D-11

SERVICE MANUAL

US Model
Canadian Model
AEP Model
UK Model
E Model
Australian Model

MEGA BASS
Discman

Model Name Using Similar Mechanism	D-12/22
CD Mechanism Name	KSM-220AAN

SPECIFICATIONS

CD section

System	Compact disc digital audio system
Laser diode properties	Material: GaAlAs Wavelength: 780 nm Emission duration: Continuous Laser output: Less than 44.6 μW (This output is the value measured at a distance of 200 mm from the objective lens surface on the Optical Pick-up Block.)
Frequency response	20–20,000 Hz ±⅓ dB (EIAJ)
Output (at 9 V input level)	Line output (stereo minijack) Output level 1 V rms at 47 kilohms Load impedance over 10 kilohms Headphones (stereo minijack) 9 mW + 9 mW at 32 ohms

General

Power requirements	DC 6 V, four size AA (LR6) alkaline batteries DC IN 9V jack accepts: • Supplied AC power adaptor • Sony CPM-100P/200P mount plate (optional) for use on 12 V car battery
Power consumption	1.2 W DC
Dimension	Approx. 138.3×40×151.5mm (5½×1⅝×6 in.) (w/h/d) incl. projecting parts and controls
Weight	Approx. 440g (1 lb) net Approx. 535g (1 lb 3 oz) incl. batteries
Supplied accessories	AC power adaptor (1) Connecting cord (1) Hand strap (1) Stereo headphone (1)
Optional accessories	Car battery cord DCC-50/DCC-120A Car connecting pack CPA-2 Mount plate CPM-100P/200P Plate arm CPM-100A/200A Active speaker SRS-77G

Design and specifications subject to change without notice.

CAUTION

Use of controls or adjustments or performance of procedures other than those specified herein may result in hazardous radiation exposure.

使用時は添付資料も参照のこと
Refer to the additional documents.

COMPACT DISC COMPACT PLAYER

SONY®

TABLE OF CONTENTS

Section	Title	Page
Specifications		1
1.	GENERAL	2
2.	SERVICING NOTES	3
	Rack Assy Installing Procedure	6
3.	ELECTRICAL ADJUSTMENTS	8
4.	DIAGRAMS	
4-1.	Semiconductor Lead Layouts	13
4-2.	Printed Wiring Boards	13
4-3.	Schematic Diagram	17
4-4.	IC Block Diagram	21
5.	EXPLODED VIEWS	23
6.	ELECTRICAL PARTS LIST	26

SECTION 1
GENERAL

LOCATION AND FUNCTION OF CONTROLS

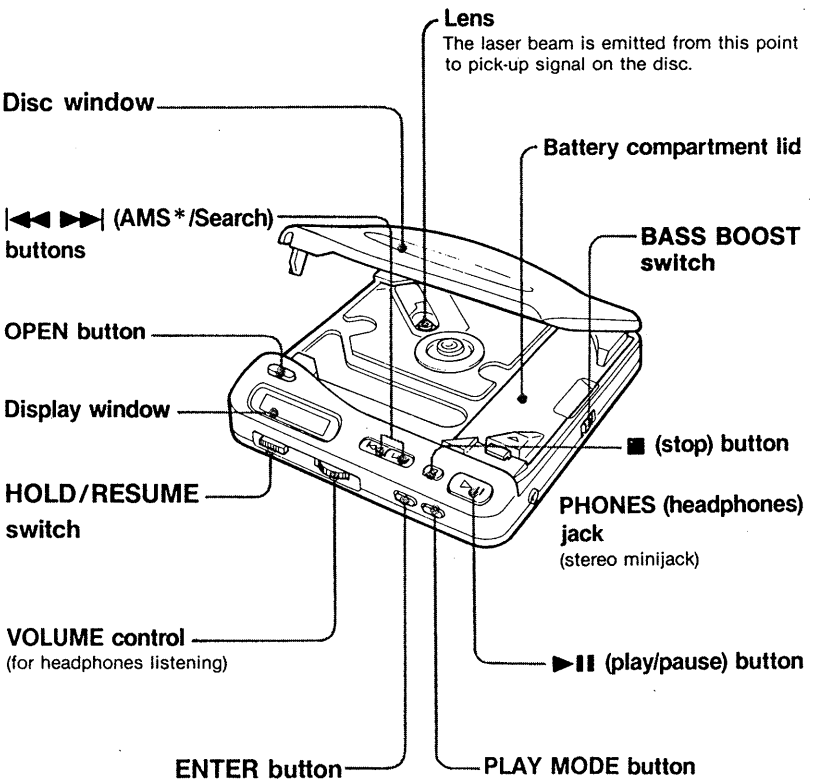

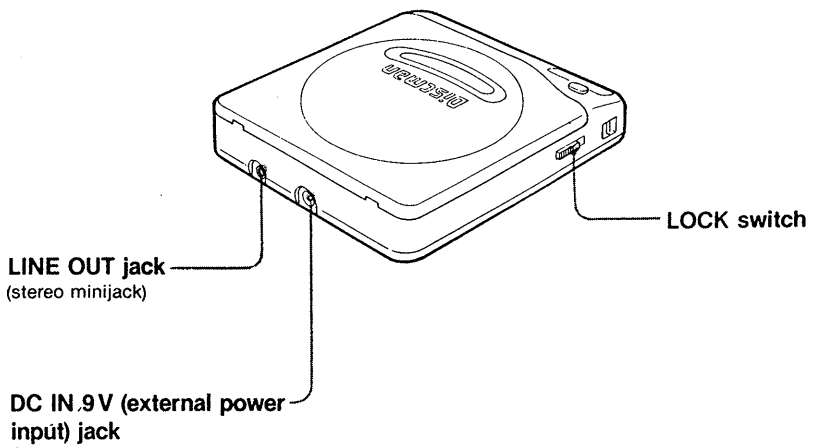

SECTION 2
SERVICING NOTES

NOTES ON HANDLING THE OPTICAL PICK-UP BLOCK OR BASE UNIT

The laser diode in the optical pick-up block may suffer electrostatic breakdown because of the potential difference generated by the charged electrostatic load, etc. on clothing and the human body.
During repair, pay attention to electrostatic breakdown and also use the procedure in the printed matter which is included in the repair parts.
The flexible board is easily damaged and should be handled with care.

Flexible Circuit Board Repairing

- Keep the temperature of the soldering iron around 270℃ during repairing.
- Do not touch the soldering iron on the same conductor of the circuit board (within 3 times).
- Be careful not to apply force on the conductor when soldering or unsoldering.

Notes on chip component replacement

- Never reuse a disconnected chip component.
- Notice that the minus side of a tantalum capacitor may be damaged by heat.

Before Replacing the Optical Block

Please be sure to check thoroughly the parameters as par the "Optical Block Checking Procedures" (Part No. : 9-960-027-11) issued separately before replacing the optical block. Note and specifications required to check are given below.

- FOK output : IC501 ⑨ pin
  When checking FOK, remove the lead wire to disc motor and unsolder and open IC801 ㉒ pin (FOK).
- S carve P-to-P value : 3Vp-p
  When checking S carve P-to-P value, remove the lead wire to disc motor.
- Adjusted part for focus gain adjustment : RV501
- RF signal P-to-P value : 0.7 – 1.25Vp-p
- Traverse signal P-to-P value : 1.5Vp-p
- The repairing grating holder is impossible.
- Adjusted part for tracking gain adjustment : RV502

SAFETY-RELATED COMPONENT WARNING!!

COMPONENTS IDENTIFIED BY MARK ⚠ OR DOTTED LINE WITH MARK ⚠ ON THE SCHEMATIC DIAGRAMS AND IN THE PARTS LIST ARE CRITICAL TO SAFE OPERATION. REPLACE THESE COMPONENTS WITH SONY PARTS WHOSE PART NUMBERS APPEAR AS SHOWN IN THIS MANUAL OR IN SUPPLEMENTS PUBLISHED BY SONY.

ATTENTION AU COMPOSANT AYANT RAPPORT À LA SÉCURITÉ!

LES COMPOSANTS IDENTIFIÉS PAR UNE MARQUE ⚠ SUR LES DIAGRAMMES SCHÉMATIQUES ET LA LISTE DES PIÈCES SONT CRITIQUES POUR LA SÉCURITÉ DE FONCTIONNEMENT. NE REMPLACER CES COMPOSANTS QUE PAR DES PIÈCES SONY DONT LES NUMÉROS SONT DONNÉS DANS CE MANUEL OU DANS LES SUPPLÉMENTS PUBLIÉS PAR SONY.

NOTES ON LASER DIODE EMISSION CHECK

The laser beam on this model is concentrated so as to be focused on the disc reflective surface by the objective lens in the optical pick-up block. Therefore, when checking the laser diode emission, observe more than 25cm away from the objective lens.

Laser Diode Check Procedure

The laser diode on this set will not emit unless the top panel is closed and S801 (leaf SW type) is turned on. The laser diode will always emit even if focus search is not performed in service mode.
The laser diode is checked using the current value which flows to the laser diode inside the optical pick-up block.

Procedure 1 (service mode or normal operation)

Check the laser diode emission with the eye.

1. Open upper panel.
2. S801 on as Fig. 1.
   (In service mode, this operation is not necessary.)
3. Press the ▶II key.
   (In service mode, this operation is not necessary.)
4. Observe the objective lens and confirm that the laser diode is emitting light. At this time, the laser diode goes on about 10 seconds due to focus serarch. If it does not, APC circuit or optical pick-up block is defective.

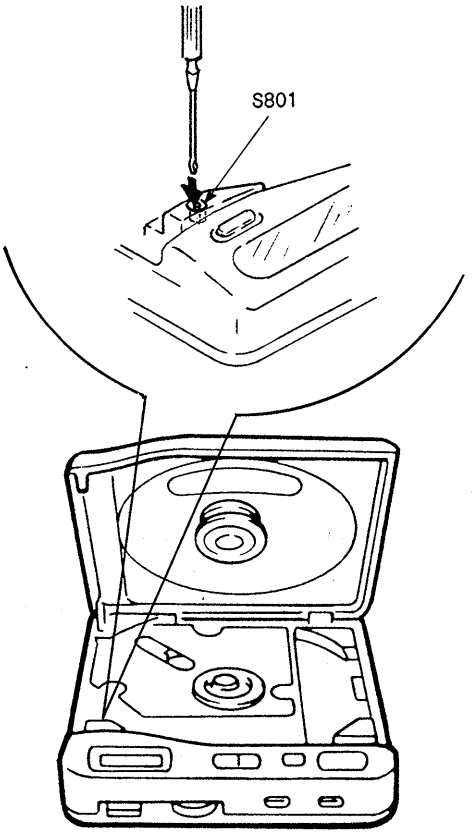

Fig.1 Turning S801 on

Procedrue 2 (service mode or normal operation)

Check by the current with flows in the laser diode.

1. Close the top panel.
2. Remove the main board and read the current value on the label affixed to the optical pick-up block.
   (Label on optical pick-up block)

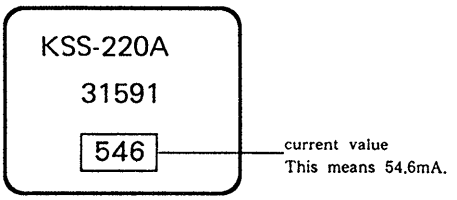

   The current value varies with the set.
3. Connect a VOM as shown in Fig. 2.
4. Press the ▶II key.
5. Calculate the current by the VOM reading.
   VOM reading (V) ÷10=current (A)
   ex. VOM reading=0.56V
   0.56÷10=0.056 (A) =56 (mA)
6. Confirm that the ammeter reading is within the range given below.
   value on label$^{+5}_{-11}$ mA (25℃)
   variation relative to temperature : 0.4mA/℃
   (Current increases when temperature rises and decreases when it drops.)

If the value is more than the range give, APC circuit has been defective or the laser diode has deteriorated.
If it is less, APC circuit or optical pick-up block is defective.

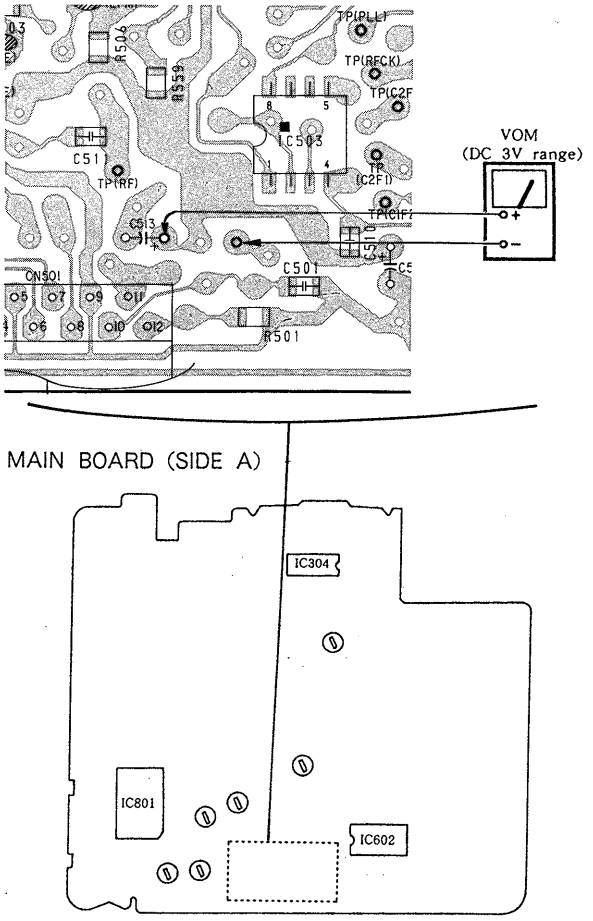

Fig.2 VOM Connection

SERVICE MODE (service program)

This set has built-in service program in the microcomputer as usual sets.
The operation method of service program is explained below.

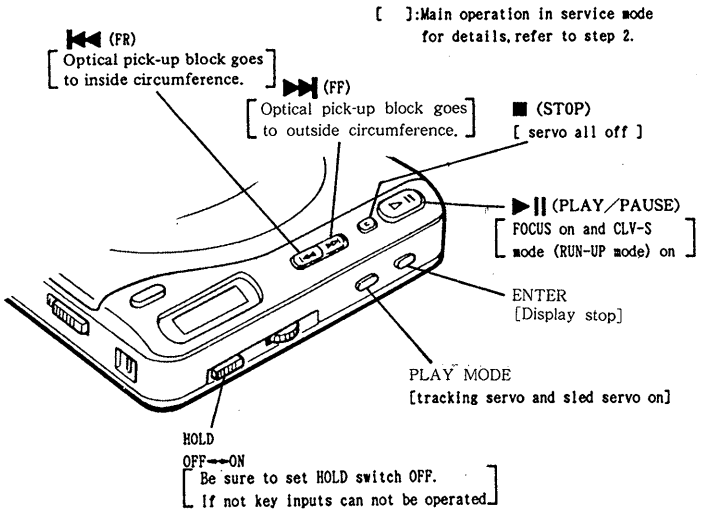

Fig.3 Key Positions

• Step 1 (Service Mode setting method)

1. Turn the HOLD switch OFF with the external power supply not plugged in (no power applied to set) and press the ▶II key.
2. Solder jumper TEST terminal.
   (IC801 pin㉔(TEST) is grounded.)
3. Plug in external power supply.
   This puts the set into service mode.

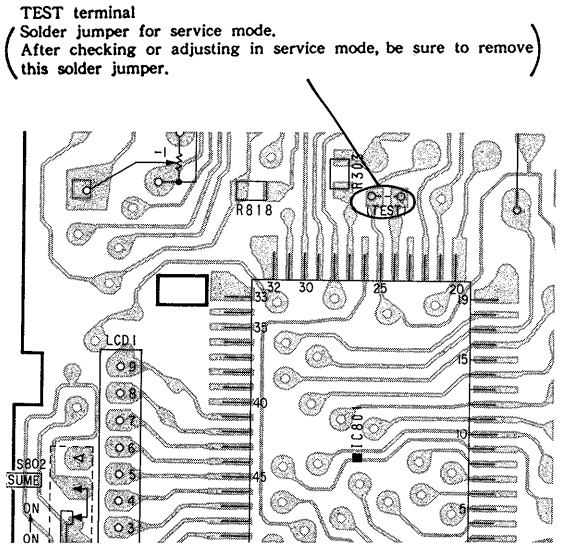

Fig.4 TEST terminal position

• Step 2 (Service Mode operation)

1. When service mode is set, the display will change 6 times, and those 6 changes will be repeated over and over.
   With this the LCD display should be present in service mode. Even if LCD dose not display, other operations will be performed.
2. When ⏭ or ⏮ key is pressed, the optical pick-up block moves to the inside or outside circumference. Tracking servo and sled servo go off when this is done, so press PLAY-MODE to turn on the tracking servo if necessary.
3. When ▶II key is pressed, CLV-S (pull-in mode) starts while performing focus search. When there is no disc installed, focus search is repeated several times while disc motor is rotating.
4. When PLAY-MODE is pressed, tracking servo, sled servo and CLV-A (servo during PLAY) go ON.
5. When 3 and 4 are performed, the disc begins to play. At this time, the top panel should be closed and S801 is to be ON. A sound is not produced as muting is ON.
6. All servo (focus, tracking, sled and spindle) go off when ■ key is pressed.

• Step 3 (Service Mode release)

1. First be sure to unplug the external power supply, then remove the solder jumper TEST terminal.
2. The set will now operated normally.

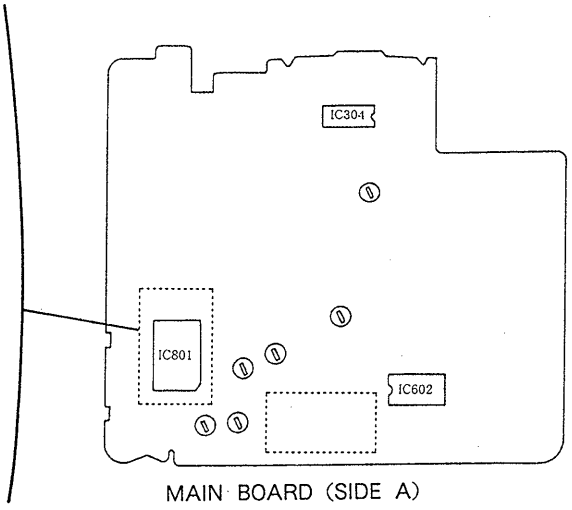

MAIN BOARD (SIDE A)

PACK ASSY INSTALLING PROCEDURE

The positioning adjustment is required when installing the rack assy.
Perform the adjustment using with rack assy positioning jig.

Description	Part No.
Rack Assy Positioning Jig	4-931-565-01

[Adjustment Procedure]

(1) Position the rack assy so that the distance A and B becomes equal by rotating the sled gear.
(A=B=6 mm)
Loosen the rack assy mounting screws.

(2) Place the positioning jig on the mechanism as shown in figure 2.
The shaft comes in the "U" gutter of jig.

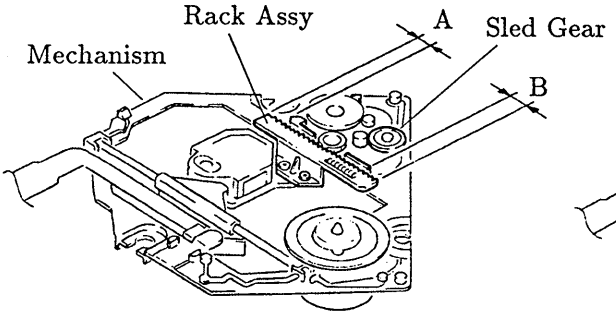

Fig-1

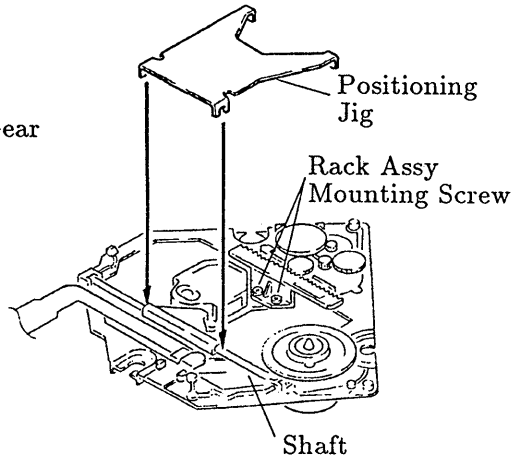

Fig-2

(3) While pressing the rack assy to the direction of arrow in order to keep the contact the teeth of rack gear with the jig, tighten the screws.

Note : Tighten the each screw alternately and little by little.

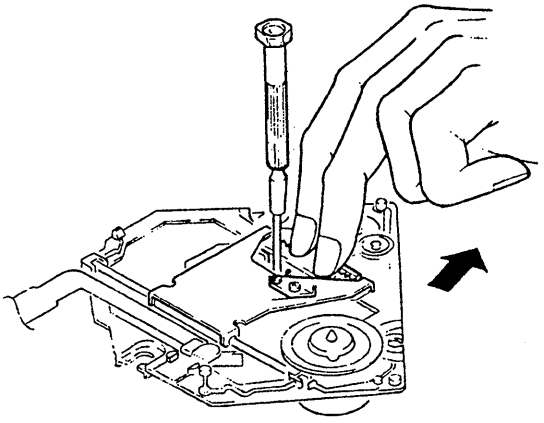

Fig-3

(4) Confirm the clearance between the teeth of rack gear and the jig as shown in figure 4.

Remove the rack assy side of jig first when removing the jig.

(Be sure not to remove it from the shaft side first.)

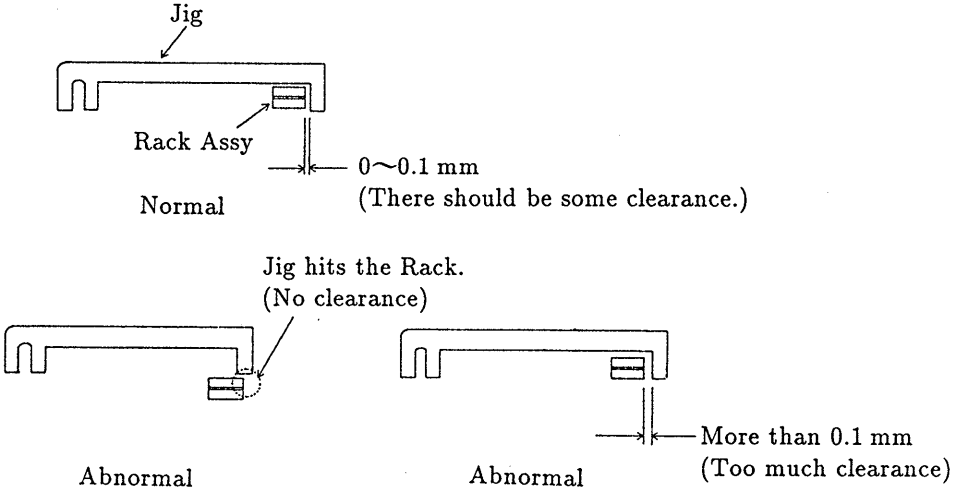

Fig-4

SECTION 3
ELECTRICAL ADJUSTMENTS

Notes on Adjustment

1. Perform adjustments in service mode.
   Be sure to release service mode after completing adjustments.
   (Refer to "Service Mode (service program)" on page 5.)
2. Perform adjustments in the order given.
3. Use YEDS-18 disc (part No. : 3-702-101-01) unless otherwise indicated.
4. Power supply voltage : DC 9V
   HOLD switch : OFF

PREPARATION

Put the set into service mode (See page 5.) and perform the following checks. Repair if there are any abnormalities.

• Sled Motor Check

1. Press the OPEN button and open the top panel.
2. Press the ⏭, ⏮ keys and make sure that the opticl pick-up block moves smoothly, without catching, from the inmost → outmost → inmost circumference.
   ⏭ : opticl pick-up block moves outward
   ⏮ : opticl pick-up block moves inward

• Focus Search Check

1. Press the OPEN button and open the top panel.
2. Press the ▶II key. (Focus search is performed continuously.)
3. Observe the opticl pick-up block objective lens and check that it moves smoothly up and down with no catching or noises.
4. Press the ■ key.
   Check that focus search operation stops. If it does not, press the ■ key again.

VC (1/2 Vcc) Connecting Point

FOCUS BIAS ADJUSTMENT
TRACKING BALANCE ADJUSTMENT

When the adjustments above are performed, connect the ⊖ side of oscilloscope to the point below.

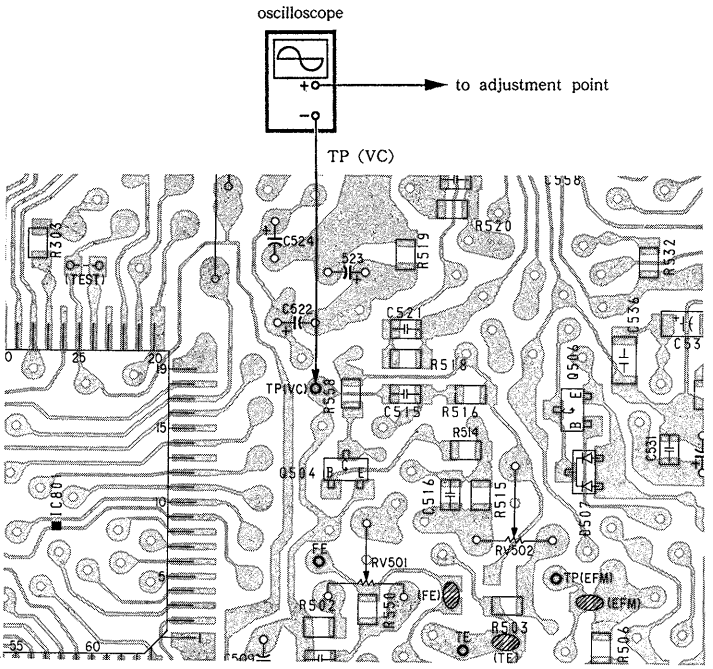

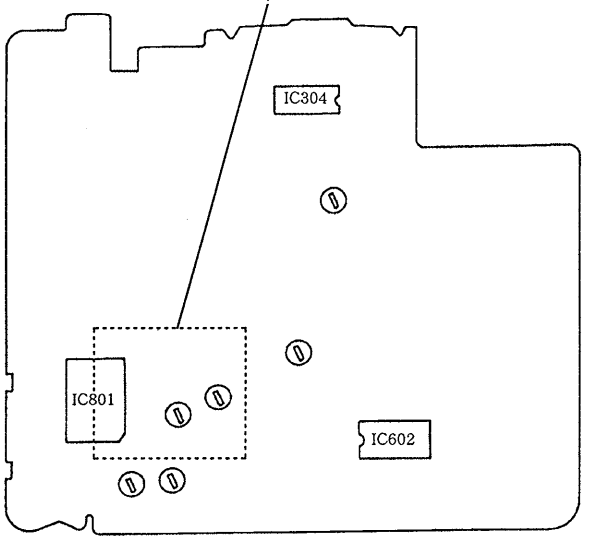

5.3V Adjustment

Adjustment Procedure :

1. Put the set into service mode (see page 5).
2. Connect the VOM to main board test point TP (+5.3V).
3. Adjust RV401 for 5.2V−5.3V reading on the VOM.
4. After adjustment, release service mode (see page 5).

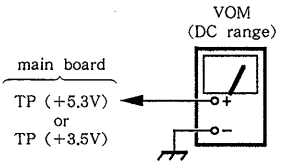

3.5V Adjustment

Adjustment Procedure :

1. Put the set into service mode (see page 5).
2. Connect the VOM to main board test point TP (+3.5V).
3. Adjust the pattern connection (Ⓐ or Ⓑ) to obtain 3.45V to 3.6V reading on the VOM.

pattern connection		VOM reading
A	B	
○	×	down
×	×	↕
×	○	
○	○	up

○: short × : open

Adjustment Location : main board

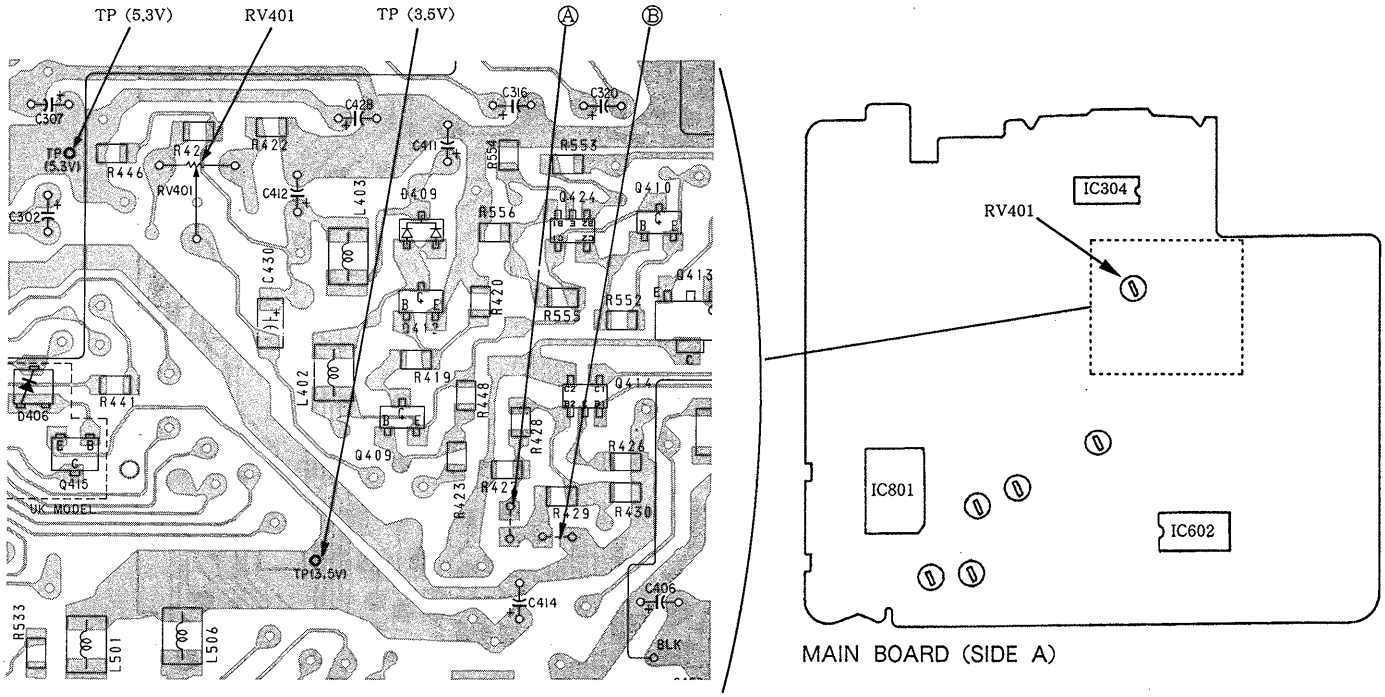

PLL Free Run Frequency Check and Adjustment

Check／Adjustment Procedure :

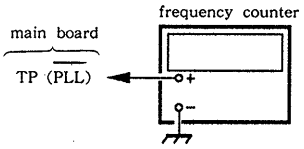

1. Disconnect EFM solder jumper terminal in the diagram below.
2. Connect a frequency counter to main board test point TP ($\overline{\text{PLL}}$).
3. Put the set into service mode (See page 5).
4. Check that the frequency counter reading is 4.32±0.01 MHz. If not, adjust RV505 so that it is 4.32±0.01MHz.
5. After adjustment, release service mode (see page 5).
6. Short the jumper terminal disconnected in step 1.

Check／Adjustment Location : main board

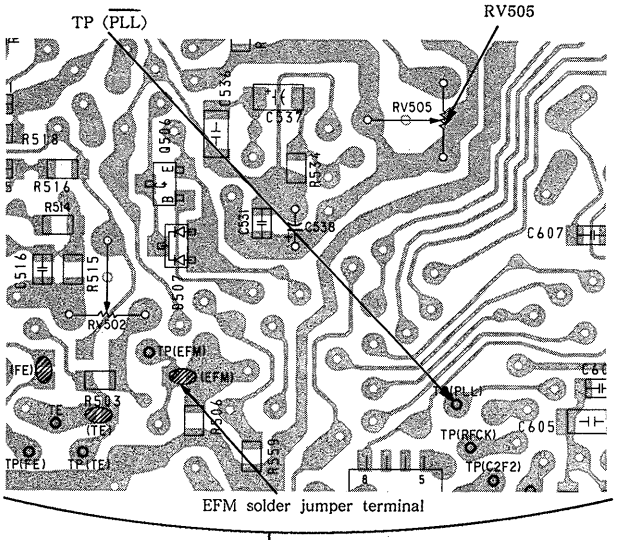

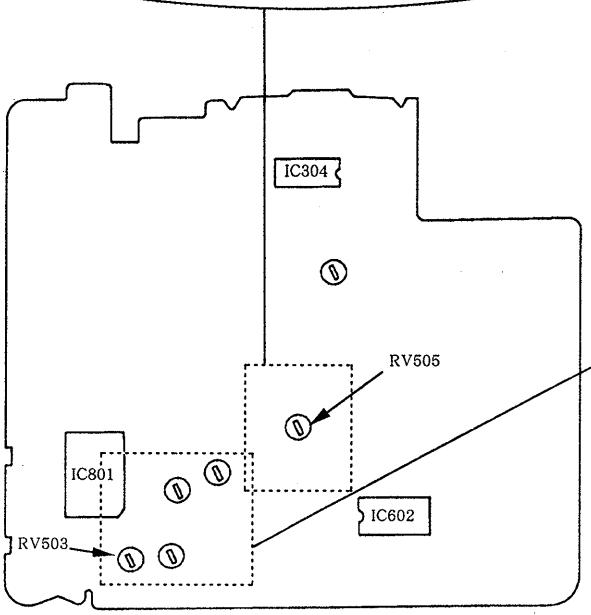

MAIN BOARD (SIDE A)

Tracking Balance Adjustment

Conditions :

The set should be placed either horizontally.

Adjustment Procedure :

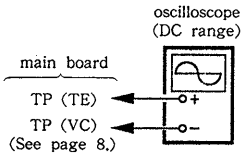

1. Connect the oscilloscope to main board TP (TE).
2. Put the set into service mode (See page 5.)
3. Press the ⏭ and ⏮ keys to move the opticl pick-up block to the center.
4. Insert the disc (YEDS-18) and close the top panel.
5. Press the ▶II key.
   (It will go from focus search to focus on, and CLV pull-in mode state. Tracking and sled are OFF.)
6. Adjust RV503 so that the oscilloscope wavaform is symmetrical on the top and bottom in relation to 0V.

Note : Take sweep time as long as possible to obtain best waveform.

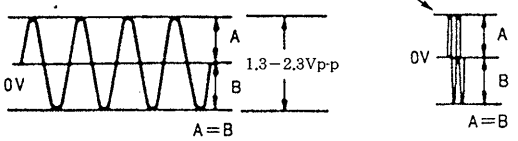

7. Press the ■ key.
8. After adjustment, release service mode (see page 5).

Adjustment Location : main board

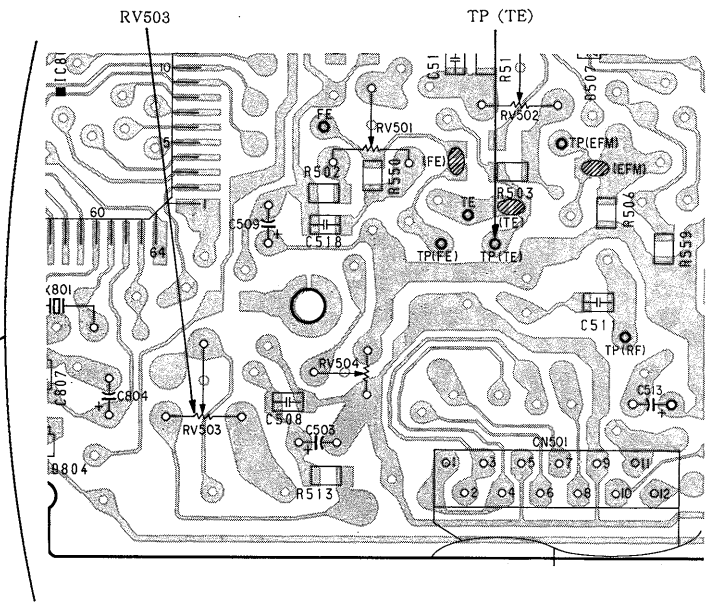

Focus Bias Adjustment

Conditions :
The set should be placed either horizontally.

Adjustment Procedure :

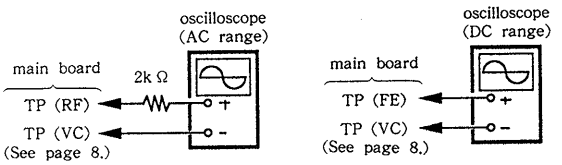

1. Put the set into service mode (See page 5).
2. Connect the oscilloscope to main board test point TP (RF).
3. Press the ⏭ and ⏮ key to move the optical pick-up block to the center. (Move the optical pick-up block to the music area on the disc to enable easy visibility of the eye pattern).
4. Insert the disc (YEDS-18) and close the top panel.
5. Press the ▶II key.
   (It will go from focus search to focus on, and CLV pull-in mode state. Tracking and sled are OFF.)
6. Press the KEY-MODE button (Tracking and sled go ON.)
7. Adjust RV504 so that the oscilloscope waveform eye pattern is good. A good eye pattern means that the diamond shape (◇) in the center of the waveform can be clearly distinguished.

• RF Signal Reference Waveform (eye pattern)
VOLT/DIV : 200mV
TIME/DIV : 500nS

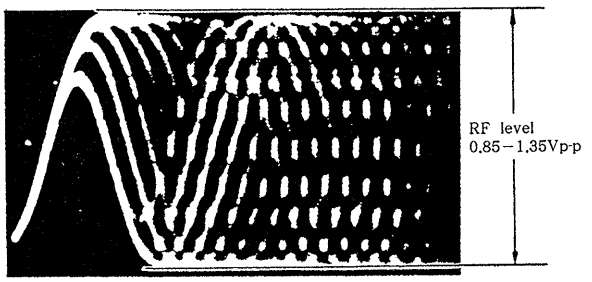

When observing the eye pattern, set the oscilloscope for AC range and raise vertical sensitivity.

8. Press the ■ key.
9. Remove the disc and connect the oscilloscope to main board TP (FE).
10. Adjust RV504 again refering to the table followed.

voltage of TP (FE)	Do not adjust again.
+80 to 200mV	Adjust RV504 again for +200mV reading on oscilloscope.
−20 to +80mV	Adjust RV504 again for −20mV reading on oscilloscope.

11. After adjustment, release service mode (see page 5).

Adjustment Location : main board

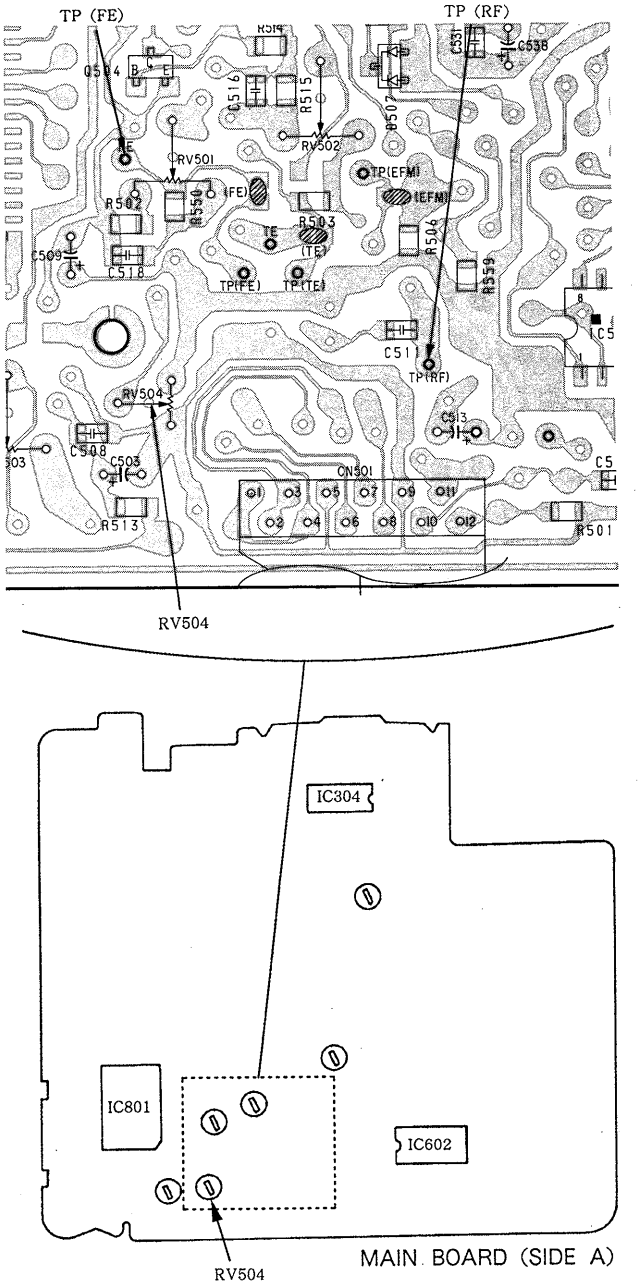

Reference

Focus/Tracking Gain Adjustment

A frequency responce analyzer or CD jig is necessary in order to perform this adjustment exactly.

However, this gain has a margin, so even if it is slightly off, there is no problem. Therefore, do not perfrom this adjustment.

Focus/tracking gain determines the pick-up followup (vertical and horizontal) relative to mechanical noise and mechanical shock when the 2-axis device operate.
However, as these reciprocate, the adjustment is at the point where both are satisfied.

- When gain is high, the noise when the 2-axis device operates increases.
- When gain is low, it is more susceptible to mechanical shock and skipping occurs more easily.

This adjustment is to be performed when replacing the following parts :

- UPF (optical pick-up block)
- RV501 (focus gain volume)
- RV502 (tracking gain volume)

On this set, it is very difficult to simplify this adjustment. For those sets on which symptoms such as "occasional skipping" are hard to discover, or it is hard to tell if the set has been repaired, use the CD jig and perform this adjustment. Refer to the diagram below for connection of the CD jig. The adjustment procedure is described in the separate CD jig Instruction Manual.

Please be careful no to move RV501 (focus gain volume), RV502 (tracking gain volume) ordinarily.

MAIN BOARD (SIDE A)

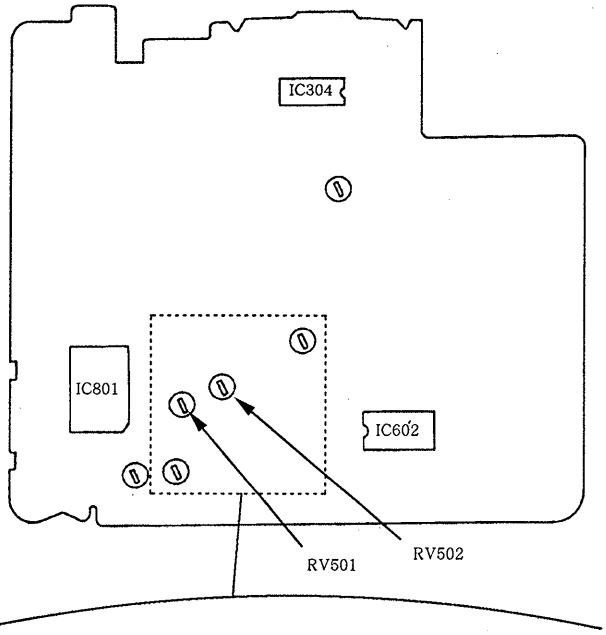

CD jig connection :

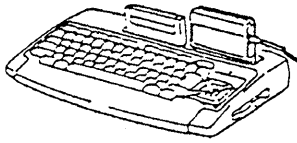

CD jig

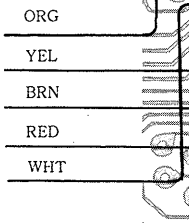

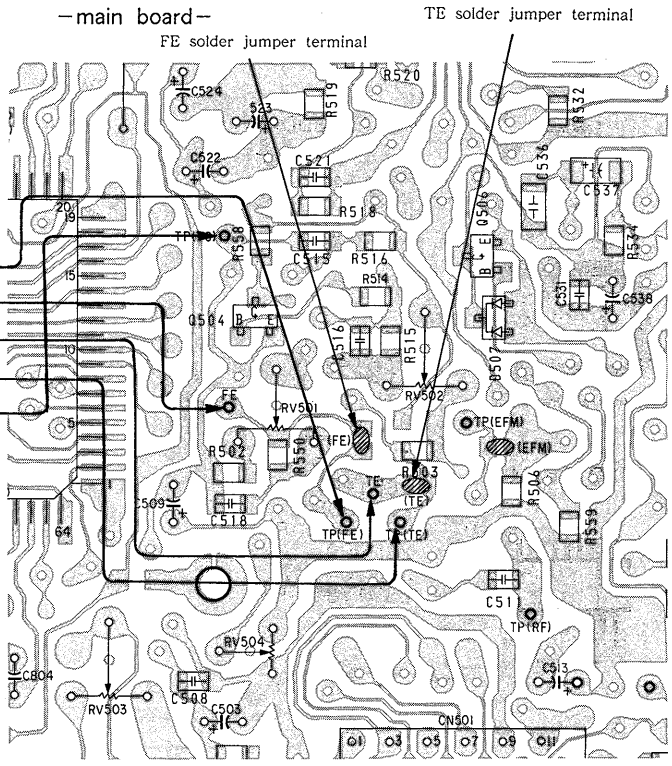

Remove the solder jumpers at the TE and FE locations and connect the CD jig.

SECTION 4
DIAGRAMS

4-1. SEMICONDUCTOR LEAD LAYOUTS

BA10358F
BA4560F

CXK5816M-15L

FMW1

BA3570F

CXP5024-111Q

2SD1758F5-QR

CXA1271Q

MPC1715FJ

E10QS04

CXA1272Q-Z

M51568FP

IMN10

RC5532DD

MA152WK

CXD1130Q

DTA114EK
DTA124EK
DTA144TK
DTC114EK
DTC114TK
DTC144TK
2SA1162
2SB1197K-R
2SB1308-R
2SC2412K-R
2SD999
2SD1048X7
2SD1781K-R

RB411D
RB10M-B1
RD7.5M-B1
SB01-05CP

CXD1161M-3

RD9.1EW

• SEMICONDUCTOR LOCATION

Ref. No.	Location	Ref. No.	Location
IC301	E-21	Q503	H-22
IC302	E-23	Q504	H-5
IC303	E-22	Q506	H-6
IC304	C-7	Q507	F-3
IC501	J-22	Q801	J-24
IC502	G-21	Q802	K-2
IC503	J-7	Q803	E-3
IC504	I-16	Q805	F-3
IC505	H-15	Q806	J-3
IC601	I-19	Q807	G-3
IC602	I-9		
IC801	I-3	D401	G-12
IC802	H-24	D402	G-11
		D403	F-17
		D406	F-7
Q102	F-4	D409	F-9
Q103	C-24		
Q202	F-4	D501	H-15
Q203	D-25	D502	H-15
Q409	F-9	D503	H-15
		D504	I-15
Q410	E-10	D505	H-21
Q412	E-9		
Q413	E-11	D507	H-6
Q414	F-10	D508	C-3
Q415	F-7	D601	H-9
		D801	I-23
Q423	E-18	D803	I-24
Q424	E-10		
Q425	E-18	D804	K-3
Q451	E-18	D805	F-26
Q453	F-11	D806	G-24
		D807	I-24
Q501	J-20		
Q502	K-20		

Note :

- ○— : parts extracted from the component side.
- ■ : parts mounted on the conductor side.
- ◇ : Through hole.
- ▒ : Pattern on the side which is seen.
- ▒ : Pattern of the rear side.
- ▭ : Chip components extracted from the rear side.

4-2. PRINTED WIRING BOARDS

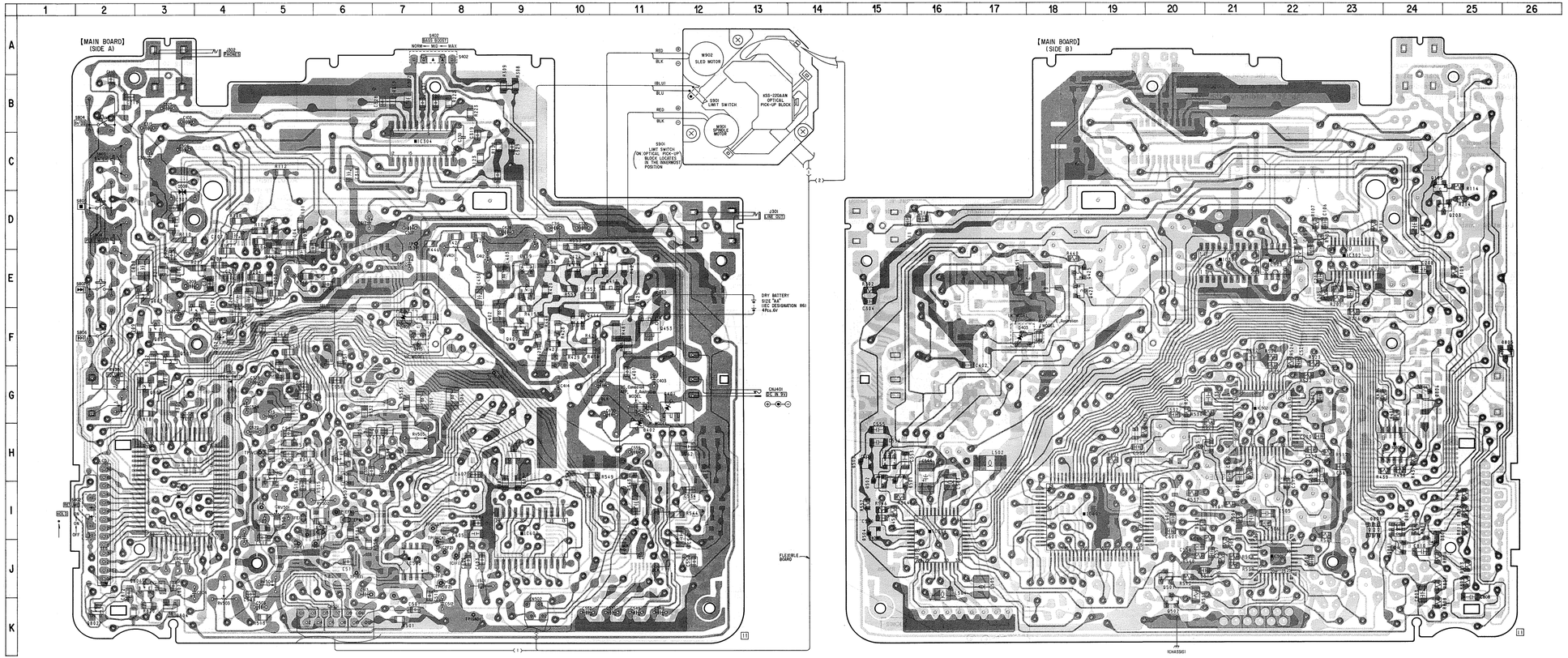

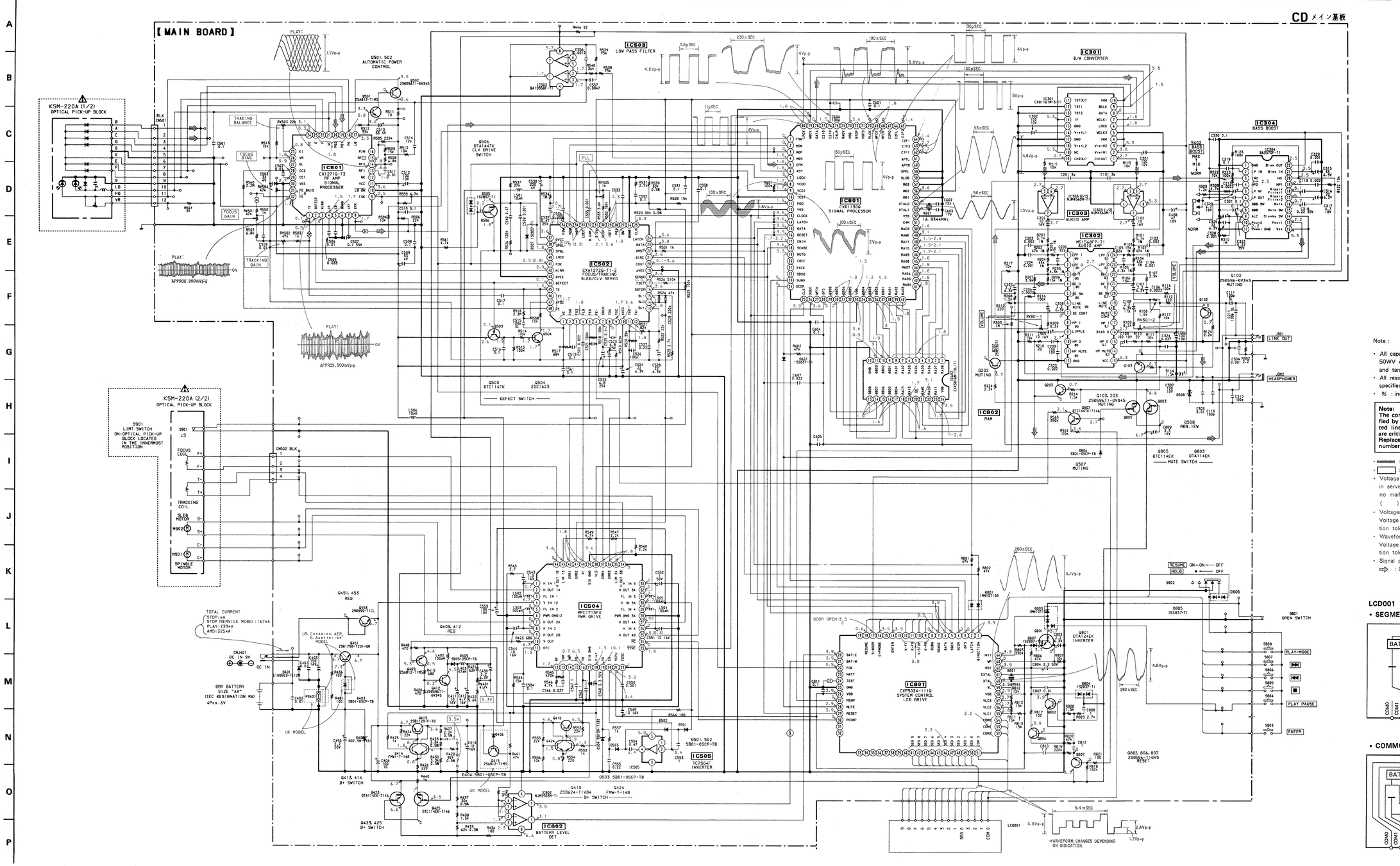

Note :

- All capacitors are in μF unless otherwise noted. pF : μμF 50WV or less are not indicated except for electrolytics and tantalums.
- All resistors are in Ω and ¼W or less unless otherwise specified.
- % : indicates tolerance.

Note: The components identified by mark ⚠ or dotted line with mark ⚠ are critical for safety. Replace only with part number specified.	Note: Les composants identifiés par une marque ⚠ sont critiques pour la sécurité. Ne les remplacer que par une pièce portant le numéro spécifié.

- ▬▬ : B+ Line
- ▭ : adjustment for repair.
- Voltage and waveforms are dc with respect to ground in service mode. (See page 5 for set up service mode.)
  no mark : STOP
  ( ) : PLAY
- Voltages are taken with a VOM (Input impedance 10M Ω). Voltage variations may be noted due to normal production tolerances.
- Waveforms are taken with a oscilloscope. Voltage variations may be noted due to normal production tolerances.
- Signal path.
  ⇨ : CD

LCD001

• SEGMENT

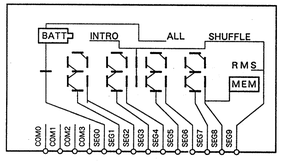

• COMMON

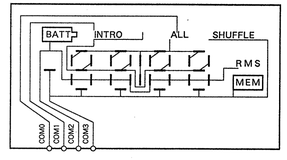

IC301
CXD1161M

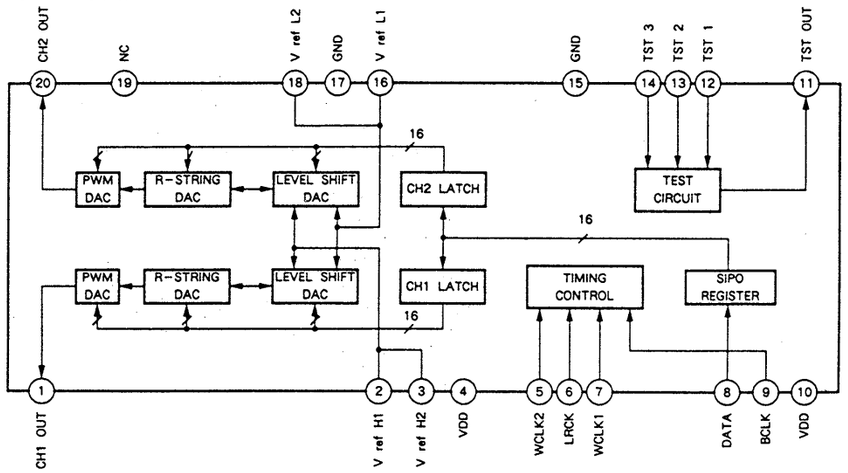

IC501
CXA1271Q

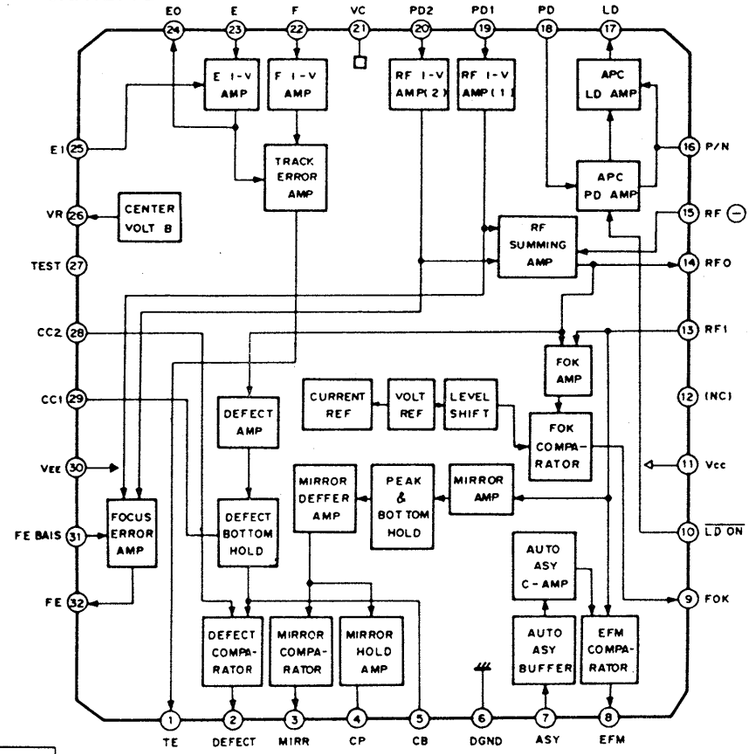

IC502
CXA1272Q-Z

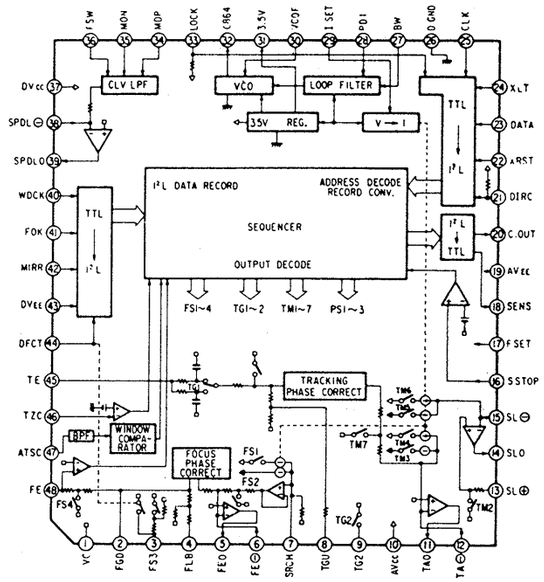

IC601
CXD1130Q

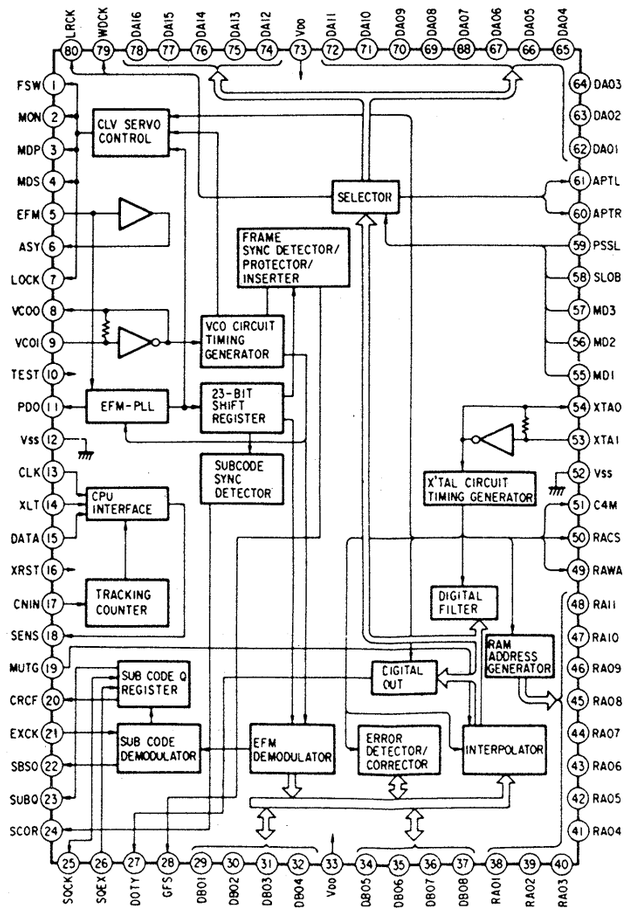

IC302
M51568FP

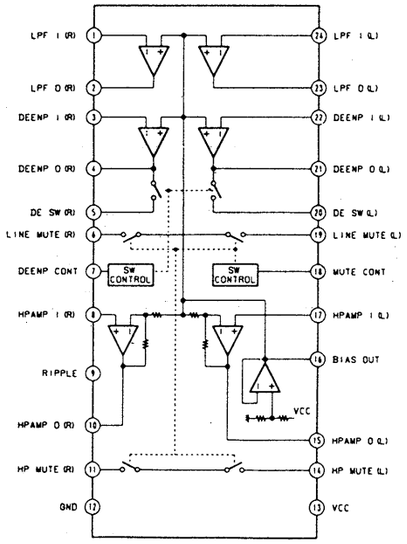

IC304
BA3570F

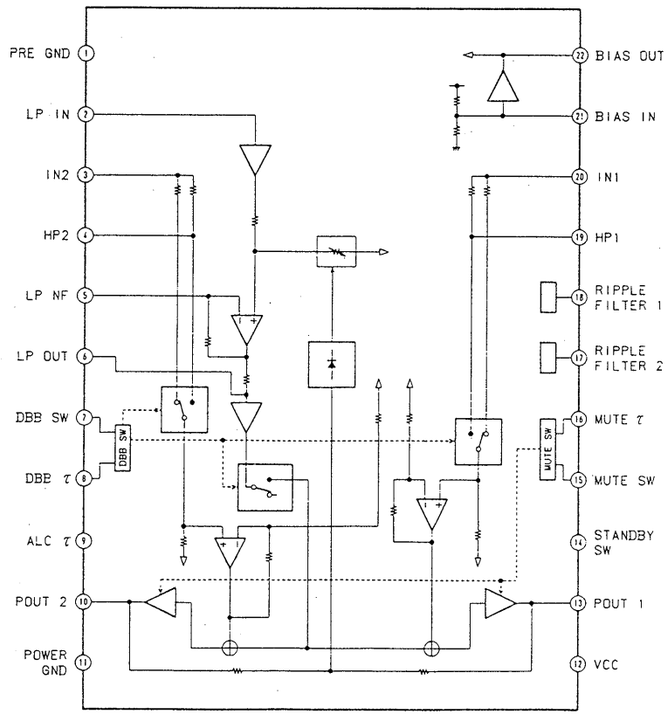

IC504
MPC1715

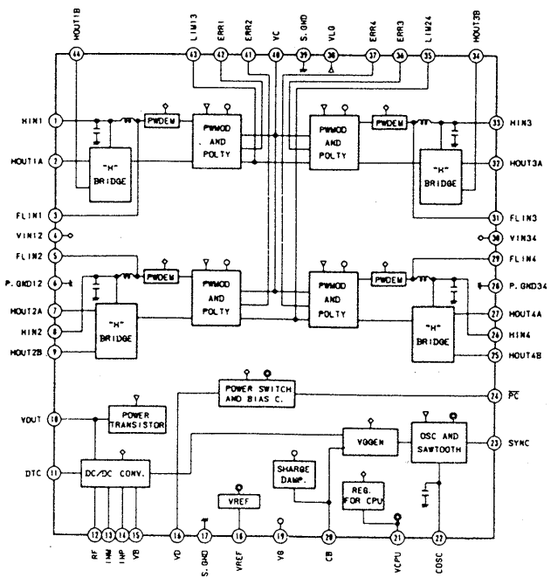

SECTION 5
EXPLODED VIEWS

NOTE:

- The mechanical parts with no reference number in the exploded views are not supplied.
- The construction parts of an assembled part are indicated with a collation number in the remark column.
- Items marked "★" are not stocked since they are seldom required for routine service. Some delay should be anticipated when ordering these items.
- Due to standardization, parts with part number suffix -XX and -X may be different from the parts specified in the components used on the set.
- Color Indication of Appearance Parts Example:
  (RED) . . . KNOB, BALANCE (WHITE)
  ↑ Cabinet's Color ↑ Parts' Color

The components identified by mark ⚠ or dotted line with mark ⚠ are critical for safety.
Replace only with part number specified.

Les composants identifiés par une marque ⚠ sont critiques pour la sécurité.
Ne les remplacer que par une pièce portant le numéro spécifé.

5-1. GENERAL SECTION (1)

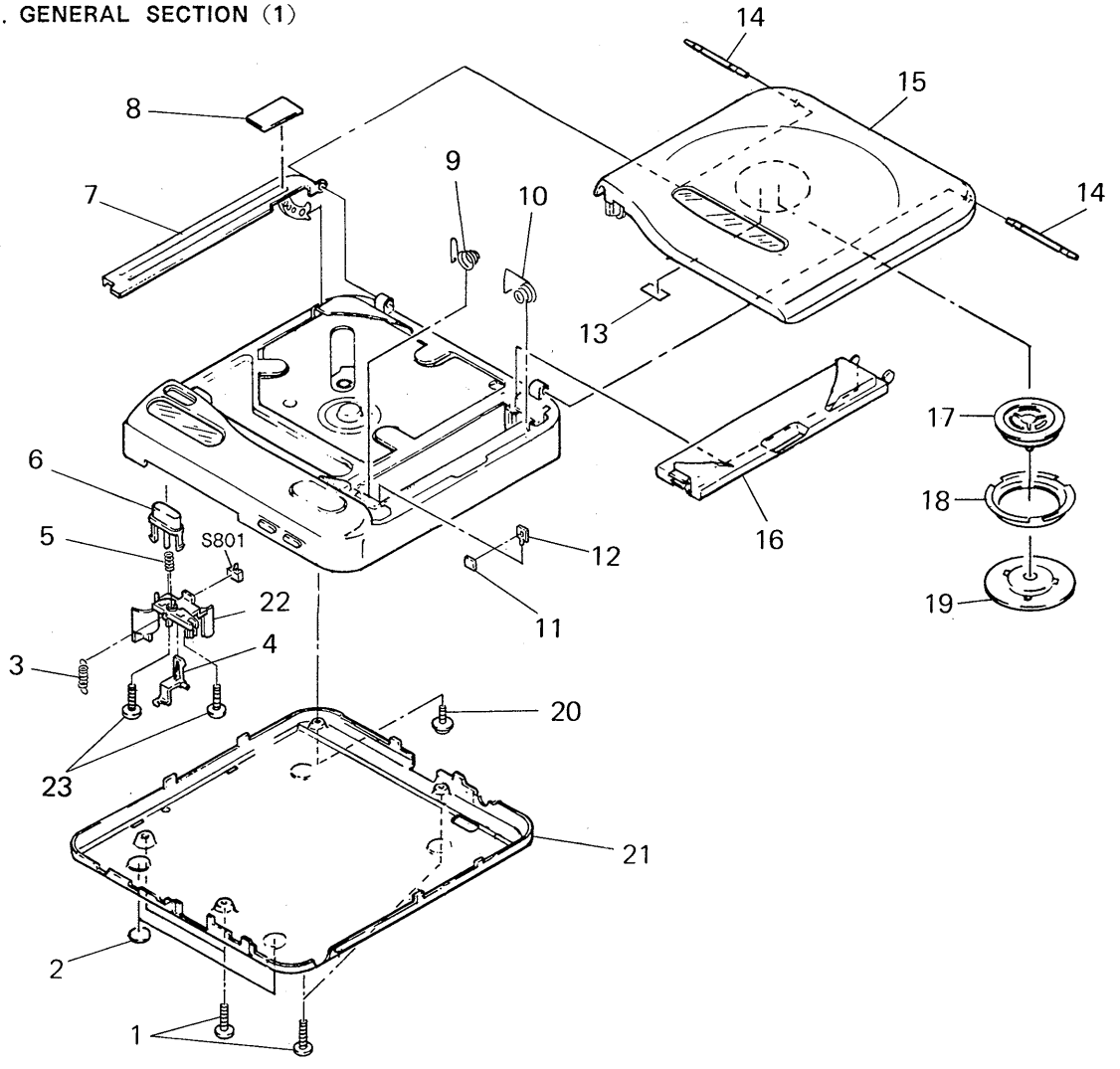

No.	Part No.	Description	Remarks
1	2-370-905-41	SCREW (B) (2X10), TAPPING	
2	4-912-641-01	FOOT, RUBBER	
3	4-941-062-01	SPRING, TENSION	
4	4-938-814-01	CLAW, LID LOCK	
5	4-938-821-01	SPRING, COMPRESSION	
6	4-938-828-01	BUTTON (OPEN)	
7	4-938-816-01	ARM, SWITCHING	
8	3-884-241-01	SHEET (C), ADHESIVE	
9	4-926-627-01	SPRING (A)	
10	2-298-630-11	SPRING (R)	
11	4-931-559-01	SPACER, BATTERY TERMINAL	
12	3-881-922-11	BOARD, TERMINAL	
13	3-682-518-00	CUSHION	
14	4-926-626-01	SHAFT, FULCRUM	
15	X-4938-802-1	PANEL ASSY, UPPER	
16	4-926-619-01	LID, BATTERY CASE	
17	4-926-608-01	PLATE (M), CHUCK	
18	4-926-609-01	RETAINER, CHUCK PLATE	
19	X-4924-729-1	PLATE ASSY, CHUCK	
20	3-703-925-11	SCREW (M1.4X2.8)	
21	X-4938-803-1	PANEL ASSY, BOTTOM	
22	4-938-818-01	BASE, OPEN	
23	4-908-792-71	SCREW(B2×6), TAPPING, P1	
S801	1-571-099-11	SWITCH (OPEN)	

REVISED

5-2. GENERAL SECTION (2)

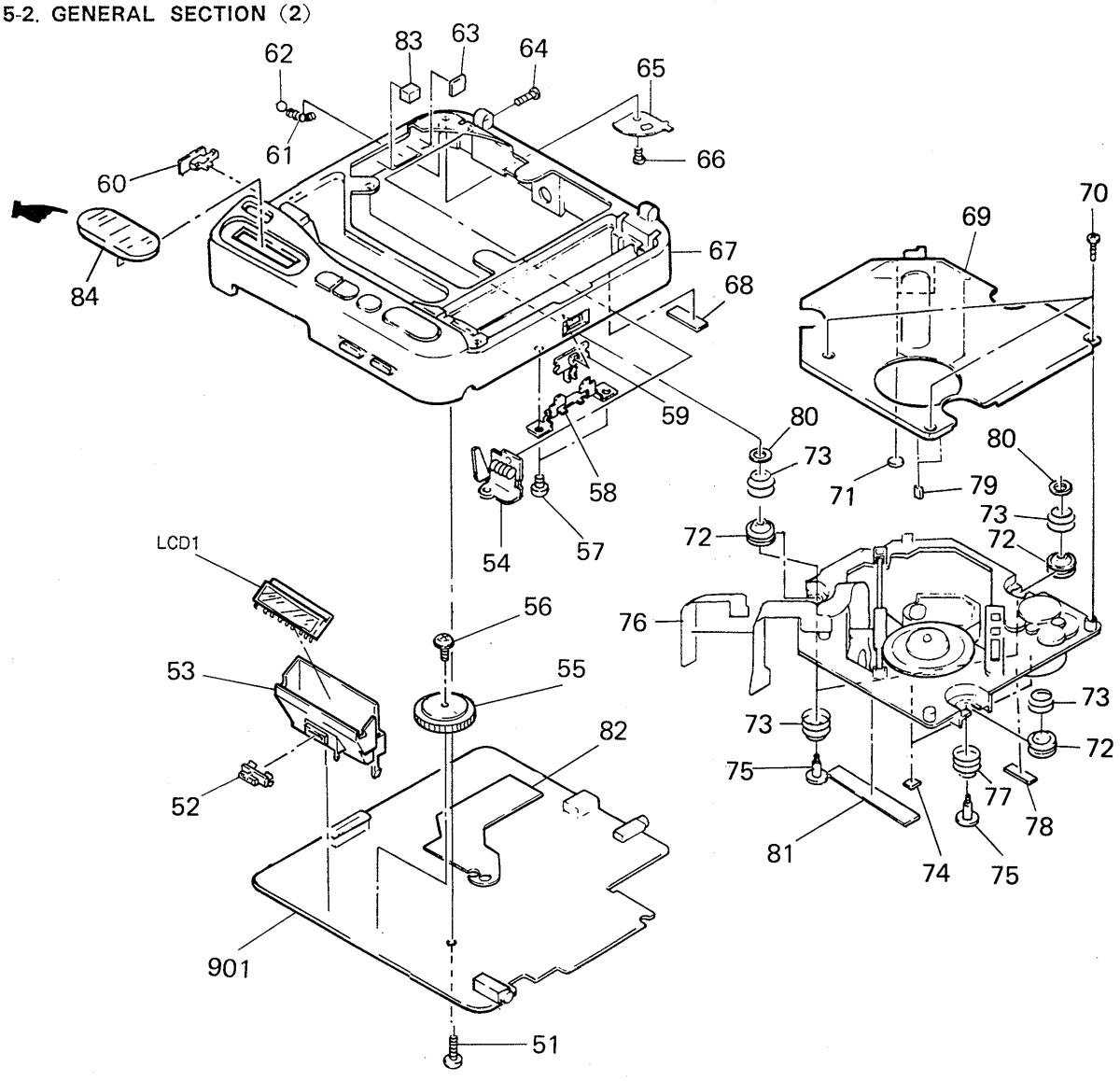

No.	Part No.	Description	Remarks
51	4-908-792-71	SCREW (B2X6), TAPPING, P1	
52	4-938-813-01	KNOB (HOLD)	
53	4-938-815-01	HOLDER (LCD)	
54	*X-4924-723-1	SPRING ASSY, OPEN	
55	4-938-812-01	KNOB (VOLUME)	
56	3-335-797-21	SCREW (M1.4X3), TOOTHED LOCK	
57	3-318-203-62	SCREW (B1.7X4), TAPPING	
58	*4-931-520-11	PLATE (DBB), FIXED	
59	4-931-521-01	KNOB (DBB)	
60	4-938-831-01	KNOB (SAFETY)	
61	4-926-633-01	SPRING (BALL), COMPRESSION	
62	7-671-155-01	STEEL BALL 3.0	
63	*4-926-660-01	SPACER (K)	
64	3-703-816-52	SCREW (M1.4X3.5), SPECIAL HEAD	
65	4-926-612-01	RETAINER, BALL	
66	4-908-792-01	SCREW (B2X3), TAPPING, P1	
67	X-4938-801-1	CABINET ASSY	
68	*4-926-115-01	CUSHION (P)	

No.	Part No.	Description	Remarks
69	4-924-735-01	COVER, MD	
70	3-893-942-01	SCREW (1.7X4), TAPPING (B)	
71	4-917-784-01	SPACER (S)	
72	4-924-705-01	INSULATOR	
73	4-924-710-01	SPRING, COMPRESSION	
74	9-911-839-XX	SPACER (C)	
75	4-924-718-01	SCREW, INSULATOR	
76	4-924-761-01	PAPER (A), SHIELD	
77	4-926-659-01	SPRING, COMPRESSION	
78	*3-561-902-11	CLOTH, RETAINING, CASSETTE	
79	*3-329-460-01	SPACER	
80	4-917-785-01	SPACER	
81	*4-941-035-01	SHEET, BLIND	
82	*4-941-036-01	SHEET (PC BOARD), BLIND	
83	9-911-839-XX	SPACER	
901	A-3015-916-A	(US,Canadian,AEP,E,Australian) ...PC BOARD ASSY, MAIN	
	A-3015-917-A	(UK).....PC BOARD ASSY, MAIN	
LCD1	1-809-028-11	DISPLAY PANEL LIQUID CRYSTAL	
84	4-938-830-01	WINDOW (LCD)	

REVISED

5-3. MECHANISM SECTION (KSM-220AAN)

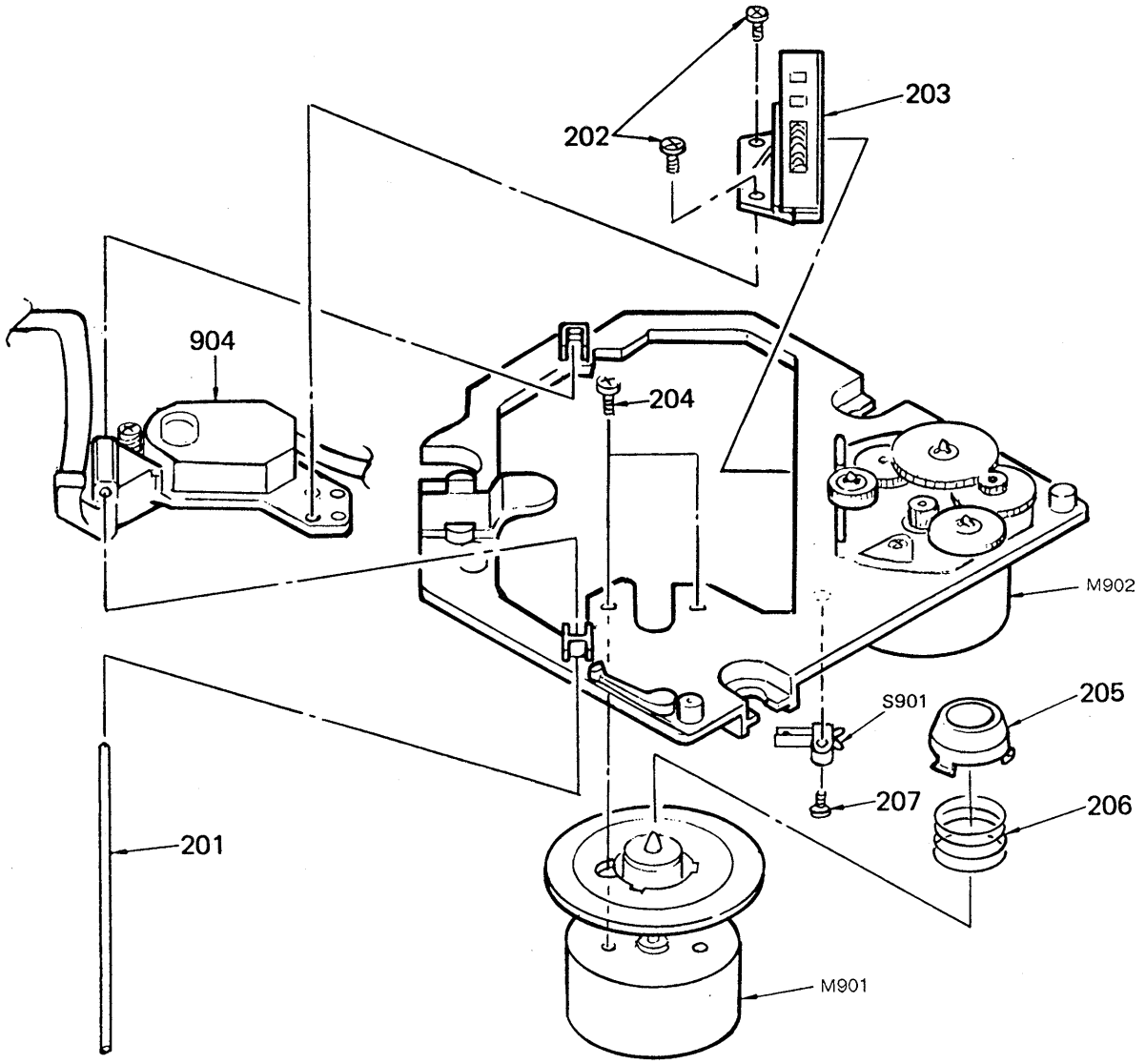

Ref.No	Part No.	Description	Remark
201	*2-641-534-01	SHAFT	
202	2-641-383-01	SCREW (M1.7X4) (NK), TOOTH	
203	X-2641-528-1	RACK ASSY	
204	7-627-552-88	SCREW, PRECISION +P 1.7X2.2	
205	2-641-539-01	RING, CENTER	
206	2-641-524-01	SPRING (A), COMPRESSION	
207	7-685-103-19	SCREW +P 2X5 TYPE2 NON-SLIT	
~~904~~	~~⚠8-848-151-01~~	~~DEVICE, OPTICAL KSM-220AAN~~	
M901	X-2641-521-1	MOTOR ASSY, T.T. (SPINDLE)	
M902	X-2641-537-2	MOTOR ASSY (SLED)	
S901	1-570-112-11	SWITCH, LEAF (LIMIT)	
904	⚠8-848-142-11	DEVICE, OPTICAL KSS-220A(RP)	

Note:
The components identified by mark ⚠ or dotted line with mark ⚠ are critical for safety. Replace only with part number specified.

Note:
Les composants identifiés par une marque ⚠ sont critiques pour la sécurité. Ne les remplacer que par une pièce portant le numéro spécifié.

SECTION 6
ELECTRICAL PARTS LIST

NOTE:

- Due to standardization, replacements in the parts list may be different from the parts specified in the diagrams or the components used on the set.
- Items marked "★" are not stocked since they are seldom required for routine service. Some delay should be anticipated when ordering these items.
- If there are two or more same circuits in a set such as a stereophonic machine, only typical circuit parts may be indicated and capacitors and resistors in other same circuits may be omitted.

CAPACITORS:
MF: μF, PF: μμF.

RESISTORS
- All resistors are in ohms.
- F: nonflammable

COILS
- MMH: mH, UH: μH

SEMICONDUCTORS
In each case, U: μ, for example:
UA...: μA..., UPA...: μPA...,
UPC...: μPC, UPD...: μPD...

The components identified by mark ⚠ or dotted line with mark ⚠ are critical for safety.
Replace only with part number specified.

Les composants identifiés par une marque ⚠ sont critiques pour la sécurité.
Ne les remplacer que par une pièce portant le numéro spécifié.

Ref.No.	Part No.	Description			
901	A-3015-916-A	(US,Canadian,AEP,E,Australian) ...PC BOARD ASSY, MAIN			
	A-3015-917-A	(UK).....PC BOARD ASSY, MAIN			
904	⚠8-848-151-01	DEVICE, OPTICAL KSM-220AAN			
C101	1-163-086-00	CERAMIC CHIP	3PF	0.25PF	50V
C102	1-126-157-11	ELECT	10MF	20%	16V
C103	1-163-212-00	CERAMIC CHIP	0.002MF	5%	50V
C104	1-163-205-00	CERAMIC CHIP	0.001MF	5%	50V
C105	1-163-115-00	CERAMIC CHIP	82PF	5%	50V
C106	1-164-161-11	CERAMIC CHIP	0.0022MF	10%	50V
C107	1-135-149-21	TANTAL. CHIP	2.2MF	20%	6.3V
C108	1-135-149-21	TANTAL. CHIP	2.2MF	20%	6.3V
C109	1-124-584-00	ELECT	100MF	20%	10V
C110	1-163-117-00	CERAMIC CHIP	100PF	5%	50V
C111	1-163-117-00	CERAMIC CHIP	100PF	5%	50V
C113	1-164-161-11	CERAMIC CHIP	0.0022MF	10%	50V
C201	1-163-086-00	CERAMIC CHIP	3PF	0.25PF	50V
C202	1-126-157-11	ELECT	10MF	20%	16V
C203	1-163-212-00	CERAMIC CHIP	0.002MF	5%	50V
C204	1-163-205-00	CERAMIC CHIP	0.001MF	5%	50V
C205	1-163-115-00	CERAMIC CHIP	82PF	5%	50V
C206	1-164-161-11	CERAMIC CHIP	0.0022MF	10%	50V
C207	1-135-149-21	TANTAL. CHIP	2.2MF	20%	6.3V
C208	1-135-149-21	TANTAL. CHIP	2.2MF	20%	6.3V
C209	1-124-584-00	ELECT	100MF	20%	10V
C210	1-163-117-00	CERAMIC CHIP	100PF	5%	50V
C211	1-163-117-00	CERAMIC CHIP	100PF	5%	50V
C213	1-164-161-11	CERAMIC CHIP	0.0022MF	10%	50V
C301	1-124-584-00	ELECT	100MF	20%	10V
C302	1-124-584-00	ELECT	100MF	20%	10V
C303	1-164-232-11	CERAMIC CHIP	0.01MF	10%	50V
C304	1-163-009-11	CERAMIC CHIP	0.001MF	10%	50V
C305	1-126-157-11	ELECT	10MF	20%	16V
C306	1-124-584-00	ELECT	100MF	20%	10V
C307	1-124-584-00	ELECT	100MF	20%	10V
C315	1-124-229-00	ELECT	33MF	20%	6.3V
C316	1-131-379-00	TANTALUM	22MF	10%	6.3V
C317	1-131-375-00	TANTALUM	4.7MF	10%	10V
C318	1-135-072-21	TANTAL. CHIP	0.22MF	20%	35V
C319	1-163-038-00	CERAMIC CHIP	0.1MF		25V
C320	1-126-094-11	ELECT	4.7MF	20%	16V
C321	1-163-038-00	CERAMIC CHIP	0.1MF		25V
C322	1-135-072-21	TANTAL. CHIP	0.22MF	20%	35V
C323	1-163-986-00	CERAMIC CHIP	0.027MF	10%	25V
C324	1-163-986-00	CERAMIC CHIP	0.027MF	10%	25V
C325	1-126-153-11	ELECT	22MF	20%	6.3V
C328	1-163-141-00	CERAMIC CHIP	0.001MF	5%	50V
C329	1-163-141-00	CERAMIC CHIP	0.001MF	5%	50V
C330	1-164-159-11	CERAMIC	0.1MF		
C401	1-164-232-11	CERAMIC CHIP	0.01MF	10%	50V
C402	1-164-232-11	CERAMIC CHIP	0.01MF	10%	50V
C403	1-126-357-11	ELECT	150MF	20%	16V
C406	1-124-584-00	ELECT	100MF	20%	10V
C411	1-126-157-11	ELECT	10MF	20%	16V
C412	1-126-094-11	ELECT	4.7MF	20%	16V
C414	1-126-157-11	ELECT	10MF	20%	16V
C428	1-124-589-11	ELECT	47MF	20%	10V
C430	1-135-149-21	TANTAL. CHIP	2.2MF	20%	6.3V
C450	1-124-257-00	ELECT	2.2MF	20%	50V
C501	1-163-038-00	CERAMIC CHIP	0.1MF		25V
C502	1-164-232-11	CERAMIC CHIP	0.01MF	10%	50V
C503	1-124-431-00	ELECT	33MF	20%	4V
C505	1-163-078-11	CERAMIC CHIP	0.033MF	10%	25V
C506	1-164-232-11	CERAMIC CHIP	0.01MF	10%	50V
C507	1-135-070-00	TANTAL. CHIP	0.1MF	20%	35V
C508	1-163-038-00	CERAMIC CHIP	0.1MF		25V
C509	1-124-431-00	ELECT	33MF	20%	4V
C510	1-163-038-00	CERAMIC CHIP	0.1MF		25V
C511	1-164-232-11	CERAMIC CHIP	0.01MF	10%	50V
C512	1-124-584-00	ELECT	100MF	20%	10V
C513	1-124-431-00	ELECT	33MF	20%	4V
C514	1-163-095-00	CERAMIC CHIP	12PF	5%	50V
C515	1-163-117-00	CERAMIC CHIP	100PF	5%	50V
C516	1-163-038-00	CERAMIC CHIP	0.1MF		25V
C517	1-163-038-00	CERAMIC CHIP	0.1MF		25V
C518	1-164-232-11	CERAMIC CHIP	0.01MF	10%	50V
C519	1-163-038-00	CERAMIC CHIP	0.1MF		25V
C520	1-163-037-11	CERAMIC CHIP	0.022MF	10%	25V
C521	1-163-117-00	CERAMIC CHIP	100PF	5%	50V
C522	1-124-239-00	ELECT	6.8MF	20%	25V
C523	1-124-239-00	ELECT	6.8MF	20%	25V
C524	1-126-153-11	ELECT	22MF	20%	6.3V
C525	1-163-038-00	CERAMIC CHIP	0.1MF		25V
C526	1-163-117-00	CERAMIC CHIP	100PF	5%	50V
C527	1-163-081-00	CERAMIC CHIP	0.22MF		25V
C528	1-126-153-11	ELECT	22MF	20%	6.3V
C529	1-163-125-00	CERAMIC CHIP	220PF	5%	50V
C531	1-163-038-00	CERAMIC CHIP	0.1MF		25V
C532	1-163-038-00	CERAMIC CHIP	0.1MF		25V
C533	1-162-638-11	CERAMIC CHIP	1MF		16V
C534	1-163-038-00	CERAMIC CHIP	0.1MF		25V

Ref.No.	Part No.	Description			
C535	1-163-009-11	CERAMIC CHIP	0.001MF	10%	50V
C536	1-163-078-11	CERAMIC CHIP	0.033MF	10%	25V
C537	1-135-145-11	TANTAL. CHIP	0.47MF	20%	25V
C538	1-124-434-00	ELECT	220MF	20%	4V
C539	1-163-009-11	CERAMIC CHIP	0.001MF	10%	50V
C540	1-162-637-11	CERAMIC CHIP	0.47MF		16V
C543	1-135-148-21	TANTAL. CHIP	1.5MF	10%	16V
C544	1-131-365-00	(UK)....TANTAL	10MF	10%	16V
C544	1-135-159-21	(US,Canadian,AEP,E,Australian) ...TANTAL. CHIP	10MF	20%	16V
C546	1-163-986-00	CERAMIC CHIP	0.027MF	10%	25V
C547	1-162-638-11	CERAMIC CHIP	1MF		16V
C548	1-126-162-11	ELECT	3.3MF	20%	50V
C549	1-126-157-11	ELECT	10MF	20%	16V
C550	1-163-141-00	CERAMIC CHIP	0.001MF	5%	50V
C551	1-126-157-11	ELECT	10MF	20%	16V
C552	1-126-160-11	ELECT	1MF	20%	50V
C553	1-162-638-11	CERAMIC CHIP	1MF		16V
C554	1-162-637-11	CERAMIC CHIP	0.47MF		16V
C555	1-163-081-00	CERAMIC CHIP	0.22MF		25V
C556	1-163-010-11	CERAMIC CHIP	0.0012MF	10%	50V
C557	1-163-017-00	CERAMIC CHIP	0.0047MF	10%	50V
C558	1-163-038-00	CERAMIC CHIP	0.1MF		25V
C559	1-124-584-00	ELECT	100MF	20%	10V
C561	1-163-038-00	CERAMIC CHIP	0.1MF		25V
C562	1-162-638-11	CERAMIC CHIP	1MF		16V
C601	1-163-038-00	CERAMIC CHIP	0.1MF		25V
C602	1-163-095-00	CERAMIC CHIP	12PF	5%	50V
C603	1-163-095-00	CERAMIC CHIP	12PF	5%	50V
C604	1-163-038-00	CERAMIC CHIP	0.1MF		25V
C605	1-162-638-11	CERAMIC CHIP	1MF		16V
C606	1-163-117-00	CERAMIC CHIP	100PF	5%	50V
C607	1-163-037-11	CERAMIC CHIP	0.022MF	10%	25V
C803	1-135-149-21	TANTAL. CHIP	2.2MF	20%	6.3V
C804	1-124-257-00	ELECT	2.2MF	20%	50V
C807	1-164-232-11	CERAMIC CHIP	0.01MF	10%	50V
C808	1-162-638-11	CERAMIC CHIP	1MF		16V
C809	1-135-092-21	TANTAL. CHIP	3.3MF	20%	16V
C810	1-162-638-11	CERAMIC CHIP	1MF		16V
C811	1-163-038-00	CERAMIC CHIP	0.1MF		25V
C812	1-164-346-11	CERAMIC CHIP	1MF		16V
CN501	1-566-976-11	SOCKET, CONNECTOR 12P			
CN502	1-565-309-11	CONNECTOR, FLEXIBLE 4P			
CNJ401	1-562-961-21	JACK (DC IN 9V)			
D401	8-719-200-36	DIODE E10QS04			
D402	8-719-106-22	DIODE RD7.5M-B1			
D403	8-719-938-72	(UK)...DIODE SB01-05CP			
D406	8-719-938-72	(UK)...DIODE SB01-05CP			
D409	8-719-975-40	DIODE RB411D			
D501	8-719-938-72	DIODE SB01-05CP			
D502	8-719-938-72	DIODE SB01-05CP			
D503	8-719-938-72	DIODE SB01-05CP			
D504	8-719-106-52	DIODE RD10M-B1			
D505	8-719-400-18	DIODE MA152WK			
D507	8-719-400-18	DIODE MA152WK			
D508	8-719-108-12	DIODE RD9.1EW			
D601	8-719-400-18	DIODE MA152WK			

Ref.No.	Part No.	Description
D801	8-719-951-22	DIODE IMN10
D803	8-719-951-22	DIODE IMN10
D804	8-719-400-18	DIODE MA152WK
D805	8-719-400-18	DIODE MA152WK
D806	8-719-938-72	DIODE SB01-05CP
D807	8-719-400-18	DIODE MA152WK
IC301	8-759-805-34	IC CXD1161M-3
IC302	8-759-630-75	IC M51568FP
IC303	8-759-924-46	IC BA4560F
IC304	8-759-991-27	IC BA3570F
IC501	8-752-033-55	IC CXA1271Q
IC502	8-752-033-54	IC CXA1272Q-Z
IC503	8-759-970-89	IC BA10358F
IC504	8-759-030-17	IC MPC1715FU
IC505	8-759-031-84	IC SC7S04F
IC601	8-752-332-40	IC CXD1130Q
IC602	8-752-323-65	IC CXK5816M-15L
IC801	8-752-815-51	IC CXP5024-111Q
IC802	8-759-982-03	IC RC5532-DD
J301	1-565-287-71	JACK (LINE OUT)
J302	1-565-287-81	JACK (PHONES)
L402	1-412-032-11	INDUCTOR CHIP 100UH
L403	1-412-031-11	INDUCTOR CHIP 47UH
L501	1-412-029-11	INDUCTOR CHIP 10UH
L502	1-412-039-51	INDUCTOR CHIP 100UH
L503	1-412-032-11	INDUCTOR CHIP 100UH
L504	1-412-032-11	INDUCTOR CHIP 100UH
L505	1-412-039-51	INDUCTOR CHIP 100UH
L506	1-412-029-11	INDUCTOR CHIP 10UH
LCD1	1-809-028-11	DISPLAY PANEL LIQUID CRYSTAL
M901	X-2641-521-1	MOTOR ASSY. T.T(SPINDLE)
M902	X-2641-537-2	MOTOR ASSY(SLED)
PS401	1-532-679-21	(UK)...LINK, IC
Q102	8-729-921-72	TRANSISTOR 2SD1781K-R
Q103	8-729-921-72	TRANSISTOR 2SD1781K-R
Q202	8-729-921-72	TRANSISTOR 2SD1781K-R
Q203	8-729-921-72	TRANSISTOR 2SD1781K-R
Q409	8-729-216-22	TRANSISTOR 2SA1162
Q410	8-729-904-87	TRANSISTOR 2SB1197K-R
Q412	8-729-921-72	TRANSISTOR 2SD1781K-R
Q413	8-729-926-71	TRANSISTOR 2SB1308-R
Q414	8-729-903-10	TRANSISTOR FMW1
Q415	8-729-216-22	TRANSISTOR 2SA1162
Q423	8-729-901-04	TRANSISTOR DTA114EK
Q424	8-729-903-10	TRANSISTOR FMW1
Q425	8-729-900-53	TRANSISTOR DTC114EK
Q451	8-729-922-34	TRANSISTOR 2SD1758-F5-QR
Q453	8-729-140-75	TRANSISTOR 2SD999-CLCK
Q501	8-729-216-22	TRANSISTOR 2SA1162
Q502	8-729-921-72	TRANSISTOR 2SD1781K-R
Q503	8-729-902-99	TRANSISTOR DTC114TK
Q504	8-729-901-78	TRANSISTOR 2SC2412K-R
Q506	8-729-903-29	TRANSISTOR DTA144TK
Q507	8-729-903-30	TRANSISTOR DTC144TK
Q801	8-729-901-05	TRANSISTOR DTA124EK
Q802	8-729-921-72	TRANSISTOR 2SD1781K-R
Q803	8-729-901-04	TRANSISTOR DTA114EK

Ref.No.	Part No.	Description			
Q805	8-729-900-53	TRANSISTOR DTC114EK			
Q806	8-729-800-37	TRANSISTOR 2SD1048X7			
Q807	8-729-800-37	TRANSISTOR 2SD1048X7			
R101	1-216-329-11	METAL GLAZE	5.1K	1%	1/10W
R102	1-216-336-11	METAL GLAZE	47K	1%	1/10W
R103	1-216-333-11	METAL GLAZE	15K	1%	1/10W
R104	1-218-160-11	METAL GLAZE	43K	1%	1/10W
R105	1-216-328-11	METAL GLAZE	4.3K	1%	1/10W
R106	1-216-333-11	METAL GLAZE	15K	1%	1/10W
R107	1-216-063-00	METAL GLAZE	3.9K	5%	1/10W
R108	1-216-053-00	METAL GLAZE	1.5K	5%	1/10W
R109	1-216-071-00	METAL GLAZE	8.2K	5%	1/10W
R110	1-216-009-00	METAL GLAZE	22	5%	1/10W
R111	1-216-073-00	METAL GLAZE	10K	5%	1/10W
R112	1-216-033-00	METAL GLAZE	220	5%	1/10W
R114	1-216-053-00	METAL GLAZE	1.5K	5%	1/10W
R115	1-216-073-00	METAL GLAZE	10K	5%	1/10W
R116	1-216-097-00	METAL GLAZE	100K	5%	1/10W
R117	1-216-073-00	METAL GLAZE	10K	5%	1/10W
R122	1-216-073-00	METAL GLAZE	10K	5%	1/10W
R123	1-216-097-00	METAL GLAZE	100K	5%	1/10W
R124	1-216-057-00	METAL GLAZE	2.2K	5%	1/10W
R201	1-216-329-11	METAL GLAZE	5.1K	1%	1/10W
R202	1-216-336-11	METAL GLAZE	47K	1%	1/10W
R203	1-216-333-11	METAL GLAZE	15K	1%	1/10W
R204	1-218-160-11	METAL GLAZE	43K	1%	1/10W
R205	1-216-328-11	METAL GLAZE	4.3K	1%	1/10W
R206	1-216-333-11	METAL GLAZE	15K	1%	1/10W
R207	1-216-063-00	METAL GLAZE	3.9K	5%	1/10W
R208	1-216-053-00	METAL GLAZE	1.5K	5%	1/10W
R209	1-216-071-00	METAL GLAZE	8.2K	5%	1/10W
R210	1-216-009-00	METAL GLAZE	22	5%	1/10W
R211	1-216-073-00	METAL GLAZE	10K	5%	1/10W
R212	1-216-182-00	METAL GLAZE	220	5%	1/8W
R214	1-216-053-00	METAL GLAZE	1.5K	5%	1/10W
R215	1-216-073-00	METAL GLAZE	10K	5%	1/10W
R216	1-216-097-00	METAL GLAZE	100K	5%	1/10W
R217	1-216-073-00	METAL GLAZE	10K	5%	1/10W
R222	1-216-073-00	METAL GLAZE	10K	5%	1/10W
R223	1-216-097-00	METAL GLAZE	100K	5%	1/10W
R224	1-216-057-00	METAL GLAZE	2.2K	5%	1/10W
R302	1-216-298-00	METAL GLAZE	2.2	5%	1/10W
R303	1-216-121-00	METAL GLAZE	1M	5%	1/10W
R308	1-216-065-00	METAL GLAZE	4.7K	5%	1/10W
R309	1-216-051-00	METAL GLAZE	1.2K	5%	1/10W
R310	1-216-121-00	METAL GLAZE	1M	5%	1/10W
R419	1-216-045-00	METAL GLAZE	680	5%	1/10W
R420	1-216-041-00	METAL GLAZE	470	5%	1/10W
R421	1-216-092-00	METAL GLAZE	62K	5%	1/10W
R422	1-216-067-00	METAL GLAZE	5.6K	5%	1/10W
R423	1-216-045-00	METAL GLAZE	680	5%	1/10W
R424	1-216-081-00	METAL GLAZE	22K	5%	1/10W
R425	1-216-049-00	METAL GLAZE	1K	5%	1/10W
R426	1-216-033-00	METAL GLAZE	220	5%	1/10W
R427	1-216-659-11	METAL CHIP	2.2K	0.50%	1/10W
R428	1-216-663-11	METAL CHIP	3.3K	0.50%	1/10W
R429	1-216-697-11	METAL CHIP	82K	0.50%	1/10W

Ref.No.	Part No.	Description			
R430	1-216-663-11	METAL CHIP	3.3K	0.50%	1/10W
R431	1-216-073-00	METAL GLAZE	10K	5%	1/10W
R436	1-216-025-00	METAL GLAZE	100	5%	1/10W
R437	1-216-686-11	METAL CHIP	30K	0.50%	1/10W
R438	1-216-053-00	METAL GLAZE	1.5K	5%	1/10W
R439	1-216-694-11	METAL CHIP	62K	0.50%	1/10W
R440	1-216-049-00	METAL GLAZE	1K	5%	1/10W
R441	1-216-089-00	METAL GLAZE	47K	5%	1/10W
R446	1-216-009-00	METAL GLAZE	22	5%	1/10W
R448	1-216-041-00	METAL GLAZE	470	5%	1/10W
R481	1-216-174-00	METAL GLAZE	100	5%	1/8W
R501	1-216-024-00	METAL GLAZE	91	5%	1/10W
R502	1-216-069-00	METAL GLAZE	6.8K	5%	1/10W
R503	1-216-049-00	METAL GLAZE	1K	5%	1/10W
R504	1-216-073-00	METAL GLAZE	10K	5%	1/10W
R505	1-216-105-00	METAL GLAZE	220K	5%	1/10W
R506	1-216-081-00	METAL GLAZE	22K	5%	1/10W
R508	1-216-069-00	METAL GLAZE	6.8K	5%	1/10W
R509	1-216-077-00	METAL GLAZE	15K	5%	1/10W
R510	1-216-073-00	METAL GLAZE	10K	5%	1/10W
R511	1-216-150-00	METAL GLAZE	10	5%	1/8W
R512	1-216-085-00	METAL GLAZE	33K	5%	1/10W
R513	1-216-073-00	METAL GLAZE	10K	5%	1/10W
R514	1-216-073-00	METAL GLAZE	10K	5%	1/10W
R515	1-216-097-00	METAL GLAZE	100K	5%	1/10W
R516	1-216-129-00	METAL GLAZE	2.2M	5%	1/10W
R517	1-216-093-00	METAL GLAZE	68K	5%	1/10W
R518	1-216-097-00	METAL GLAZE	100K	5%	1/10W
R519	1-216-119-00	METAL GLAZE	820K	5%	1/10W
R520	1-216-748-11	METAL GLAZE	39K	5%	1/10W
R521	1-216-095-00	METAL GLAZE	82K	5%	1/10W
R522	1-216-081-00	METAL GLAZE	22K	5%	1/10W
R523	1-216-059-00	METAL GLAZE	2.7K	5%	1/10W
R524	1-216-089-00	METAL GLAZE	47K	5%	1/10W
R525	1-216-097-00	METAL GLAZE	100K	5%	1/10W
R526	1-216-114-00	METAL GLAZE	510K	5%	1/10W
R528	1-216-077-00	METAL GLAZE	15K	5%	1/10W
R529	1-216-686-11	METAL CHIP	30K	0.50%	1/10W
R530	1-216-686-11	METAL CHIP	30K	0.50%	1/10W
R531	1-216-059-00	METAL GLAZE	2.7K	5%	1/10W
R532	1-216-103-00	METAL GLAZE	180K	5%	1/10W
R533	1-216-062-00	METAL GLAZE	3.6K	5%	1/10W
R534	1-216-121-00	METAL GLAZE	1M	5%	1/10W
R536	1-216-099-00	METAL GLAZE	120K	5%	1/10W
R537	1-216-083-00	METAL GLAZE	27K	5%	1/10W
R538	1-216-094-00	METAL GLAZE	75K	5%	1/10W
R539	1-216-094-00	METAL GLAZE	75K	5%	1/10W
R540	1-216-086-00	METAL GLAZE	36K	5%	1/10W
R543	1-216-302-00	METAL GLAZE	2.7	5%	1/10W
R544	1-216-077-00	METAL GLAZE	15K	5%	1/10W
R545	1-216-113-00	METAL GLAZE	470K	5%	1/10W
R546	1-216-065-00	METAL GLAZE	4.7K	5%	1/10W
R547	1-216-057-00	METAL GLAZE	2.2K	5%	1/10W
R548	1-216-057-00	METAL GLAZE	2.2K	5%	1/10W
R549	1-216-065-00	METAL GLAZE	4.7K	5%	1/10W
R550	1-216-049-00	METAL GLAZE	1K	5%	1/10W
R551	1-216-049-00	METAL GLAZE	1K	5%	1/10W

Ref.No.	Part No.	Description			
R552	1-216-081-00	METAL GLAZE	22K	5%	1/10W
R553	1-216-049-00	METAL GLAZE	1K	5%	1/10W
R554	1-216-033-00	METAL GLAZE	220	5%	1/10W
R555	1-216-081-00	METAL GLAZE	22K	5%	1/10W
R556	1-216-073-00	METAL GLAZE	10K	5%	1/10W
R557	1-216-049-00	METAL GLAZE	1K	5%	1/10W
R558	1-216-073-00	METAL GLAZE	10K	5%	1/10W
R559	1-216-065-00	METAL GLAZE	4.7K	5%	1/10W
R560	1-216-129-00	METAL GLAZE	2.2M	5%	1/10W
R561	1-216-065-00	METAL GLAZE	4.7K	5%	1/10W
R562	1-216-097-00	METAL GLAZE	100K	5%	1/10W
R563	1-216-111-00	METAL GLAZE	390K	5%	1/10W
R564	1-216-025-00	METAL GLAZE	100	5%	1/10W
R601	1-216-097-00	METAL GLAZE	100K	5%	1/10W
R602	1-216-089-00	METAL GLAZE	47K	5%	1/10W
R801	1-216-089-00	METAL GLAZE	47K	5%	1/10W
R802	1-216-238-00	METAL GLAZE	47K	5%	1/8W
R803	1-216-109-00	METAL GLAZE	330K	5%	1/10W
R806	1-216-089-00	METAL GLAZE	47K	5%	1/10W
R807	1-216-073-00	METAL GLAZE	10K	5%	1/10W
R808	1-216-053-00	METAL GLAZE	1.5K	5%	1/10W
R809	1-216-059-00	METAL GLAZE	2.7K	5%	1/10W
R810	1-216-075-00	METAL GLAZE	12K	5%	1/10W
R811	1-216-077-00	METAL GLAZE	15K	5%	1/10W
R812	1-216-077-00	METAL GLAZE	15K	5%	1/10W
R813	1-216-077-00	METAL GLAZE	15K	5%	1/10W
R817	1-216-025-00	METAL GLAZE	100	5%	1/10W
R818	1-216-101-00	METAL GLAZE	150K	5%	1/10W
R819	1-216-105-00	METAL GLAZE	220K	5%	1/10W
R820	1-216-089-00	METAL GLAZE	47K	5%	1/10W
R821	1-216-025-00	METAL GLAZE	100	5%	1/10W
RV301	1-230-485-11	RES, VAR, CARBON 10K/10K (VOLUME)			
RV401	1-228-993-00	RES, ADJ, CARBON 4.7K (5.3V)			
RV501	1-228-996-00	RES, ADJ, CARBON 47K (FOCUS GAIN)			
RV502	1-228-996-00	RES, ADJ, CARBON 47K (TRACKING GAIN)			
RV503	1-228-995-00	RES, ADJ, CARBON 22K (TRACKING BALANCE)			
RV504	1-230-526-11	RES, ADJ, METAL GLAZE 47K (FOUCS BIAS)			
RV505	1-238-597-11	RES, ADJ, CARBON 1K (PLL)			

Ref.No.	Part No.	Description
S402	1-570-386-21	SWITCH, SLIDE (BASS BOOST)
S801	1-571-099-11	SWITCH (OPEN)
S802	1-570-386-21	SWITCH, SLIDE (RESUME/HOLD)
S803	1-570-993-11	SWITCH, TACT (ENTER)
S804	1-571-530-11	SWITCH, KEY BOARD (▷/II)
S805	1-571-530-11	SWITCH, KEY BOARD (■)
S806	1-571-530-11	SWITCH, KEY BOARD (⏮)
S807	1-571-530-11	SWITCH, KEY BOARD (⏭)
S808	1-570-993-11	SWITCH, TACT (PLAY MODE)
S901	1-570-112-11	SWITCH, LEAF(LIMIT)
X601	1-567-908-11	VIBRATOR, CRYSTAL (16.9344MHz)
X801	1-578-773-11	VIBRATOR, CERAMIC (3.58MHz)

ACCESSORY & PACKING MATERIAL

⚠1-463-968-11	(US).....ADAPTOR, AC (AC-940)
⚠1-463-694-11	(Canadian).....ADAPTOR, AC (AC-930A)
⚠1-463-700-11	(UK).....ADAPTOR, AC (AC-930A)
⚠1-463-701-11	(Australian)...ADAPTOR, AC (AC-930A)
⚠1-463-702-11	(E).....ADAPTOR, AC (AC-950W)
⚠1-463-705-11	(AEP).....ADAPTOR, AC (AC-930AEP)
⚠1-569-007-11	(E)...ADAPTOR, CONVERSION 2P
1-555-658-21	CORD, CONNECTION
1-575-145-11	CORD, CONNECTION
3-751-971-11	(AEP,UK,E,Australian)...MANUAL, INSTRUCTION (ENGLISH,FRENCH,SPANISH,PORTUGUESE)
3-751-971-21	(US,Canadian)...MANUAL, INSTRUCTION (ENGLISH)
3-751-971-31	(Canadian)...MANUAL, INSTRUCTION (FRENCH)
3-751-971-41	(AEP).....MANUAL, INSTRUCTION (GERMAN,ITALIAN,DUTCH,SWEDISH)
*4-920-407-01	BAG, PROTECTION
4-931-885-01	STRAP, HAND
*4-926-687-01	(US,Canadian,AEP,UK,E)...CUSHION (UPPER)
*4-938-805-01	(Australian).....CUSHION (UPPER)
*4-938-806-01	(US,Canadian,E).....CUSHION (LOWER)
*4-938-811-01	(AEP,UK,Australian)...CUSHION (LOWER)
*4-938-810-01	(AEP,UK,Australian)...INDIVIDUAL CARTON
*4-938-804-01	(US,Canadian,E).....INDIVIDUAL CARTON
8-952-350-XX	(Canadian,E,Australian) ...HEADPHONE MDR-E454A SET
8-953-307-90	(US,AEP,UK)...HEADPHONE MDR-A10D SET

Note:
The components identified by mark ⚠ or dotted line with mark ⚠ are critical for safety. Replace only with part number specified.

Note:
Les composants identifiés par une marque ⚠ sont critiques pour la sécurité. Ne les remplacer que par une pièce portant le numéro spécifié.

9-955-889-11
(Including 9-955-889-91)

Sony Corporation
General Audio Group

English
90F02100-1
Printed in Japan

Published by Customer Relations and Service Group

D-11

SONY

SERVICE MANUAL

US Model
Canadian Model
AEP Model
UK Model
E Model
Australian Model

SUPPLEMENT-1

File this supplement with the service manual.

Subject : 1. Saudi Arabia model has been added

1. Saudi Arabia model has been added for E mode.
   This supplement only contains the difference between the models.
   Therefore, refer to the service manual for the other information.

Page	E model Part No.	Saudi Arabia model Part No.	Description
29	1-463-702-11	1-465-800-11	ADAPTOR, AC (AC-950W)
	1-569-007-11	1-569-008-11	ADAPTOR, CONVERSION 2P
	*4-938-804-01	*4-938-810-01	INDIVIDUAL CARTON
	*4-938-806-01	*4-938-811-01	CUSHION (LOWER)

- Items marked "*" are not stocked since they are seldom required for routine service. Some delay should be anticipated when ordering these items.

REVISED

2. Correction
   Please correct your service manual.
   ☛ : Corrected portion

Page	Incorrect	Correct
24	5-2. GENERAL SECTION (2) 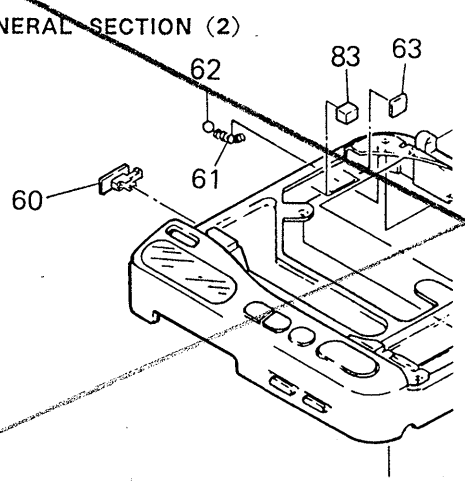	5-2. GENERAL SECTION (2) 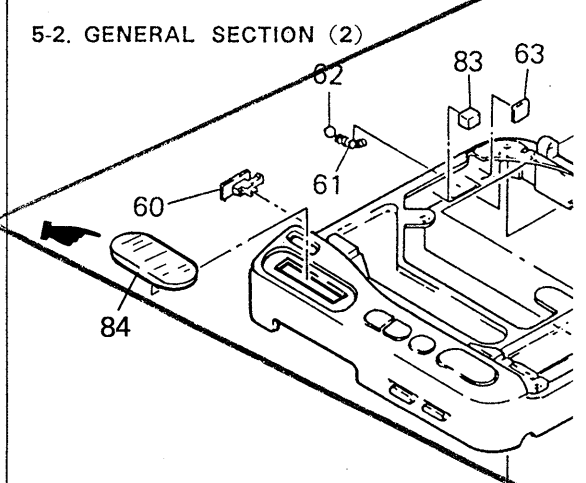 84 4-938-830-01 WINDOW (LCD)

9-955-889-81

Sony Corporation
General Audio Group

English
91E0216-1
Printed in Japan

Published by Customer Relations and Service Group