D-170AN/171/171V/172CK/173/175

SERVICE MANUAL

US Model
D-173

Canadian Model
Australian Model
D-171/172CK/173

AEP Model
D-170AN/171/171V/172CK/173/175

UK Model
D-170AN/171/172CK/173/175

E Model
D-171/172CK/173/175

Chinese Model
D-171/172CK/173/175

Tourist Model
D-170AN/175

Photo : D-175

SPECIFICATIONS

Model Name Using Similar Mechanism	NEW
CD Mechanism Type	CDM-2411AAA
Optical Pick-up Type	DAX-11A

System
Compact disc digital audio system
Laser diode properties
Material: GaAlAs
Wavelength: λ = 780 nm
Emission duration: Continuous
Laser output: Less than 44.6 μW (measured at 200 mm away from the objective lens surface)
Error correction
Sony Super Strategy Cross Interleave Reed Solomon Code
D-A conversion
1-bit quartz time-axis control
Frequency response
20 - 20,000 Hz ±½dB (measured by EIAJ CP-307)
Output (at 4.5 V input level)
Headphones (stereo minijack)
15 mW + 15 mW at 16 ohms
Line output (stereo minijack)
Output level 0.7 V rms at 50 kilohms
Recommended load impedance over 10 kilohms

General

Power requirements
- Sony BP-DM10 Rechargeable battery: 2.4 V DC, Ni-Cd, 650 mAh
  Sony BP-DM20 Rechargeable battery: 2.4 V DC, Ni-MH, 1,200 mAh
- Two LR6 (size AA) batteries: 3 V DC
- AC power adaptor (DC IN 4.5 V jack):
  US, Canadian,
  Central & South America model : 120V, 60Hz
  AEP, E13 (AC220 – 230V area),
  Chinese model : 220 – 230V, 50Hz
  UK model : 230 – 240V, 50Hz
  Saudi Arabia model : 110 – 240V, 50/60Hz
  Australian model : 240V, 50Hz
  Tourist, E33 (AC100 – 240V area) model : 100 – 240V, 50/60Hz
- Sony CPM-300P mount plate for use on car battery: 4.5 V DC

Dimensions (w/h/d) (without projecting parts and controls)
Approx. 135 × 29.9 × 159.5 mm
(5 3/8 × 1 1/16 × 6 3/8 in.)
Mass (without rechargeable battery)
Approx. 250 g (8.8 oz)
Operating temperature
5°C - 35°C (41°F - 95°F)

Supplied accessories

D-170AN
Stereo headphones (1)
D-171
AC power adaptor (1)
Stereo headphones (1)
Connecting cord (Phono plug × 2 ↔ stereo miniplug) (1)
D-171V
AC power adaptor (1)
Connecting cord (Phono plug × 2 ↔ stereo miniplug) (1)
Stereo headphones with volume control (1)
D-172CK
AC power adaptor (1)*
Stereo headphones (1)
Connecting cord (Phono plug × 2 ↔ stereo miniplug) (1)*
Car connecting pack (1)
Car mount plate (1)
Car battery cord (1)
Velcro tapes (2)
Spare fuse (1)
Spiral tube (1)
* Not supplied with AEP and UK model
D-173
AC power adaptor (1)
Stereo headphones (1)
Rechargeable battery (1)
Connecting cord (Phono plug × 2 ↔ stereo miniplug) (1)
D-175
AC power adaptor (1)*
Stereo headphones with remote commander (1)
Rechargeable battery (1)*
Connecting cord (Phono plug × 2 ↔ stereo miniplug) (1)*
Alkaline batteries (2)**
* Not supplied with Tourist model
** Supplied with Tourist model only

Design and specifications are subject to change without notice.

COMPACT DISC COMPACT PLAYER

MICROFILM

SONY®

TABLE OF CONTENTS

D-171 "La Fiesta" model

The "La Fiesta" model is same as the D-171 C&SA model except for upper lid assy.
See page 27 for part No. of upper lid assy.

SAFETY-RELATED COMPONENT WARNING!!

**COMPONENTS IDENTIFIED BY MARK ⚠ OR DOTTED LINE WITH MARK ⚠ ON THE SCHEMATIC DIAGRAMS AND IN THE PARTS LIST ARE CRITICAL TO SAFE OPERATION.
REPLACE THESE COMPONENTS WITH SONY PARTS WHOSE PART NUMBERS APPEAR AS SHOWN IN THIS MANUAL OR IN SUPPLEMENTS PUBLISHED BY SONY.**

DANGER

Invisible laser radiation when open and interlock failed or defeated. Avoid direct exposure to beam.

CAUTION

Use of controls or adjustments or performance of procedures other than those specified herein may result in hazardous radiation exposure.

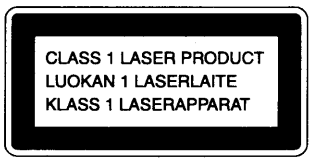

This Compact Disc player is classified as a CLASS 1 LASER product.
The CLASS 1 LASER PRODUCT label is located on the bottom exterior.

Flexible Circuit Board Repairing

- Keep the temperature of the soldering iron around 270°C during repairing.
- Do not touch the soldering iron on the same conductor of the circuit board (within 3 times).
- Be careful not to apply force on the conductor when soldering or unsoldering.

Notes on chip component replacement

- Never reuse a disconnected chip component.
- Notice that the minus side of a tantalum capacitor may be damaged by heat.

ATTENTION AU COMPOSANT AYANT RAPPORT À LA SÉCURITÉ!

LES COMPOSANTS IDENTIFIÉS PAR UNE MARQUE ⚠ SUR LES DIAGRAMMES SCHÉMATIQUES ET LA LISTE DES PIÈCES SONT CRITIQUES POUR LA SÉCURITÉ DE FONCTIONNEMENT. NE REMPLACER CES COMPOSANTS QUE PAR DES PIÈCES SONY DONT LES NUMÉROS SONT DONNÉS DANS CE MANUEL OU DANS LES SUPPLÉMENTS PUBLIÉS PAR SONY.

SECTION 1
SERVICING NOTES

NOTES ON HANDLING THE OPTICAL PICK-UP BLOCK OR BASE UNIT

The laser diode in the optical pick-up block may suffer electrostatic breakdown because of the potential difference generated by the charged electrostatic load, etc. on clothing and the human body. During repair, pay attention to electrostatic breakdown and also use the procedure in the printed matter which is included in the repair parts.
The flexible board is easily damaged and should be handled with care.

NOTES ON LASER DIODE EMISSION CHECK

The laser beam on this model is concentrated so as to be focused on the disc reflective surface by the objective lens in the optical pick-up block. Therefore, when checking the laser diode emission, observe from more than 30cm away from the objective lens.

Before Replacing the Optical pick-up Block

Please be sure to check thoroughly the parameters as par the "Optical pick-up Block Checking Procedure" (Part No. : 9-960-027-11) issued separately before replacing the optical Pick-up block.
Note and specifications required to check are given below.

- FOK output : IC501 ⑫ pin
  When checking FOK, remove the lead wire to disc motor.
- S curve P-to-P value : 1.2 ± 0.3Vp-p IC501 ㉛ pin.
  When checking S curve P-to-P value, remove the lead wire to disc motor.
- Adjusted part for focus gain adjustment : RV503
- RF signal P-to-P value : 0.8 – 1.2Vp-p
- Traverse signal P-to-P value : 1.0 – 2.4Vp-p
- The repairing grating holder is impossible.
- Adjusted part for tracking gain adjustment : RV502

Precautions for Checking Emission of Laser Diode

Laser light of the equipment is focused by the object lens in the optical pick-up so that the light focuses on the reflection surface of the disc. Therefore, be sure to keep your eyes more then 30cm apart from the object lens when you check the emission of laser diode.

Laser Diode Checking Methods

During normal operation of the equipment, emission of the laser diode is prohibited unless the upper panel is closed while turning ON the S801 (push switch type).
The following two checking methods for the laser diode are operable.

Method-1 (In the service mode or normal operation) : Emission of the laser diode Is visually checked.

1. Open the upper lid.
2. Push the S801 as shown in Fig. 1 .
3. Check the object lens for confirming normal emission of the laser diode. If not emitting, there is a trouble in the automatic power control circuit or the optical pick-up. During normal operation, the laser diode is turned ON about 2.5 seconds for focus searching.

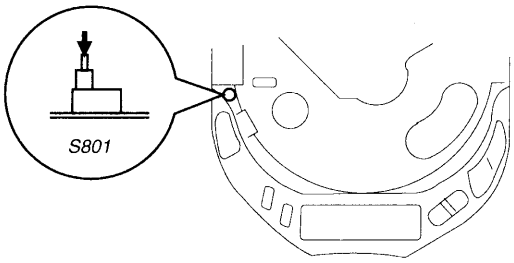

Fig.1 Method to push S801

Method-2 (In the service mode or normal operation) : Check the value of current flowing in the laser diode.

1. Remove the upper panel.
2. Read the current printed on the rear side of the optical pick-up.
   (Print on the rear side of the optical pick-up)

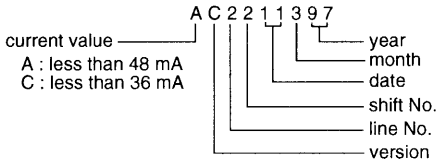

3. Connect a level meter as shown in Fig. 2
4. Press the ▶II key.
5. Calculate the current value by the reading of the VOM .
   Reading of the tester (V) ÷ 4.7 (Ω) = current value (A)
   (Example) Reading of the VOM of 0.2256 V :
   0.2256 V ÷ 4.7 Ω = 0.048 (A) = 48 mA
6. Check that the current value is within the following range.
   - Current value of the label $^{+5}_{-11}$ mA(25°C)
     Variation by temperature : 0.4mA / °C
     Current increases with temperature increased.
     Current decreases with temperature decreased.

   If the current is more than the range above, there is a truble in the automatic power control circuit or the laser diode is in deterioration.
   If less than the range, a trouble exists in the automatic power control circuit or the optical pick-up.

[MAIN BOARD] (Conductor side)

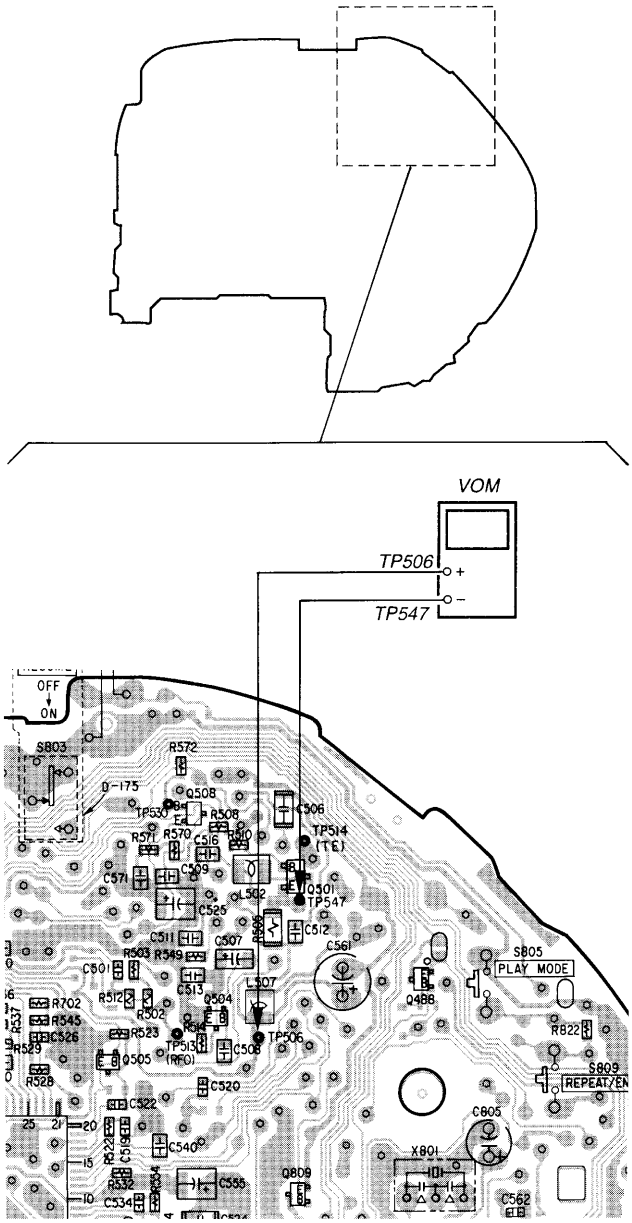

Fig.2 VOM Connecting Location

SECTION 2
GENERAL

LOCATION AND FUNCTION OF CONTROLS

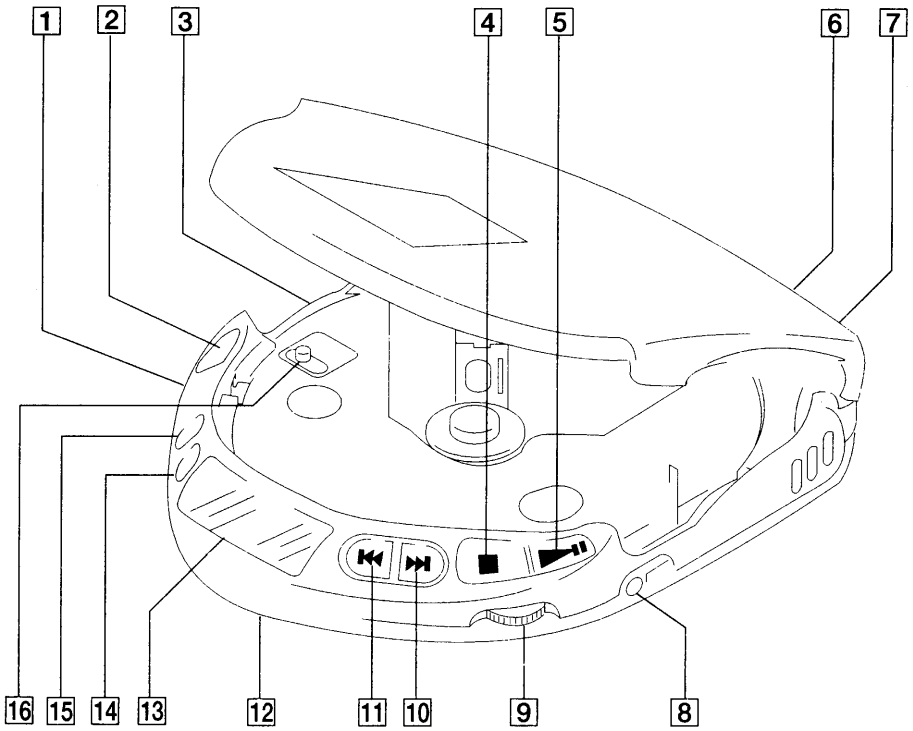

1 HOLD switch
2 OPEN button
3 DIGITAL MEGA BASS button
4 ■ STOP button
5 ►II Play/pause button
6 DC IN 4.5V jack
7 LINE OUT jack
8 ∩/REMOTE jack (D-175)
∩ jack (Except D-175)
9 VOLUME control
10 ►►I FF button
11 I◄◄ FR button
12 AVLS switch
13 Information display panel
14 REPEAT/ENTER button
15 PLAY MODE button
16 RESUME switch (D-175)

SECTION 3
DISASSEMBLY

● The equipment can be removed using the following procedure.

Set → Lid assy, Upper
→ Cabinet (Front) assy → MD assy → Main board

Note : Follow the disassembly procedure in the numerical order given.

3-1. LID ASSY, UPPER REMOVAL

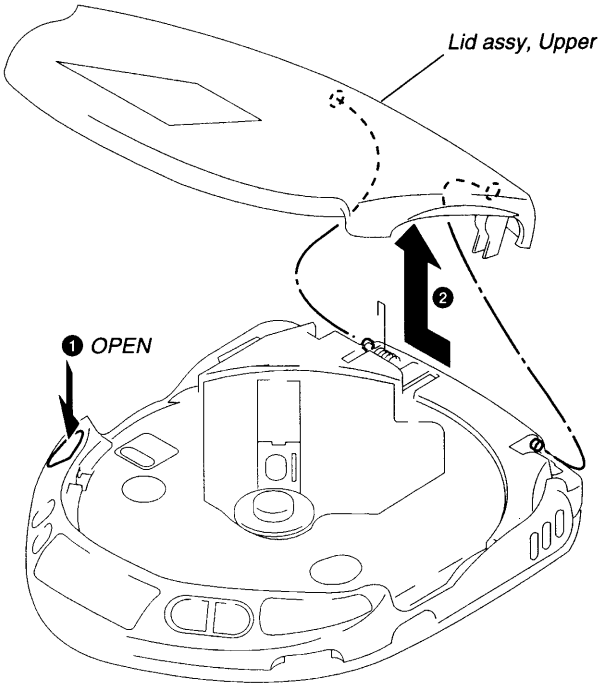

3-2. CABINET (FRONT) ASSY, MD ASSY REMOVAL

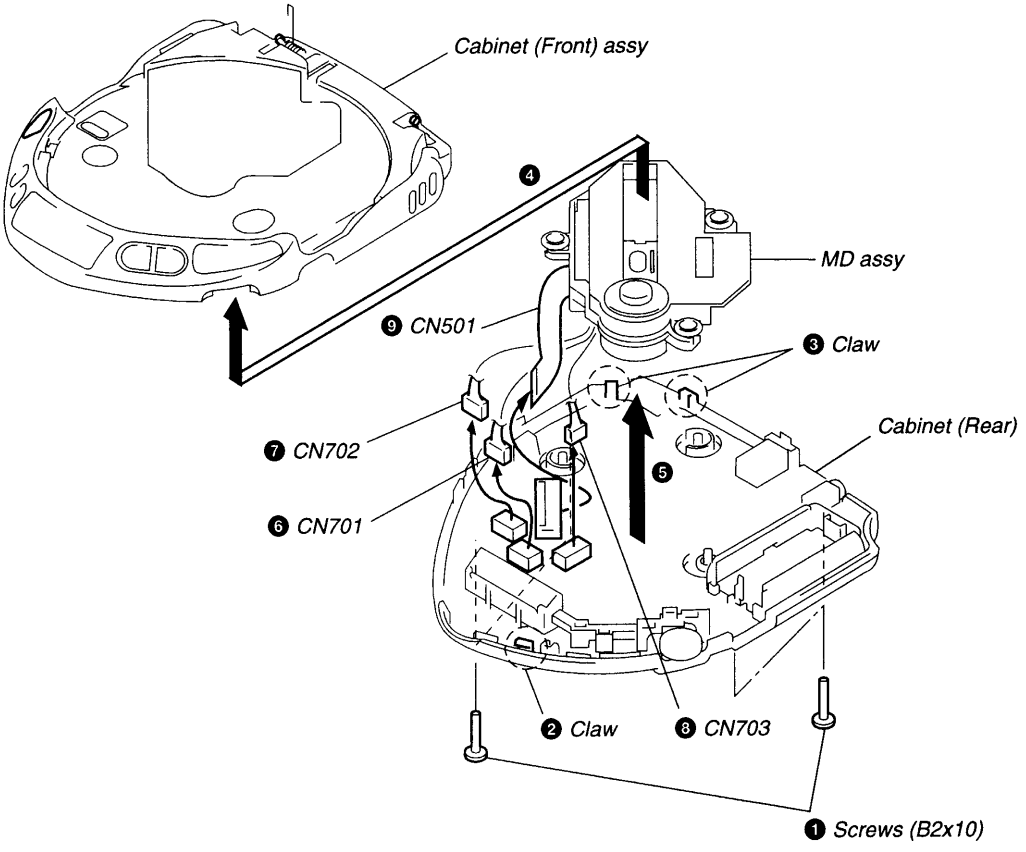

3-3. MAIN BOARD REMOVAL

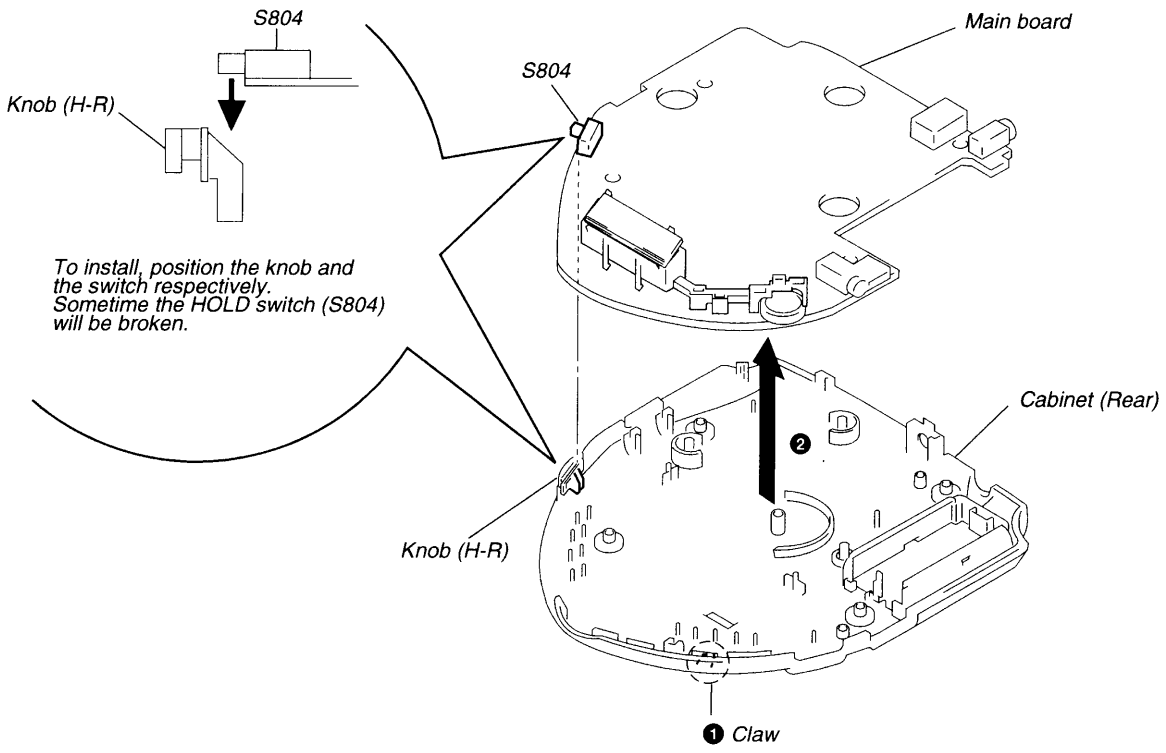

SECTION 4
SERVICE MODE

Service Mode (service program)

The equipment is provided with a service program built in the microcomputer, like conventional models.
Service program operation methods are described in the following.

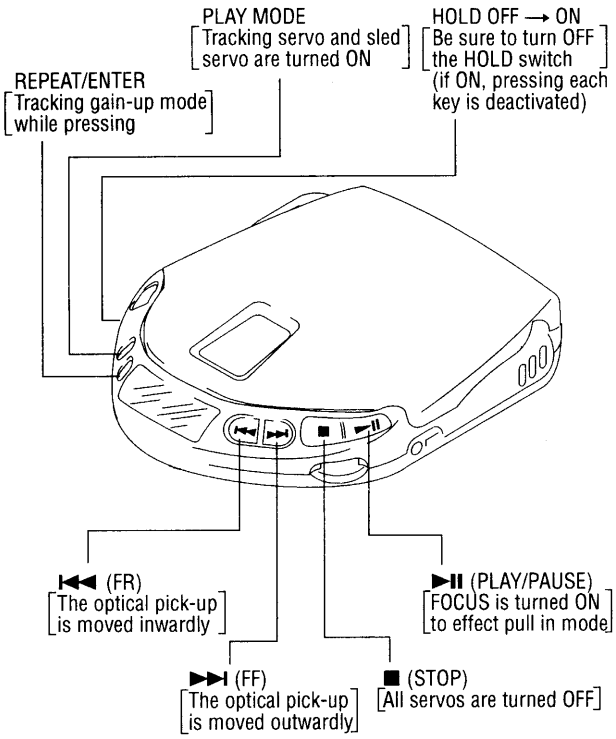

Fig. 3 Layout of each key

• Step 1 (Service mode setting method)

1. Turn OFF the HOLD switch the external power supply disconnected (power is not applied to the set).
2. Solder across the TAP802 (TEST) terminals (pin ㊷, IC801 (TEST) is grounded).
3. Connect an external power supply.
   Thus, the set is switched to the service mode.

• Step 2 (Operation in the service mode)

1. Once the service mode is effected, the LCD displays 5 indications each of which is repeatedly displayed.
   However, the following operations can be activated even if LCD indication is effected.
2. By pressing the ⏭ or ⏮ key, the optical pick-up movable inwardly or outwardly. However, if this is activated, tracking servo and sled servo are turned OFF, so it can be turned ON by pressing the PLAY MODE key, if required.
3. By pressing the REPEAT/ENTER key, the tracking gain-up mode becomes active.
4. By pressing the ⏯ key, focus is turned ON from focus searching while entering CLV-S (pull-in mode).
   Without disc, focus searching is repeated continuously.
5. By pressing the PLAY MODE key, tracking servo, sled servo and CLV-A (servo in PLAY) are turned ON.
6. When 4. and 5. are performed, playing begins. No muting is ON in the service mode.
7. By pressing the ■ key, all servos (focus tracking and sled) are turned OFF. However, the disc motor revolves for a while by inertia.

• Step 3 (Resetting service mode)

1. Be sure to disconnect the external power supply and remove the solder bridge at the TEST terminals connected in setting.
2. The set thus becomes available for normal operation.

– MAIN BOARD – (component side)

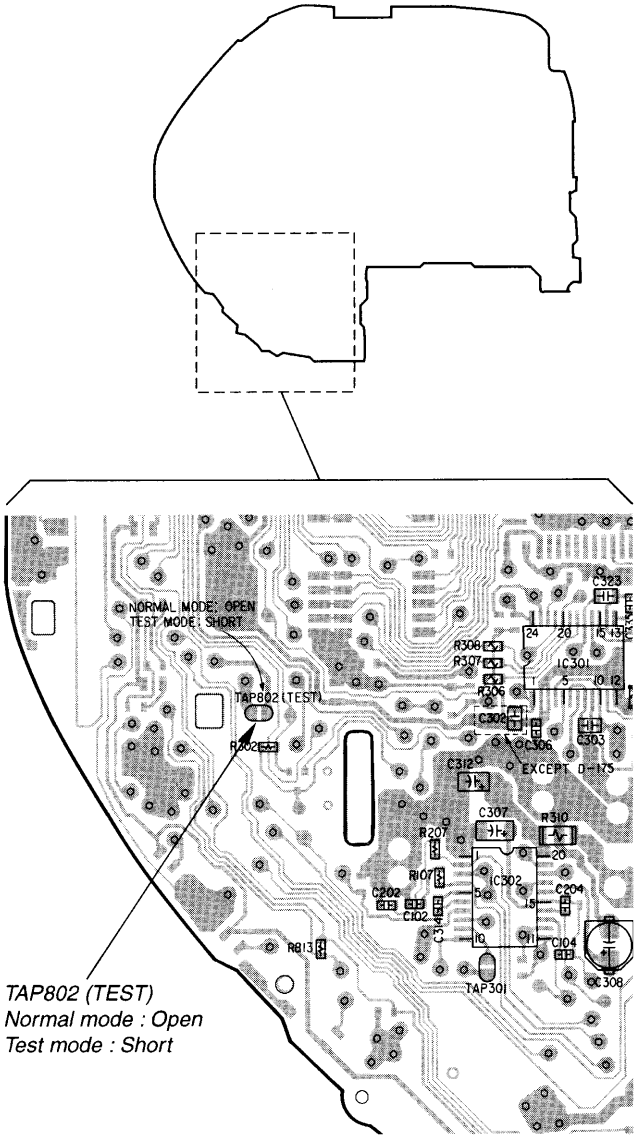

Fig. 4 Location of test terminal

SECTION 5
ADJUSTMENTS

CD SECTION

Precautions for Adjustment

1. Before beginning adjustment, set the equipment to service mode. After the completion of adjustment, be sure to reset the service mode.
   For more information, see "Service Mode (service program)" on page 7.
2. Perform adjustments in the order given.
3. Use the disc (YEDS-18. Part No. 3-702-101-01) unless otherwise indicated.
4. Power supply voltage requirement : DC 4.5 V

HOLD switch	: OFF
VOLUME	: Minimum
BASS BOOST switch	: NORM
AVLS switch	: OFF

Before Beginning Adjustment

Set the equipment to service mode (See page 7) and check the following.
If there in an error, repair the equipment.

• Checking of the sled motor

1. Open the upper panel.
2. Press the ▶▶I and I◀◀ keys and check that the optical pick-up can move smoothly without sluggishness or abnormal noise in innermost periphery → outermost periphery → innermost periphery
   ▶▶I : The optical pick-up moves outwardly
   I◀◀ : The optical pick-up moves inwardly

• Checking of focus searching

1. Open the upper panel.
2. Press the ▶II key. (Focus searching operation is activated continuously).
3. Check the object lens of the optical pick-up for smooth up/down motion without sluggishness or abnormal noise.
4. Press the ■ key.
   Check that focus searching operation is deactivated. If not, again press the ■ key slightly longer.

Tracking Balance Adjustment

Condition :

• Hold the set in horizontal state.

Procedure :

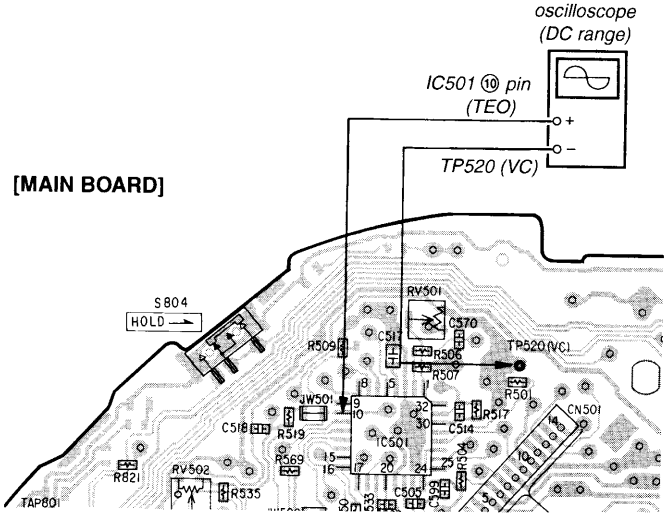

Fig. 5

[MAIN BOARD] (Conductor side)

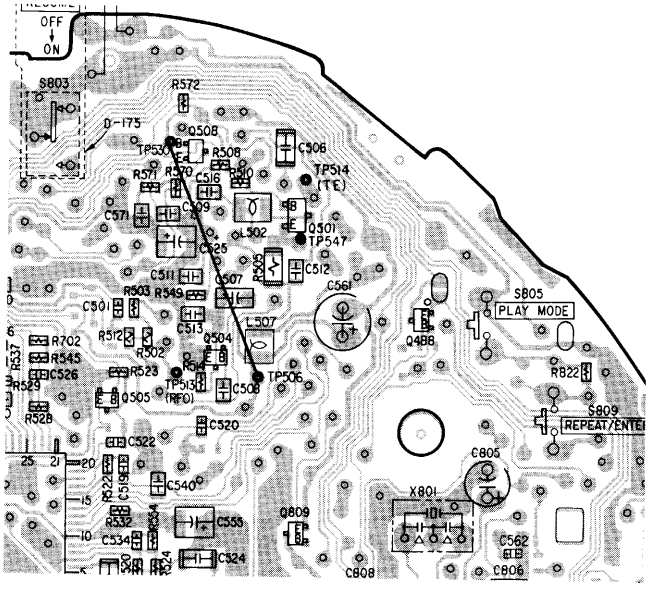

Fig. 6

1. Connect the oscilloscope between IC501 ⑩ pin (TEO) and TP520 (VC) on the MAIN board as shown in Fig. 5.
2. Connect the lead wire between TP530 (Q508, Base) and TP506 (Vcc : IC501 ㉑ pin) as shown in Fig. 6.
3. Set the equipment to service mode stop state (See page 7).
4. Move the optical pick-up by Pressing the ▶▶I and I◀◀ keys.
5. Put the disc (YEDS-18).
6. Press the ▶II key.
   (From focus searching, focus is turned ON while entering CLV drawing-in mode. Tracking and sled are turned OFF.)
7. Adjust RV501 so that the waveform on the oscilloscope becomes up/down symmetrical with an axis of 0V.

Note : Take Long sweep time for easy monitoring

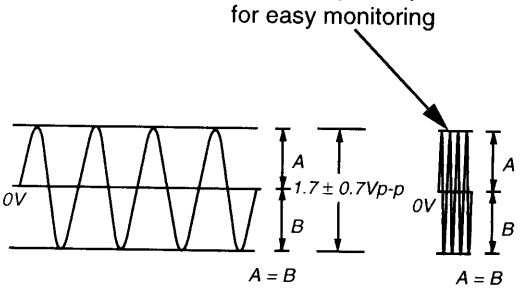

8. Stop removing of the motor by pressing the ■ key.
9. After the completion of adjustment, reset service mode. (See page 7)

Adjustment Location : Main board (page 10)

Focus Bias Check

Condition :

- Hold the set in horizontal state.

Procedure :

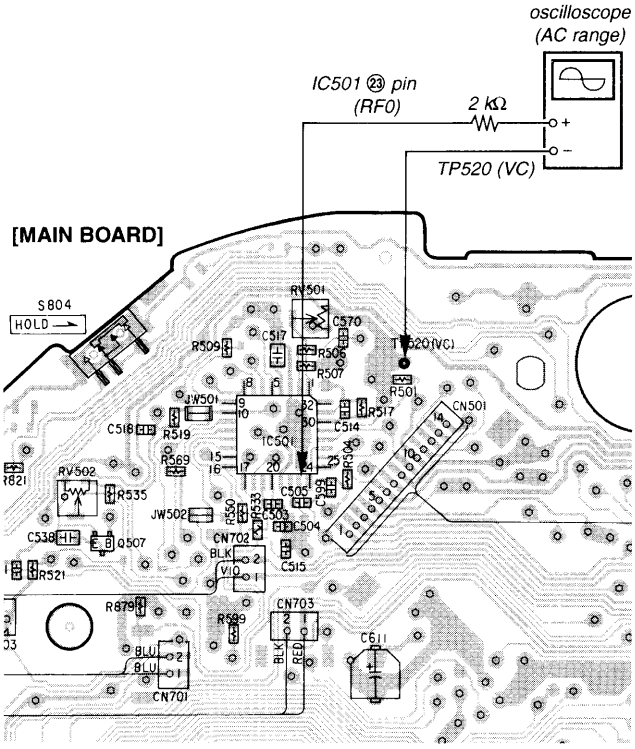

1. Set the equipment to service mode stop state (See page 7).
2. Connect the oscilloscope between IC501 ㉓ pin (RF0) and TP520 (VC) on the MAIN board.
3. Move the optical pick-up by Pressing the ▶▶I and I◀◀ keys.
4. Put the disc (YEDS-18).
5. Press the ▶II key.

   (From focus searching, focus is turned ON while entering CLV drawing-in mode. Tracking and sled are turned OFF.)
6. Press the PLAY MODE key. (Both tracking and sled are turned ON).
7. Check the oscilloscope waveform is as shown below.
   A good eye pattern means that the diamond shape (◊) in the center of the waveform can be clearly distinguished.

VOLT DIV : 200mV (with the 10 : 1 probe in use)
TIME DIV : 500nS

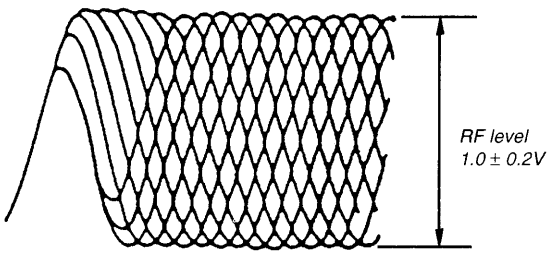

- **RF Signal Reference Waveform (eye pattern)**

  To watch the eye pattern, set the oscilloscope to AC range and increase the vertical sensitivity of the oscilloscope for easy watching.

8. Stop removing of the motor by pressing the ■ key.
9. After the completion of adjustment, reset service mode. (See page 7)

Focus/Tracking Gain Adjustment

A servo analyzer is necessary in order to perform this adjustment exactly.

However, this gain has a margin, so even if it is slightly off, there is no problem. Therefore, do not perform this adjustment.

Focus/tracking gain determines the pick-up follow-up relative to mechanical noise and mechanical shock when the 2-axis device operate. However, as these reciprocate, the adjustment is at the point where both are satisfied.

- When gain is rased, the noise when 2-axis device operates increases.
- When gain is lowered, it is more susceptible to mechanical shock and skipping occurs more easily.

This adjustment has to be performed upon replacing any of the following parts :

- Optical pick-up
- RV503 (Focus gain)
- RV502 (Tracking gain)

Normally, be sure not to move RV503 (focus gain) and RV502 (tracking gain).

– Focus Gain Adjustment –

Procedure :

This adjustment is not performed. If focus gain RV503 is turned, set to mechanical center

– Tracking Gain Adjustment –

(perform at normal operation)

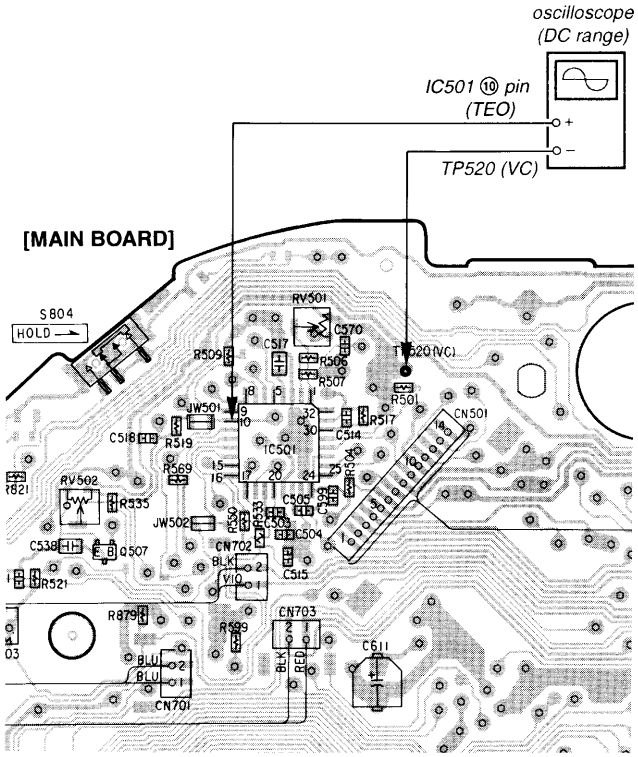

1. Place the optical pick-up level, horizontally. (If the optical pick-up is not level, the 2-axis device will be weighted and adjustment cannot be done.)
2. Connect the oscilloscope between IC501 ⑩ pin (TEO) and TP520 (VC) on the MAIN board.
3. Set the disc (YEDS-18) and Press the▶II (▶▶I) key.
4. Turn RV502 slightly clockwise (tracking gain drops) and obtain a waveform with a fundamental wave (waveform has large waves) as in Figure 1 .
5. Turn RV502 slowly counterclockwise (tracking gain rises) until the fundamental wave disappears (no large waves) as in Figure 2.
6. Set RV502 to the position about 30 °counterclockwise form the position obtained in step 5. If RV502 contact point is more than 90 ° counterclockwise from mechanical center, tracking gain is too high. In this case, readjust from step 4.
7. Press ▶II (▶▶I)or I◀◀ keys and observe the 100 track jump waveform. Check that no traverse waveform appears for both ▶II (▶▶I)or I◀◀ directions. (See Figures 3 and 4.) It is acceptable if the traverse waveform appears only now and then, but if it appears constantly raise tracking gain slightly and check step 7 again.
8. Check that there is not abnormal amount of operation noise (white noise) from the 2-axis device. If there is, tracking gain is too high, readjust starting with step 4.

The waveforms are those measured with the oscilloscope set as shown below.

- VOLT/DIV : 50mV
- TIME/DIV : 5mS

● Waveform when tracking gain lowered.
Fundamental wane appears (large waves).

Fig. 1

● Waveform when fundamental wane disappears (no large waves).

Fig. 2

● Waveform when no traverse waveform during 100 track jump. (Brake application is smooth because of adjustment.)

Fig. 3

● Waveform when no traverse waveform during 100 track jump. (Brake application is poor because of adjustment.)

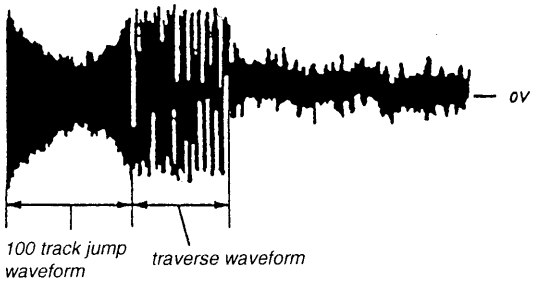

Fig. 4

Adjustment Location :

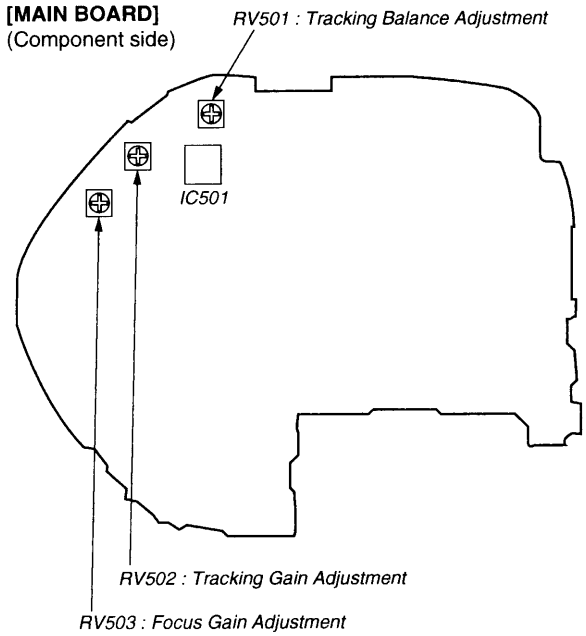

SECTION 6
EXPLANATION OF IC TERMINALS

IC801 MC68HC05L15SC442705CPB (SYSTEM CONTROL)

Pin No.	Pin name	I/O	Description
1 – 3	SEG 12–14	O	LCD segment signal output terminal.
4	FP26	–	Not used (Open).
5	XRST–DSP	O	Reset output terminal.
6	AMUTE –HP	O	Audio mute output terminal.
7	XSOE –ESP/XBRAKE	–	Not used (Open).
8	ESPON–PWE	O	ESP POWER ON control output.
9	DACLT–DAC	I/O	CPU serial data input, latch signal output (For DAC only).
10	C2POEN	O	C2PO signal control output. " L " : stop "H " : searching
11	MIRR–RF/CHGON–PWR	I	Charge ON signal input terminal.
12	RMDAT–WRMT	O	Serial data output to LCD remote controller. (D-175)
13	VLCD (GND)	–	Connect to ground.
14	VSS (GND)	–	Connect to ground.
15	NDLY (GND)	–	Connect to ground.
16	LIGHT–LED	–	Not used (Open).
17	PCON–PWR	O	Power ON/OFF control output. " L " : ON " H " : OFF
18	XMCRST–PWR	I	System reset input terminal.
19	OSC 1	I	System clock oscillator input terminal (4.1943 MHz).
20	OSC 2	O	System clock oscillator output terminal (4.1943 MHz).
21	SDT–ESP	–	Not used (Open).
22	SDT–ESP	–	Not used (Open).
23	SCK–ESP	–	Not used (Open).
24	MUTE-DRV	O	Motor drive mute output terminal.
25	XLT–ESP	–	Not used (Open).
26	HOLD–SW	I	Hold switch input termianl. " L " : HOLD ON " H " : HOLD OFF
27	XLMT–MD	I	Limit switch input terminal. " L " : Inside Track
28	XRSM–SW	I	RESUME switch input terminal. " L " : ON " H " : OFF (D-175)
29	WP XDC–DT PWR	I	DC in voltage detection terminal.
30	WP XOPEN–SW	I	Door open switch input terminal. " L " : Close " H " : Open
31	WP XPLAY–SW	I	Play/pause key input terminal.
32	WP RMKEY WRMT	I	Remote control key input terminal. (D-175)
33	XL/O DCT	I	LINE OUT jack detection terminal. " L " : Present " H " : No
34	XRCHG–SW	I	Rechargeable battery detection terminal. " L " : Present " H " : No
35	XAVLS–SW	I	AVLS switch input terminal.
36	R/W DSP	O	Read/Write switching signal output terminal. " L " : Read " H " : Write
37	SDT–DSP	I	SUB–Q signal input terminal.
38	SDT–DSP	O	Serial data output to DSP (IC502).
39	SCK–DSP	O	Clock signal to enter SUB–Q signal form DSP (IC502).
40	FOK–RF	I	FOK signal input terminal.

Pin No.	Pin name	I/O	Description
41	BUSY–DSP	I	BUSY signal input terminal from DSP (IC502).
42	BEEP–HP	O	Beep sound output terminal.
43	INT SCOR–DSP	I	Sub code sync SO+SI input terminal.
44	INT RMC–WLRMT	–	Not used (Open).
45	V_{DD} (VCPU)	–	Power supply terminal.
46 – 49	COM 0–3	O	LCD common signal output terminal.
50	VREFH	I	Reference voltage input terminal (connect to V_{DD}).
51	VREFL	–	Connect to ground.
52	AD ESPSL/TEST	I	Test mode terminal. " L " : Test mode " H " : Nomal mode
53	AD–KEY	I	A/D input termainal for main unit key.
54	AD–WRMT	I	A/D input termainal for remote control key (D-175).
55	AD–HI DC	I	A/D input termainal for DC IN voltage detection.
56	AD – BAT	I	Rechavgeable battery/dry cell detection input.
57	AD – CHG	I	A/D input terminal for charging voltage monitor.
58	AD – VCC	I	A/D input terminal for VCC voltage monitor.
59	AD – DSP OFFSET	I	A/D input terminal for DSP off-set monitor.
60	FP10	–	Not used (Open).
61 – 72	SEG 0 – 11	O	LCD segment signal output terminal.

SECTION 7
DIAGRAMS

7-1. BLOCK DIAGRAM

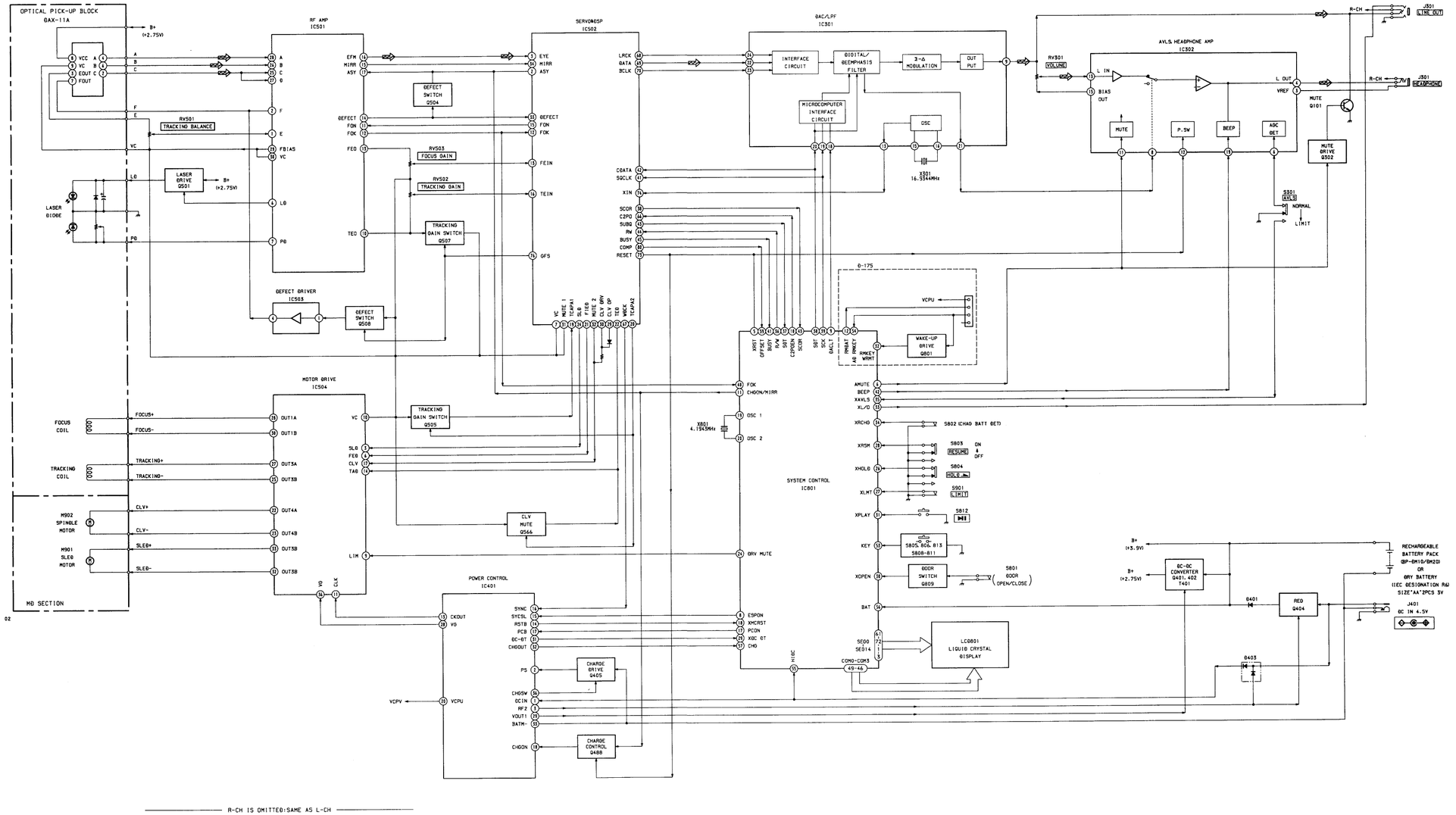

• Signal path.
: CD

7-2. PRINTED WIRING BOARDS

- **SEMICONDUCTOR LOCATION**

Ref. No.	Location
D101	G-17
D105	F-12
D201	H-17
D205	F-12
D302	H-17
D401	F-14
D403	E-13
D404	E-14
D407	C-14
D409	D-15
D414	F-14
D502	C-16
D801	H-18
D803	H-5
D804	F-12
IC301	F-4
IC302	G-4
IC401	D-14
IC501	B-4
IC502	D-16
IC503	B-15
IC504	B-13
IC801	E-19
Q101	F-9
Q201	F-9
Q302	F-6
Q401	E-13
Q402	E-13
Q404	E-14
Q405	D-9
Q488	C-19
Q501	B-18
Q504	C-17
Q505	C-17
Q507	C-3
Q508	B-17
Q566	B-15
Q801	H-17
Q809	D-18

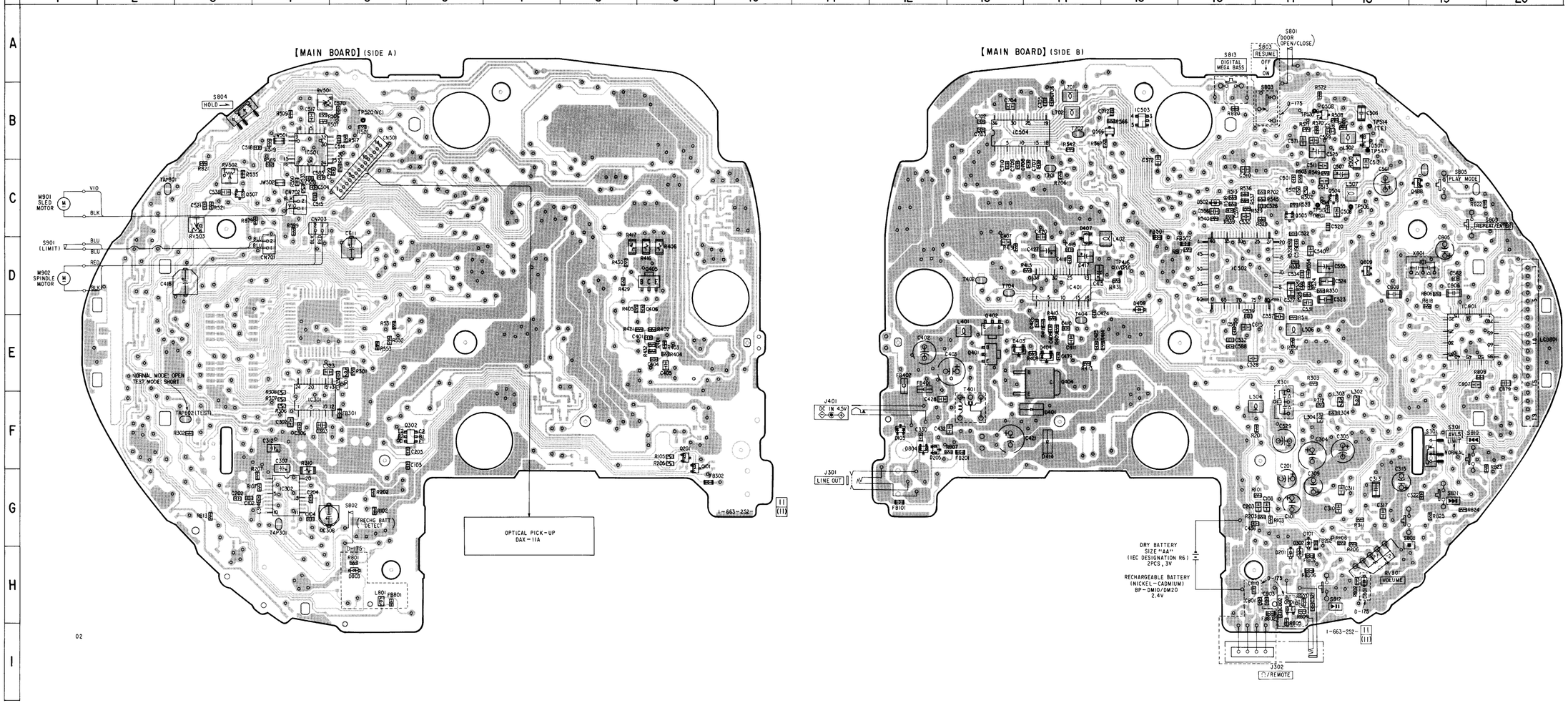

Note:

- ○— : parts extracted from the component side.
- ○ : Through hole.
- : Pattern on the side which is seen.

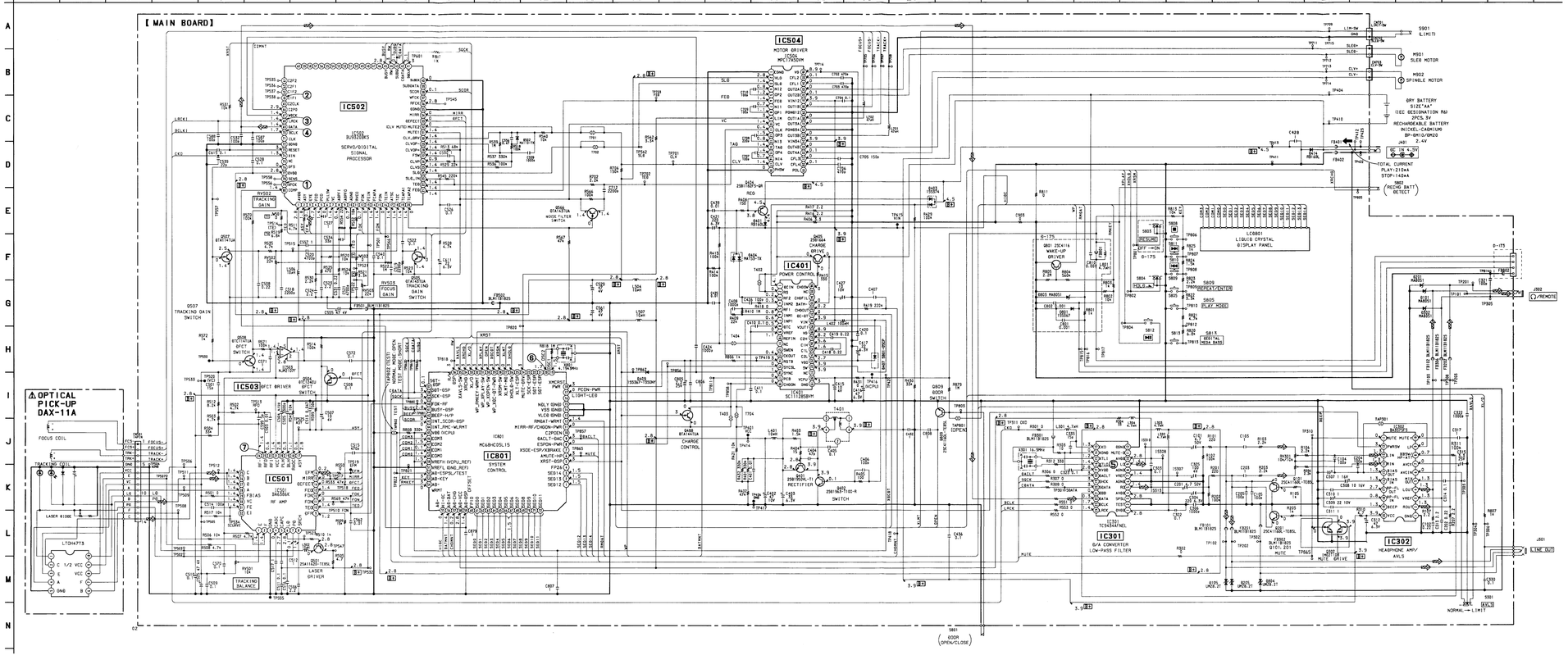

● WAVEFORMS

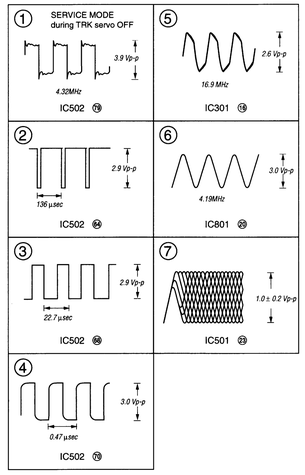

Note :

- All capacitors are in μF unless otherwise noted. pF: μμF 50WV or less are not indicated except for electrolytics and tantalums.
- All resistors are in Ω and ¼W or less unless otherwise specified.
- △ : internal component.

Note :	Note :
The components identified by mark △ or dotted line with mark △are critical for safety. Replace only with part number specified.	Les composants identifiés par une marque △sont critiques pour la sécurité. Ne les remplacer que par une pièce portant le numéro spécifié.

- B+ : B+ Line
- ▭ : adjustment for repair.
- Power voltage is dc 4.5 V and fed with regulated dc power supply from external power voltage jack (J401).
- Voltage and waveforms are dc with respect to ground under no-signal conditions.
  no mark : STOP
  ( ) : PLAY
- Voltages are taken with a VOM (Input impedance 10MΩ). Voltage variations may be noted due to normal production tolerances.
- Waveforms are taken with a oscilloscope. Voltage variations may be noted due to normal production tolerances.
- Circled numbers refer to waveforms.
- Signal path.
  ⇨ : CD

● IC BLOCK DIAGRAMS

IC301 TC9434AFNEL

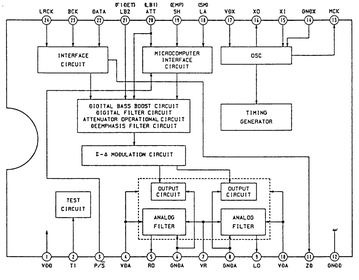

IC502 BU9320BKS

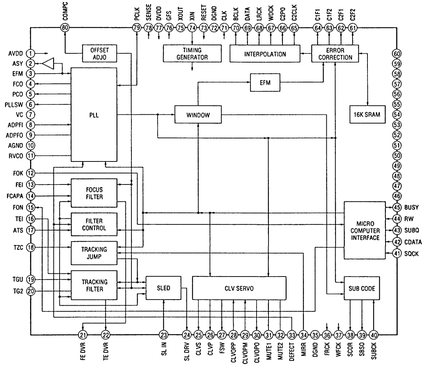

IC501 BA6386K

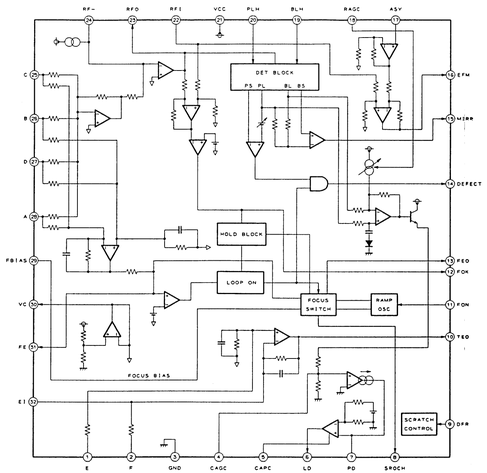

IC504 MPC17A50/SC250VMEL

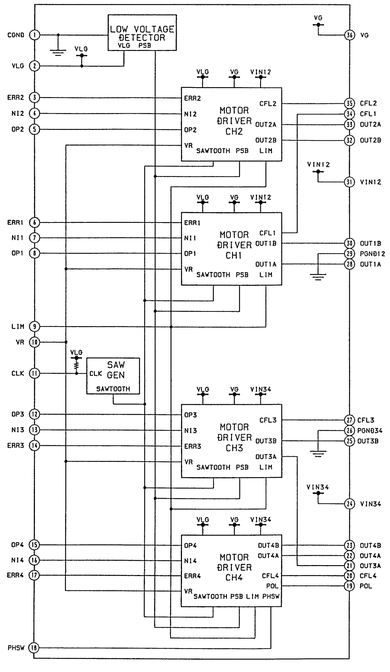

SECTION 8
EXPLODED VIEWS

NOTE :
- -XX, -X mean standardized parts, so they may have some difference from the original one.
- Color indication of Appearance Parts
  Example :
  KNOB, BALANCE (WHITE) ••• (RED)
  ↑ ↑
  Parts color Cabinet's color
- Items marked " * " are not stocked since they are seldom required for routine service. Some items should be anticipated when ordering these items.
- The mechanical parts with no reference number in the exploded views are not supplied.
- Hardware (# mark) list and accessories and packing materials are given in the last of this parts list.
- Abbreviation
  C&SA : Central and South America

The components identified by mark ⚠ or dotted line with mark ⚠ are critical for safety.
Replace only with part number specified.

Les composants identifiés par une marque ⚠sont critiques pour la sécurité.
Ne les remplacer que par une pièce portant le numéro spécifié.

8-1. CABINET SECTION

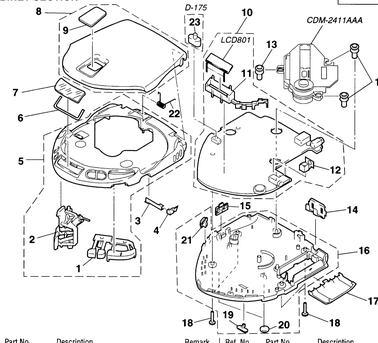

Ref. No.	Part No.	Description	Remark
1	4-986-056-11	BUTTON (OPERATE)	
2	4-986-057-01	BUTTON (OPEN)	
3	4-982-219-01	SPRING (DETECTOR)	
4	4-982-218-01	DETECTOR	
5	X-4947-857-1	CABINET(FRONT) SUB ASSY (EXCEPT D-175)	
5	X-4948-040-1	CABINET(FRONT) SUB ASSY (D-175)	
6	4-986-063-01	SHEET (LCD WINDOW), ADHESIVE	
7	4-986-059-01	WINDOW (LCD)	
8	X-4947-856-1	LID ASSY, UPPER (GRAY) (D-173)	
8	X-4948-031-1	LID ASSY, UPPER (GRAY) (D-171)	
8	X-4948-032-1	LID ASSY, UPPER (BLUE) (D-171)	
8	X-4948-033-1	LID ASSY, UPPER (GREEN) (D-171)	
8	X-4948-034-1	LID ASSY, UPPER (RED) (D-171)	
8	X-4948-035-1	LID ASSY, UPPER (BLACK) (D-171)	
8	X-4948-036-1	LID ASSY, UPPER (BLACK) (D-170AN)	
8	X-4948-037-1	LID ASSY, UPPER (BLACK) (D-175)	
8	X-4948-038-1	LID ASSY, UPPER (GRAY) (D-172CK)	
8	X-4948-058-1	LID ASSY, UPPER (La Fiesta) (GRAY) (D-171:C&SA)	
8	X-4948-059-1	LID ASSY, UPPER (BLUE) (D-170AN)	
8	X-4948-060-1	LID ASSY, UPPER (GREEN) (D-170AN)	
8	X-4948-187-1	LID ASSY, UPPER (La Fiesta) (BLUE) (D-171:C&SA)	
8	X-4948-188-1	LID ASSY, UPPER (La Fiesta) (GREEN) (D-171:C&SA)	
8	X-4948-189-1	LID ASSY, UPPER (La Fiesta) (RED) (D-171:C&SA)	
8	X-4948-190-1	LID ASSY, UPPER (La Fiesta) (BLACK) (D-171:C&SA)	

Ref. No.	Part No.	Description	Remark
8	X-4948-266-1	LID ASSY, UPPER (GRAY) (D-171V)	
8	X-4948-267-1	LID ASSY, UPPER (BLUE) (D-171V)	
8	X-4948-268-1	LID ASSY, UPPER (GREEN) (D-171V)	
8	X-4948-269-1	LID ASSY, UPPER (RED) (D-171V)	
9	4-986-060-01	WINDOW (DISC)	
10	A-3293-313-A	MAIN BOARD, COMPLETE (EXCEPT D-175)	
10	A-3293-318-A	MAIN BOARD, COMPLETE (D-175)	
11	4-986-058-01	HOLDER, LCD	
12	4-978-695-01	PLATE, TERMINAL, BATTERY	
13	4-990-219-01	INSULATOR	
14	4-978-696-01	TERMINAL BOARD (RELAY),BATTERY	
15	4-975-821-21	BUTTON (CHARGE)	
16	X-4947-858-1	CABINET (REAR) SUB ASSY (BLACK) (EXCEPT D-175)	
16	X-4948-080-1	CABINET (REAR) SUB ASSY (BLACK) (D-175)	
17	4-986-055-01	LID, BATTERY CASE (D-170AN,D-171)	
17	4-986-055-11	LID, BATTERY CASE (D-171V,D-172CK,D-173,D-175)	
18	3-336-395-01	SCREW (B2X10) (G), TAPPING	
19	4-984-751-11	KNOB (AVLS)	
20	4-966-278-01	FOOT, RUBBER	
21	4-984-747-11	KNOB (H-R)	
22	4-986-065-01	SPRING, TORSION	
23	4-986-062-01	KNOB (RESUME) (D-175)	
LCD801	1-801-544-11	DISPLAY PANEL, LIQUID CRYSTAL	

8-2. OPTICAL PICK-UP SECTION (CDM-2411AAA)

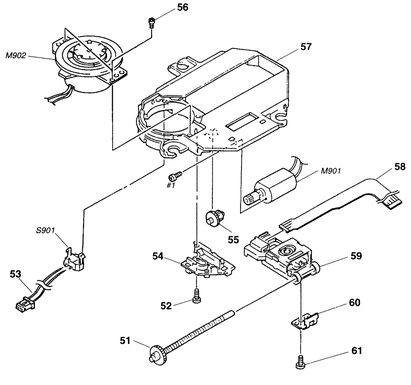

The components identified by mark ⚠ or dotted line with mark ⚠ are critical for safety.
Replace only with part number specified.

Les composants identifiés par une marque ⚠sont critiques pour la sécurité.
Ne les remplacer que par une pièce portant le numéro spécifié.

Ref. No.	Part No.	Description	Remark
51	A-3303-970-A	SCREW ASSY, FEED	
52	3-318-203-11	SCREW (B1.7X6), TAPPING	
53	1-690-539-21	LEAD (WITH CONNECTOR)	
54	4-972-163-01	SPRING, SLED	
55	4-974-003-01	GEAR (B)	
56	3-719-401-11	SCREW (B1.7), TAPPING	
* 57	4-972-162-01	CHASSIS	

Ref. No.	Part No.	Description	Remark
58	1-660-965-11	PC BOARD, SLIDE FLEXIBLE	
⚠59	X-4946-311-1	OPTICAL PICK-UP (DAX-11A)	
60	4-972-165-01	RACK	
61	4-973-631-01	SCREW	
M901	A-3303-403-A	MOTOR ASSY, SLED	
M902	A-3303-971-A	MOTOR ASSY, TURNTABLE (SPINDLE)	
S901	1-571-099-21	SWITCH (1 KEY) (LIMIT)	

SECTION 9
ELECTRICAL PARTS LIST

MAIN

NOTE :
- Due to standardization, replacements in the parts list may be different from the parts specified in the diagrams or the components used on the set.
- -XX, -X mean standardized parts, so they may have some difference from the original one.
- RESISTORS
  All resistors are in ohms
  METAL : Metal-film resistor
  METAL OXIDE :Metal oxide-film resistor
  F : nonflammable
- Items marked " * "are not stocked since they are seldom required for routine service. Some delay should be anticipated when ordering these items.
- SEMICONDUCTORS
  In each case, u : μ , for example :
  uA.... : μ A.... , uPA.... : μ PA....
  uPB.... : μ PB.... , uPC.... : μ PC....
  uPD.... : μ PD....
- CAPACITORS
  uF : μ F
- COILS
  uH : μ H
- Abbreviation
  CND : Canadian AUS : Australian
  JE : Tourist EA : Saudi Arabia
  CH : Chinese
  C&SA : Central and South America
  E13 : AC 220–230V area model
  E33 : AC100–240V area model

The components identified by mark ⚠ or dotted line with mark ⚠ are critical for safety.
Replace only with part number specified.

Les composants identifiés par une marque ⚠sont critiques pour la sécurité. Ne les remplacer que par une pièce portant le numéro spécifié.

When indicating parts by reference number, please include the board.

Ref. No.	Part No.	Description			Remark
	A-3293-313-A	MAIN BOARD, COMPLETE (EXCEPT D-175)			
	A-3293-318-A	MAIN BOARD, COMPLETE (D-175)			
		**********			
	4-986-058-01	HOLDER, LCD			
	4-978-695-01	PLATE, TERMINAL, BATTERY			
		< CAPACITOR >			
C101	1-126-794-11	ELECT	4.7uF	20%	50V
C102	1-165-128-11	CERAMIC CHIP	0.22uF		16V
C103	1-164-346-11	CERAMIC CHIP	1uF		16V
C104	1-162-953-11	CERAMIC CHIP	100PF	5%	50V
C105	1-162-953-11	CERAMIC CHIP	100PF	5%	50V
C201	1-126-794-11	ELECT	4.7uF	20%	50V
C202	1-165-128-11	CERAMIC CHIP	0.22uF		16V
C203	1-164-346-11	CERAMIC CHIP	1uF		16V
C204	1-162-953-11	CERAMIC CHIP	100PF	5%	50V
C205	1-162-953-11	CERAMIC CHIP	100PF	5%	50V
C302	1-163-038-91	CERAMIC CHIP	0.1uF		25V
C303	1-163-038-91	CERAMIC CHIP	0.1uF		25V
C304	1-124-635-00	ELECT	220uF	20%	6.3V
C305	1-124-433-00	ELECT	100uF	20%	4V
C306	1-162-964-11	CERAMIC CHIP	0.001uF	10%	50V
C307	1-135-091-00	TANTALUM CHIP	1uF	20%	16V
C308	1-124-779-00	ELECT CHIP	10uF	20%	16V
C309	1-126-783-11	ELECT	22uF	20%	10V
C310	1-164-346-11	CERAMIC CHIP	1uF		16V
C311	1-164-346-11	CERAMIC CHIP	1uF		16V
C312	1-126-205-11	ELECT CHIP	47uF	20%	6.3V
C313	1-164-337-11	CERAMIC CHIP	2.2uF		16V
C314	1-164-360-11	CERAMIC CHIP	0.1uF		16V
C315	1-126-162-11	ELECT	3.3uF	20%	50V
C317	1-164-346-11	CERAMIC CHIP	1uF		16V
C321	1-162-953-11	CERAMIC CHIP	100PF	5%	50V
C322	1-162-964-11	CERAMIC CHIP	0.001uF	10%	50V
C323	1-163-038-91	CERAMIC CHIP	0.1uF		25V
C330	1-107-826-11	CERAMIC CHIP	0.1uF	10%	16V
C335	1-162-917-11	CERAMIC CHIP	15PF	5%	50V
C401	1-162-970-11	CERAMIC CHIP	0.01uF	10%	25V
C402	1-126-785-11	ELECT	47uF	20%	10V
C403	1-127-485-00	ELECT(SOLID)	33uF	20%	6.3V
C404	1-162-923-11	CERAMIC CHIP	47PF	5%	50V
C405	1-164-004-11	CERAMIC CHIP	0.1uF	10%	25V
C406	1-162-953-11	CERAMIC CHIP	100PF	5%	50V
C407	1-164-346-11	CERAMIC CHIP	1uF		16V
C408	1-162-964-11	CERAMIC CHIP	0.001uF	10%	50V
C410	1-164-360-11	CERAMIC CHIP	0.1uF		16V
C411	1-163-038-91	CERAMIC CHIP	0.1uF		25V
C415	1-135-201-11	TANTALUM CHIP	10uF	20%	4V
C416	1-126-205-11	ELECT CHIP	47uF	20%	6.3V
C417	1-104-852-11	TANTAL. CHIP	22uF	20%	6.3V
C418	1-165-128-11	CERAMIC CHIP	0.22uF		16V
C419	1-165-128-11	CERAMIC CHIP	0.22uF		16V
C420	1-163-038-91	CERAMIC CHIP	0.1uF		25V
C421	1-124-635-00	ELECT	220uF	20%	6.3V
C424	1-162-964-11	CERAMIC CHIP	0.001uF	10%	50V
C425	1-162-970-11	CERAMIC CHIP	0.01uF	10%	25V
C426	1-162-953-11	CERAMIC CHIP	100PF	5%	50V
C427	1-135-216-11	TANTALUM CHIP	10uF	20%	10V
C428	1-164-346-11	CERAMIC CHIP	1uF		16V
C432	1-164-346-11	CERAMIC CHIP	1uF		16V
C436	1-107-826-11	CERAMIC CHIP	0.1uF	10%	16V
C439	1-162-970-11	CERAMIC CHIP	0.01uF	10%	25V
C501	1-162-917-11	CERAMIC CHIP	15PF	5%	50V
C503	1-162-970-11	CERAMIC CHIP	0.01uF	10%	25V
C504	1-162-962-11	CERAMIC CHIP	470PF	10%	50V
C505	1-162-967-11	CERAMIC CHIP	0.0033uF	10%	50V
C506	1-109-994-11	CERAMIC CHIP	2.2uF	10%	10V
C507	1-135-201-11	TANTALUM CHIP	10uF	20%	4V
C508	1-163-038-91	CERAMIC CHIP	0.1uF		25V
C509	1-163-038-91	CERAMIC CHIP	0.1uF		25V
C510	1-163-038-91	CERAMIC CHIP	0.1uF		25V
C511	1-163-038-91	CERAMIC CHIP	0.1uF		25V
C512	1-164-346-11	CERAMIC CHIP	1uF		16V
C513	1-163-809-11	CERAMIC CHIP	0.047uF	10%	25V
C514	1-162-953-11	CERAMIC CHIP	100PF	5%	50V
C515	1-162-962-11	CERAMIC CHIP	470PF	10%	50V
C516	1-163-038-91	CERAMIC CHIP	0.1uF		25V
C517	1-109-982-11	CERAMIC CHIP	1uF	10%	10V
C518	1-162-966-11	CERAMIC CHIP	0.0022uF	10%	50V
C519	1-162-966-11	CERAMIC CHIP	0.0022uF	10%	50V
C520	1-162-968-11	CERAMIC CHIP	0.0047uF	10%	50V
C521	1-162-968-11	CERAMIC CHIP	0.0047uF	10%	50V
C522	1-107-826-11	CERAMIC CHIP	0.1uF	10%	16V
C523	1-109-994-11	CERAMIC CHIP	2.2uF	10%	10V
C524	1-109-994-11	CERAMIC CHIP	2.2uF	10%	10V
C525	1-104-908-11	TANTAL. CHIP	47uF	20%	4V
C526	1-164-360-11	CERAMIC CHIP	0.1uF		16V
C527	1-113-677-11	CERAMIC CHIP	1uF		25V
C528	1-163-038-91	CERAMIC CHIP	0.1uF		25V
C529	1-126-513-11	ELECT	47uF	20%	4V

MAIN

Ref. No.	Part No.	Description			Remark
C530	1-164-346-11	CERAMIC CHIP	1uF		16V
C531	1-164-489-11	CERAMIC CHIP	0.22uF	10%	16V
C532	1-162-953-11	CERAMIC CHIP	100PF	5%	50V
C534	1-162-921-11	CERAMIC CHIP	33PF	5%	50V
C538	1-164-489-11	CERAMIC CHIP	0.22uF	10%	16V
C539	1-162-919-11	CERAMIC CHIP	22PF	5%	50V
C540	1-164-004-11	CERAMIC CHIP	0.1uF	10%	25V
C555	1-104-908-11	TANTAL. CHIP	47uF	20%	4V
C556	1-164-005-11	CERAMIC CHIP	0.47uF		25V
C557	1-164-346-11	CERAMIC CHIP	1uF		16V
C559	1-162-964-11	CERAMIC CHIP	0.001uF	10%	50V
C561	1-126-513-11	ELECT	47uF	20%	4V
C562	1-162-970-11	CERAMIC CHIP	0.01uF	10%	25V
C570	1-164-360-11	CERAMIC CHIP	0.1uF		16V
C571	1-109-982-11	CERAMIC CHIP	1uF	10%	10V
C572	1-163-038-91	CERAMIC CHIP	0.1uF		25V
C587	1-162-953-11	CERAMIC CHIP	100PF	5%	50V
C588	1-162-953-11	CERAMIC CHIP	100PF	5%	50V
C599	1-162-910-11	CERAMIC CHIP	5PF	0.25PF	50V
C611	1-124-778-00	ELECT CHIP	22uF	20%	6.3V
C615	1-163-038-91	CERAMIC CHIP	0.1uF		25V
C702	1-162-962-11	CERAMIC CHIP	470PF	10%	50V
C703	1-162-962-11	CERAMIC CHIP	470PF	10%	50V
C704	1-163-038-91	CERAMIC CHIP	0.1uF		25V
C705	1-162-955-11	CERAMIC CHIP	150PF	5%	50V
C706	1-162-962-11	CERAMIC CHIP	470PF	10%	50V
C707	1-162-953-11	CERAMIC CHIP	100PF	5%	50V
C708	1-162-957-11	CERAMIC CHIP	220PF	5%	50V
C709	1-162-953-11	CERAMIC CHIP	100PF	5%	50V
C710	1-162-953-11	CERAMIC CHIP	100PF	5%	50V
C712	1-162-966-11	CERAMIC CHIP	0.0022uF	10%	50V
C801	1-162-964-11	CERAMIC CHIP	0.001uF	10%	50V (D-175)
C802	1-162-964-11	CERAMIC CHIP	0.001uF	10%	50V (D-175)
C805	1-124-257-00	ELECT	2.2uF	20%	50V
C806	1-113-677-11	CERAMIC CHIP	1uF		25V
C807	1-164-346-11	CERAMIC CHIP	1uF		16V
C808	1-113-677-11	CERAMIC CHIP	1uF		25V
C810	1-162-964-11	CERAMIC CHIP	0.001uF	10%	50V (D-175)
C879	1-164-346-11	CERAMIC CHIP	1uF		16V
C903	1-216-864-11	METAL CHIP	0	5%	1/16W
		< CONNECTOR >			
CN501	1-566-530-11	CONNECTOR, FPC (ZIF) 14P			
* CN701	1-695-320-51	PIN, CONNECTOR (1.5MM) (SMD) 2P			
* CN702	1-695-320-31	PIN, CONNECTOR (1.5MM) (SMD) 2P			
* CN703	1-695-320-21	PIN, CONNECTOR (1.5MM) (SMD) 2P			
		< DIODE >			
D101	8-719-420-90	DIODE MA8051-M			
D105	8-719-039-99	DIODE UMZ8.2T			
D201	8-719-420-90	DIODE MA8051-M			
D205	8-719-039-99	DIODE UMZ8.2T			
D302	8-719-420-90	DIODE MA8051-M			
D401	8-719-048-98	DIODE RB160L-40TE25			
D403	8-719-049-10	DIODE 1SS374-TE85L			
D404	8-719-800-76	DIODE 1SS226			
D407	8-719-938-72	DIODE SB01-05CP			

Ref. No.	Part No.	Description			Remark
D409	8-719-049-09	DIODE 1SS367-T3SONY			
D414	8-719-048-98	DIODE RB160L-40TE25			
D502	8-719-404-46	DIODE MA110			
D801	8-719-049-09	DIODE 1SS367-T3SONY (D-175)			
D803	8-719-420-90	DIODE MA8051-M (D-175)			
D804	8-719-039-99	DIODE UMZ8.2T			
		< FERRITE BEAD >			
FB101	1-500-444-11	INDUCTOR	0UH		
FB102	1-500-444-11	INDUCTOR	0UH		
FB201	1-500-444-11	INDUCTOR	0UH		
FB202	1-500-444-11	INDUCTOR	0UH		
FB301	1-500-444-11	INDUCTOR	0UH		
FB302	1-500-444-11	INDUCTOR	0UH		
FB306	1-500-444-11	INDUCTOR	0UH		
FB401	1-500-451-11	INDUCTOR	0UH		
FB402	1-500-451-11	INDUCTOR	0UH		
FB501	1-500-444-11	INDUCTOR	0UH		
FB502	1-500-444-11	INDUCTOR	0UH		
FB801	1-500-444-11	INDUCTOR	0UH (D-175)		
FB802	1-216-864-11	METAL CHIP	0	5%	1/16W (D-175)
		< IC >			
IC301	8-759-459-18	IC TC9434AFNEL			
IC302	8-759-450-64	IC BA3575FS-E2			
IC401	8-759-450-67	IC SC111285BVMEL			
IC501	8-759-432-83	IC BA6386K			
IC502	8-759-455-04	IC BU9320BKS			
IC503	8-759-710-79	IC NJM2107F			
IC504	8-759-453-86	IC MPC17A50/SC250VMEL			
IC801	8-759-462-34	IC MC68HC05L15SC442705CPB			
		< JACK >			
J301	1-778-696-11	JACK (LINE OUT)			
J302	1-580-680-31	JACK (Ω/REMOTE) (D-175)			
J302	1-774-804-11	JACK (Ω) (EXCEPT D-175)			
J401	1-778-153-21	JACK,DC (POLARITY UNIFIED TYPE) (DC IN 4.5V)			
		< JUMPER RESISTOR >			
JW501	1-216-295-00	METAL CHIP	0	5%	1/10W
JW502	1-216-295-00	METAL CHIP	0	5%	1/10W
		< COIL >			
L301	1-412-002-31	INDUCTOR CHIP	4.7uH		
L302	1-412-002-31	INDUCTOR CHIP	4.7uH		
L303	1-412-002-31	INDUCTOR CHIP	4.7uH		
L304	1-412-002-31	INDUCTOR CHIP	4.7uH		
L401	1-414-398-11	INDUCTOR	10uH		
L402	1-414-404-11	INDUCTOR	100uH		
L502	1-414-398-11	INDUCTOR	10uH		
L504	1-414-398-11	INDUCTOR	10uH		
L506	1-414-398-11	INDUCTOR	10uH		
L507	1-414-398-11	INDUCTOR	10uH		
L701	1-414-402-11	INDUCTOR	47uH		
L702	1-414-402-11	INDUCTOR	47uH		
L801	1-412-002-31	INDUCTOR CHIP	4.7uH (D-175)		

Ref. No.	Part No.	Description				Remark
		< LIQUID CRYSTAL DISPLAY >				
LCD801	1-801-544-11	DISPLAY PANEL, LIQUID CRYSTAL				
		< TRANSISTOR >				
Q101	8-729-231-74	TRANSISTOR	2SC4116-GL			
Q201	8-729-231-74	TRANSISTOR	2SC4116-GL			
Q302	8-729-907-39	TRANSISTOR	IMD2			
Q401	8-729-320-66	TRANSISTOR	2SD1870			
Q402	8-729-923-40	TRANSISTOR	2SD1963-T101-R			
Q404	8-729-921-93	TRANSISTOR	2SB1182F5-QR			
Q405	8-729-920-85	TRANSISTOR	2SD1664-QR			
Q488	8-729-028-92	TRANSISTOR	DTA144TUA-T106			
Q501	8-729-216-22	TRANSISTOR	2SA1162-G			
Q504	8-729-029-06	TRANSISTOR	DTC124EUA-T106			
Q505	8-729-028-87	TRANSISTOR	DTA143TUA-T106			
Q507	8-729-028-74	TRANSISTOR	DTA114TUA-T106			
Q508	8-729-028-97	TRANSISTOR	DTC114TUA-T106			
Q566	8-729-028-87	TRANSISTOR	DTA143TUA-T106			
Q801	8-729-231-74	TRANSISTOR	2SC4116-GL (D-175)			
Q809	8-729-231-74	TRANSISTOR	2SC4116-GL			
		< RESISTOR >				
R101	1-216-813-11	METAL CHIP	220	5%	1/16W	
R102	1-216-845-11	METAL CHIP	100K	5%	1/16W	
R103	1-216-825-11	METAL CHIP	2.2K	5%	1/16W	
R105	1-216-821-11	METAL CHIP	1K	5%	1/16W	
R106	1-216-825-11	METAL CHIP	2.2K	5%	1/16W	
R107	1-216-789-11	METAL CHIP	2.2	5%	1/16W	
R201	1-216-813-11	METAL CHIP	220	5%	1/16W	
R202	1-216-845-11	METAL CHIP	100K	5%	1/16W	
R203	1-216-825-11	METAL CHIP	2.2K	5%	1/16W	
R205	1-216-821-11	METAL CHIP	1K	5%	1/16W	
R206	1-216-825-11	METAL CHIP	2.2K	5%	1/16W	
R207	1-216-789-11	METAL CHIP	2.2	5%	1/16W	
R301	1-216-864-11	METAL CHIP	0	5%	1/16W	
R302	1-216-864-11	METAL CHIP	0	5%	1/16W	
R303	1-216-797-11	METAL CHIP	10	5%	1/16W	
R304	1-216-803-11	METAL CHIP	33	5%	1/16W	
R306	1-216-864-11	METAL CHIP	0	5%	1/16W	
R307	1-216-864-11	METAL CHIP	0	5%	1/16W	
R308	1-216-864-11	METAL CHIP	0	5%	1/16W	
R310	1-216-142-00	METAL GLAZE	4.7	5%	1/8W	
R311	1-216-845-11	METAL CHIP	100K	5%	1/16W	
R312	1-216-815-11	METAL CHIP	330	5%	1/16W	
R401	1-218-907-11	METAL GLAZE	330K	0.50%	1/16W	
R402	1-218-887-11	METAL GLAZE	47K	0.50%	1/16W	
R403	1-216-823-11	METAL CHIP	1.5K	5%	1/16W	
R404	1-216-799-11	METAL CHIP	15	5%	1/16W	
R405	1-216-809-11	METAL CHIP	100	5%	1/16W	
R406	1-216-138-00	METAL CHIP	3.3	5%	1/8W	
R408	1-216-811-11	METAL CHIP	150	5%	1/16W	
R409	1-216-837-11	METAL CHIP	22K	5%	1/16W	
R410	1-216-857-11	METAL CHIP	1M	5%	1/16W	
R413	1-216-845-11	METAL CHIP	100K	5%	1/16W	
R414	1-216-845-11	METAL CHIP	100K	5%	1/16W	
R415	1-216-815-11	METAL CHIP	330	5%	1/16W	
R416	1-216-134-00	METAL CHIP	2.2	5%	1/8W	
R417	1-216-134-00	METAL CHIP	2.2	5%	1/8W	
R418	1-216-864-11	METAL CHIP	0	5%	1/16W	
R419	1-216-849-11	METAL CHIP	220K	5%	1/16W	
R421	1-216-833-11	METAL CHIP	10K	5%	1/16W	
R429	1-218-895-11	METAL GLAZE	100K	0.50%	1/16W	
R430	1-218-883-11	METAL GLAZE	33K	0.50%	1/16W	
R431	1-216-864-11	METAL CHIP	0	5%	1/16W	
R432	1-218-907-11	METAL GLAZE	330K	0.50%	1/16W	
R501	1-216-864-11	METAL CHIP	0	5%	1/16W	
R502	1-216-829-11	METAL CHIP	4.7K	5%	1/16W	
R503	1-216-829-11	METAL CHIP	4.7K	5%	1/16W	
R504	1-216-839-11	METAL CHIP	33K	5%	1/16W	
R505	1-216-142-00	METAL GLAZE	4.7	5%	1/8W	
R506	1-216-833-11	METAL CHIP	10K	5%	1/16W	
R507	1-216-829-11	METAL CHIP	4.7K	5%	1/16W	
R508	1-216-829-11	METAL CHIP	4.7K	5%	1/16W	
R509	1-216-835-11	METAL CHIP	15K	5%	1/16W	
R510	1-216-821-11	METAL CHIP	1K	5%	1/16W	
R511	1-216-829-11	METAL CHIP	4.7K	5%	1/16W	
R512	1-216-832-11	METAL CHIP	8.2K	5%	1/16W	
R513	1-216-843-11	METAL CHIP	68K	5%	1/16W	
R514	1-216-845-11	METAL CHIP	100K	5%	1/16W	
R517	1-216-833-11	METAL CHIP	10K	5%	1/16W	
R518	1-216-845-11	METAL CHIP	100K	5%	1/16W	
R519	1-216-831-11	METAL CHIP	6.8K	5%	1/16W	
R520	1-218-871-11	METAL GLAZE	10K	0.50%	1/16W	
R521	1-216-827-11	METAL CHIP	3.3K	5%	1/16W	
R522	1-216-857-11	METAL CHIP	1M	5%	1/16W	
R523	1-216-833-11	METAL CHIP	10K	5%	1/16W	
R524	1-218-871-11	METAL GLAZE	10K	0.50%	1/16W	
R525	1-216-817-11	METAL CHIP	470	5%	1/16W	
R528	1-216-829-11	METAL CHIP	4.7K	5%	1/16W	
R529	1-216-837-11	METAL CHIP	22K	5%	1/16W	
R530	1-216-825-11	METAL CHIP	2.2K	5%	1/16W	
R531	1-216-833-11	METAL CHIP	10K	5%	1/16W	
R532	1-218-877-11	METAL GLAZE	18K	0.50%	1/16W	
R533	1-216-841-11	METAL CHIP	47K	5%	1/16W	
R535	1-216-829-11	METAL CHIP	4.7K	5%	1/16W	
R536	1-216-845-11	METAL CHIP	100K	5%	1/16W	
R537	1-216-851-11	METAL CHIP	330K	5%	1/16W	
R539	1-216-857-11	METAL CHIP	1M	5%	1/16W	
R540	1-216-833-11	METAL CHIP	10K	5%	1/16W	
R542	1-216-827-11	METAL CHIP	3.3K	5%	1/16W	
R545	1-216-849-11	METAL CHIP	220K	5%	1/16W	
R549	1-216-833-11	METAL CHIP	10K	5%	1/16W	
R550	1-216-864-11	METAL CHIP	0	5%	1/16W	
R551	1-216-864-11	METAL CHIP	0	5%	1/16W	
R552	1-216-864-11	METAL CHIP	0	5%	1/16W	
R553	1-216-864-11	METAL CHIP	0	5%	1/16W	
R554	1-218-879-11	METAL GLAZE	22K	0.50%	1/16W	
R566	1-216-845-11	METAL CHIP	100K	5%	1/16W	
R567	1-216-841-11	METAL CHIP	47K	5%	1/16W	
R569	1-216-841-11	METAL CHIP	47K	5%	1/16W	
R570	1-216-845-11	METAL CHIP	100K	5%	1/16W	
R571	1-216-845-11	METAL CHIP	100K	5%	1/16W	
R572	1-216-821-11	METAL CHIP	1K	5%	1/16W	
R599	1-216-847-11	METAL CHIP	150K	5%	1/16W	
R702	1-216-825-11	METAL CHIP	2.2K	5%	1/16W	
R706	1-216-847-11	METAL CHIP	150K	5%	1/16W	
R801	1-216-821-11	METAL CHIP	1K	5%	1/16W	(D-175)

MAIN

Ref. No.	Part No.	Description			Remark
R802	1-216-833-11	METAL CHIP	10K	5%	1/16W
R803	1-216-821-11	METAL CHIP	1K	5%	1/16W
R804	1-216-854-11	METAL CHIP	560K	5%	1/16W (D-175)
R805	1-216-861-11	METAL CHIP	2.2M	5%	1/16W (D-175)
R806	1-216-821-11	METAL CHIP	1K	5%	1/16W
R807	1-216-821-11	METAL CHIP	1K	5%	1/16W
R808	1-216-851-11	METAL CHIP	330K	5%	1/16W
R813	1-216-833-11	METAL CHIP	10K	5%	1/16W
R817	1-216-821-11	METAL CHIP	1K	5%	1/16W
R818	1-216-857-11	METAL CHIP	1M	5%	1/16W
R820	1-216-831-11	METAL CHIP	6.8K	5%	1/16W
R821	1-216-829-11	METAL CHIP	4.7K	5%	1/16W
R822	1-216-827-11	METAL CHIP	3.3K	5%	1/16W
R823	1-216-825-11	METAL CHIP	2.2K	5%	1/16W
R824	1-216-823-11	METAL CHIP	1.5K	5%	1/16W
R825	1-216-821-11	METAL CHIP	1K	5%	1/16W
R879	1-216-857-11	METAL CHIP	1M	5%	1/16W
		< VARIABLE RESISTOR >			
RV301	1-225-226-11	RES, VAR, CARBON 10K/10K (VOLUME)			
RV501	1-223-586-11	RES, ADJ, CARBON 10K (TRACKING BALANCE)			
RV502	1-223-587-11	RES, ADJ, CARBON 22K (TRACKING GAIN)			
RV503	1-223-587-11	RES, ADJ, CARBON 22K (FOCUS GAIN)			
		< SWITCH >			
S301	1-572-922-11	SWITCH, SLIDE (AVLS)			
S801	1-762-822-11	SWITCH, PUSH (1 KEY) (DOOR OPEN/CLOSE)			
S802	1-762-455-21	SWITCH, PUSH (1 KEY) (RECHARGEABLE BATT DETECT)			
S803	1-553-977-00	SWITCH, SLIDE (RESUME) (D-175)			
S804	1-572-922-11	SWITCH, SLIDE (HOLD ▬)			
S805	1-692-014-11	SWITCH, KEY BOARD (PLAY MODE)			
S808	1-692-014-11	SWITCH, KEY BOARD (■)			
S809	1-692-014-11	SWITCH, KEY BOARD (REPEAT/ENTER)			
S810	1-692-014-11	SWITCH, KEY BOARD (⏮)			
S811	1-692-014-11	SWITCH, KEY BOARD (⏭)			
S812	1-692-014-11	SWITCH, KEY BOARD (▶II)			
S813	1-554-088-00	SWITCH, KEY BOARD (DIGITAL MEGA BASS)			
		< TRANSFORMER >			
T401	1-429-951-11	TRANSFORMER, DC/DC CONVERTER			
		< VIBRATOR >			
X301	1-760-307-11	VIBRATOR, CERAMIC (16.9MHz)			
X801	1-577-101-11	VIBRATOR, CERAMIC (4.1943MHz)			

****

MISCELLANEOUS
****

Ref. No.	Part No.	Description	Remark
53	1-690-530-21	LEAD (WITH CONNECTOR)	
58	1-660-965-11	PC BOARD, SLIDE FLEXIBLE	
⚠59	X-4946-311-1	OPTICAL PICK-UP (DAX-11A)	
LCD801	1-801-544-11	DISPLAY PANEL, LIQUID CRYSTAL	
M901	A-3303-403-A	MOTOR ASSY, SLED	
M902	A-3303-971-A	MOTOR ASSY, TURNTABLE (SPINDLE)	
S901	1-571-099-21	SWITCH (1 KEY) (LIMIT)	

****

ACCESSORIES& PACKING MATERIALS
****

Ref. No.	Part No.	Description	Remark
⚠	1-467-007-21	ADAPTOR, AC (AC-E455) (AUS)	
⚠	1-467-009-11	ADAPTOR, AC (AC-E455) (US,CND,C&SA)	
⚠	1-467-012-11	ADAPTOR, AC (AC-E455) (EA)	
⚠	1-467-550-11	ADAPTOR, AC (AC-E455A) (E33)	
⚠	1-473-115-11	ADAPTOR, AC (AC-E455D) (D-171/D-173/D-175:UK)	
⚠	1-473-116-31	ADAPTOR, AC (AC-E455D) (D-171/D-173/D175:AEP,E13,CH,D-171V/D-172CK:E13,CH)	
	1-528-444-11	BATTERY PACK (BP-DM10) (D-173:CND,E,AUS,CH,D-175:E13,E33,CH)	
	1-528-444-31	BATTERY PACK (BP-DM10) (US)	
	1-528-444-81	BATTERY PACK (BP-DM10) (D-173/D-175:AEP,UK)	
	1-532-433-11	FUSE, GLASS TUBE (1A) (D-172CK:EXEPT EA)	
	1-559-906-32	CORD, CONNECTION (EXEPT D-170AN/D-172CK:AEP,UK,D-175:JE)	
⚠	1-569-007-11	ADAPTOR, CONVERSION 2P (E33,D-170AN:JE,172CK:CH)	
⚠	1-569-008-11	ADAPTOR, CONVERSION 2P (E13,EA,D-171/D-173/D-175:CH)	
	2-201-810-00	TAPE, MAGIC (D-172CK:EXCEPT EA)	
	3-810-764-11	MANUAL, INSTRUCTION (SPANISH) (D-172CK:E33,C&SA)	
	3-810-764-21	MANUAL, INSTRUCTION (ENGLISH) (D-172CK:EXCEPT EA)	
	3-810-764-31	MANUAL, INSTRUCTION (FRENCH) (D-172CK:CND)	
	3-810-764-41	MANUAL, INSTRUCTION (DUTCH) (D-172CK:AEP)	
	3-810-764-51	MANUAL, INSTRUCTION (SWEDISH) (D-172CK:AEP)	
	3-810-764-61	MANUAL, INSTRUCTION (PORTUGUESE) (D-172CK:AEP)	
	3-810-764-71	MANUAL, INSTRUCTION (GERMAN) (D-172CK:AEP)	
	3-810-764-81	MANUAL, INSTRUCTION (ITALIAN) (D-172CK:AEP)	
	3-856-478-11	MANUAL, INSTRUCTION (CHINESE) (D-172CK:E13)	
	3-856-478-21	MANUAL, INSTRUCTION (ENGLISH) (D-172CK:E13)	
	3-859-280-01	MANUAL, INSTRUCTION (ENGLISH,JAPANESE) (JE)	
	3-859-280-11	MANUAL, INSTRUCTION (SPANISH) (AEP,E33,C&SA,JE)	
	3-859-280-21	MANUAL, INSTRUCTION (ENGLISH) (CND,AEP,UK,E33,C&SA,AUS,JE,EA)	
	3-859-280-31	MANUAL, INSTRUCTION (FRENCH) (CND,AEP,JE)	
	3-859-280-41	MANUAL, INSTRUCTION (DUTCH) (AEP)	
	3-859-280-51	MANUAL, INSTRUCTION (SWEDISH) (AEP)	
	3-859-280-61	MANUAL, INSTRUCTION (PORTUGUESE) (AEP)	

The components identified by mark ⚠ or dotted line with mark ⚠ are critical for safety. Replace only with part number specified.	Les composants identifiés par une marque ⚠sont critiques pour la sécurité. Ne les remplacer que par une pièce portant le numéro spécifié.

Ref. No.	Part No.	Description	Remark
	3-859-280-71	MANUAL, INSTRUCTION (GERMAN) (AEP)	
	3-859-280-81	MANUAL, INSTRUCTION (ITALIAN) (AEP)	
	3-859-280-91	MANUAL, INSTRUCTION (CHINESE) (JE)	
	3-859-281-11	MANUAL, INSTRUCTION (CHINESE) (CH)	
	3-859-281-21	MANUAL, INSTRUCTION (E13,CH) (ENGLISH)	
	3-859-282-11	MANUAL, INSTRUCTION (JE) (KOREAN)	
	8-916-813-90	CORD,CAR BATTERY DCC-E2455	(D-172CK:EXCEPT AEP,UK)
	8-917-547-90	REMOTE COMMANDER,SONY RM-DM23	(D-170AN:JE,D175)
	8-951-804-90	PACK, CAR CONNECTING CPA-7 SET	(D-172CK:C&SA)
	8-951-804-92	CD ACCESSORY CPA-7//C1	(D-172CK:CND,E33,AUS)
	8-951-814-90	PLATE, MOUNT CPM-401P SET	(D-172CK:EXCEPT EA,CH)
	8-953-342-93	HEADPHONE MDR-24/K1 SET (US)	
	8-953-537-90	HEADPHONE MDR-E741MP//K3 SET	(D-170AN:JE,D-175)
	8-953-538-90	HEADPHONE MDR-E741//K2 SET	(D-170AN:AEP,UK,D-171/D-172CK/D-173:EXCEPT US)
	8-953-546-91	HEADPHONE MDR-E741V//K SET (D-171V)	

****

****

HARDWARE LIST

****

#1	7-627-850-17	SCREW,PRECISION +P 1.4X2.5	

9-923-149-11

Sony Corporation
Personal A&V Products Company

97C0292-1
Printed in Japan © 1997.3
Published by Quality Engineering Dept.
(Shibaura)

D-170AN/171/171V/172CK/173/175

SONY

SERVICE MANUAL

US Model
D-173

Canadian Model
Australian Model
D-171/172CK/173

AEP Model
D-170AN/171/171V/172CK/173/175

UK Model
D-170AN/171/172CK/173/175

E Model
D-171/172CK/173/175

Chinese Model
D-171/172CK/173/175

Tourist Model
D-170AN/175

SUPPLEMENT - 1

File this Supplement with the Service Manual.

Subject :
- **ADDITION OF METALLIC BLUE AND METALLIC GREEN MODEL FOR D-173 (Australian) MODEL.**

(ECN-CD750337)

The color of D-173 (Australian) model was originally gray, but a metallic blue and a metallic green model has been added.
Consequently, added parts are listed for new type.
Refer to original service manual previously issued for the other information.

Page	Ref. No.	Part No.	Description
27	8	X-4948-911-1	LID ASSY, UPPER (METALLIC BLUE)
		X-4948-912-1	LID ASSY, UPPER (METALLIC GREEN)

9-923-149-81

Sony Corporation
Personal A&V Products Company

97F0292-1
Printed in Japan © 1997.6
Published by Quality Engineering Dept. (Shibaura)

D-170AN/171/171V/ 172CK/173/175

SONY

SERVICE MANUAL

US Model
D-173

Canadian Model
Australian Model
D-171/172CK/173

AEP Model
D-170AN/171/171V/172CK/173/175

UK Model
D-170AN/171/172CK/173/175

E Model
D-171/172CK/173/175

Chinese Model
D-171/172CK/173/ 175

Tourist Model
D-170AN/175

SUPPLEMENT - 2

File this Supplement with the Service Manual.

Subject :
- **CHANGE OF MAIN BOARD.**
- **CORRECTION**

(ECN-CD750459)

9-923-149-82

Sony Corporation
Personal A&V Products Company

97I0293-1
Printed in Japan © 1997.9
Published by Quality Engineering Dept. (Shibaura)

- **CHANGE OF MAIN BOARD**

The main board have been changed.
Printed wiring board and schematic diagram of new type, and changed parts list are described in this Supplement-2.
Refer to original service manual (9-923-149-11), and Supplement-1 (9-923-149-81) previously issued for the other information.

NEW TYPE IDENTIFICATION

[MAIN BOARD] (Side B)

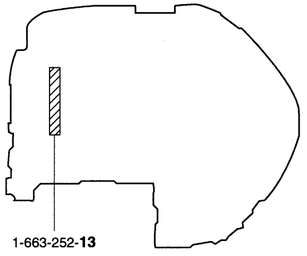

- **CHANGE OF ELECTRICAL PARTS LIST**

MAIN (Service Manual See page 29 to 32)

	Former Type					New type					
Ref. No.	Part No.	Description				Part No.	Description				Remark
C309	1-126-783-11	ELECT	22uF	20%	10V	1-126-794-11	ELECT	4.7uF	20%	50V	Changed
C330	1-107-826-11	CERAMIC CHIP	0.1uF	10%	16V	————					Deleted
C507	1-135-201-11	TANTALUM CHIP	10uF	20%	4V	————					Deleted
C508	1-163-038-91	CERAMIC CHIP	0.1uF		25V	————					Deleted
C513	1-163-809-11	CERAMIC CHIP	0.047uF	10%	25V	————					Deleted
C522	1-107-826-11	CERAMIC CHIP	0.1uF	10%	16V	1-216-833-11	METAL CHIP	10K	5%	1/16W	Changed
C533	————					1-164-004-11	CERAMIC CHIP	0.1uF	10%	25V	Added
C535	————					1-164-346-11	CERAMIC CHIP	1uF		16V	Added
C562	1-162-970-11	CERAMIC CHIP	0.01uF	10%	25V	1-165-176-11	CERAMIC CHIP	0.047uF	10%	16V	Changed
C570	1-164-360-11	CERAMIC CHIP	0.1uF		16V	————					Deleted
C709	1-162-953-11	CERAMIC CHIP	100PF	5%	50V	1-162-962-11	CERAMIC CHIP	470PF	10%	50V	Changed
C712	1-162-966-11	CERAMIC CHIP	0.0022uF	10%	50V	1-162-962-11	CERAMIC CHIP	470PF	10%	50V	Changed
C715	————					1-164-346-11	CERAMIC CHIP	1uF		16V	Added
C805	1-124-257-00	ELECT	2.2uF	20%	50V	————					Deleted
C806	1-113-677-11	CERAMIC CHIP	1uF		25V	1-164-337-11	CERAMIC CHIP	2.2uF		16V	Changed
C903	1-216-864-11	METAL CHIP	0	5%	1/16W	1-216-864-11	METAL CHIP	0	5%	1/16W (D-175)	Changed
D806	————					8-719-420-90	DIODE MA8051-M (D-175)				Added
IC401	8-759-450-67	IC SC111285BVMEL				8-759-474-73	IC MPC1825B/SC285BVMEL				Changed
IC502	8-759-455-04	IC BU9320BKS				8-759-474-74	IC BU9321BKS				Changed
Q504	8-729-029-06	TRANSISTOR DTC124EUA-T106				————					Deleted
Q505	8-729-028-87	TRANSISTOR DTA143TUA-T106				————					Deleted
Q566	8-729-028-87	TRANSISTOR DTA143TUA-T106				————					Deleted
R514	1-216-845-11	METAL CHIP	100K	5%	1/16W	————					Deleted
R519	1-216-831-11	METAL CHIP	6.8K	5%	1/16W	1-216-827-11	METAL CHIP	3.3K	5%	1/16W	Changed
R523	1-216-833-11	METAL CHIP	10K	5%	1/16W	1-107-826-11	CERAMIC CHIP	0.1uF	10%	16V	Changed
R526	————					1-216-864-11	METAL CHIP	0	5%	1/16W	Added
R546	————					1-216-825-11	METAL CHIP	2.2K	5%	1/16W	Added
R547	————					1-216-845-11	METAL CHIP	100K	5%	1/16W	Added
R566	1-216-845-11	METAL CHIP	100K	5%	1/16W	1-216-864-11	METAL CHIP	0	5%	1/16W	Changed
R567	1-216-841-11	METAL CHIP	47K	5%	1/16W	————					Deleted
R570	1-216-845-11	METAL CHIP	100K	5%	1/16W	1-216-837-11	METAL CHIP	22K	5%	1/16W	Changed
R571	1-216-845-11	METAL CHIP	100K	5%	1/16W	1-216-837-11	METAL CHIP	22K	5%	1/16W	Changed
R815	————					1-216-857-11	METAL CHIP	1M	5%	1/16W	Added
R817	————					1-216-821-11	METAL CHIP	1K	5%	1/16W	Added

- **CORRECTION**

MAIN (Service Manual See page 30)

	INCORRECT		CORRECT	
Ref. No.	Part No.	Description	Part No.	Description
IC801	8-759-462-34	IC MC68HC05L15SC442705CPB	8-759-462-33	IC MC68HC05L15SC442704CPB

PRINTED WIRING BOARDS

- **SEMICONDUCTOR LOCATION**

Ref. No.	Location
D101	G-17
D105	F-12
D201	H-17
D205	F-12
D302	H-17
D401	F-14
D403	E-13
D404	E-14
D407	C-14
D409	D-15
D414	F-14
D502	C-16
D801	H-18
D803	H-5
D804	F-12
D806	H-17
IC301	F-4
IC302	G-4
IC401	D-14
IC501	B-4
IC502	D-16
IC503	B-15
IC504	B-13
IC801	E-19
Q101	F-9
Q201	F-9
Q302	F-6
Q401	E-13
Q402	E-13
Q404	E-14
Q405	D-9
Q488	C-19
Q501	B-18
Q507	C-3
Q508	B-17
Q801	H-17
Q809	D-18

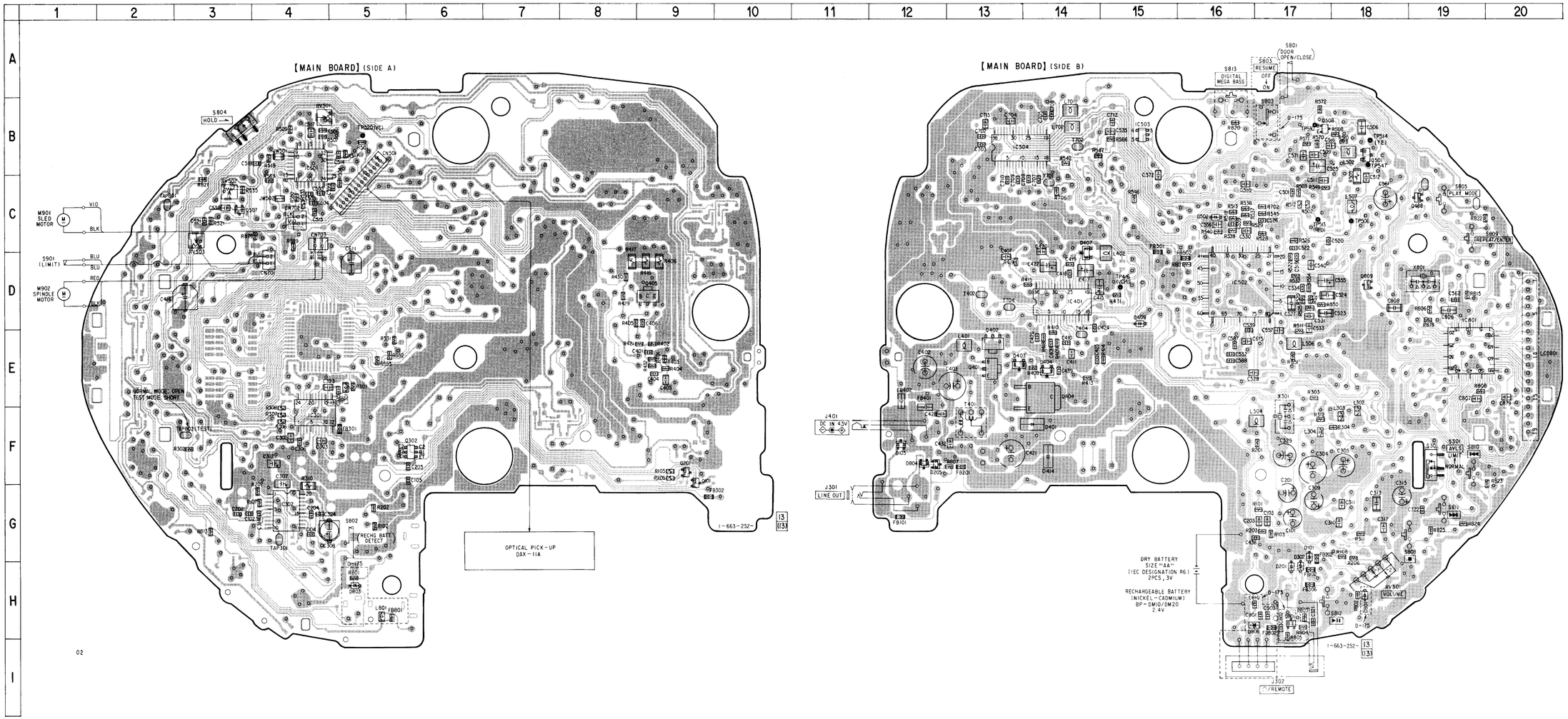

Note:

- ○— : parts extracted from the component side.
- ○ : Through hole.
- : Pattern on the side which is seen.

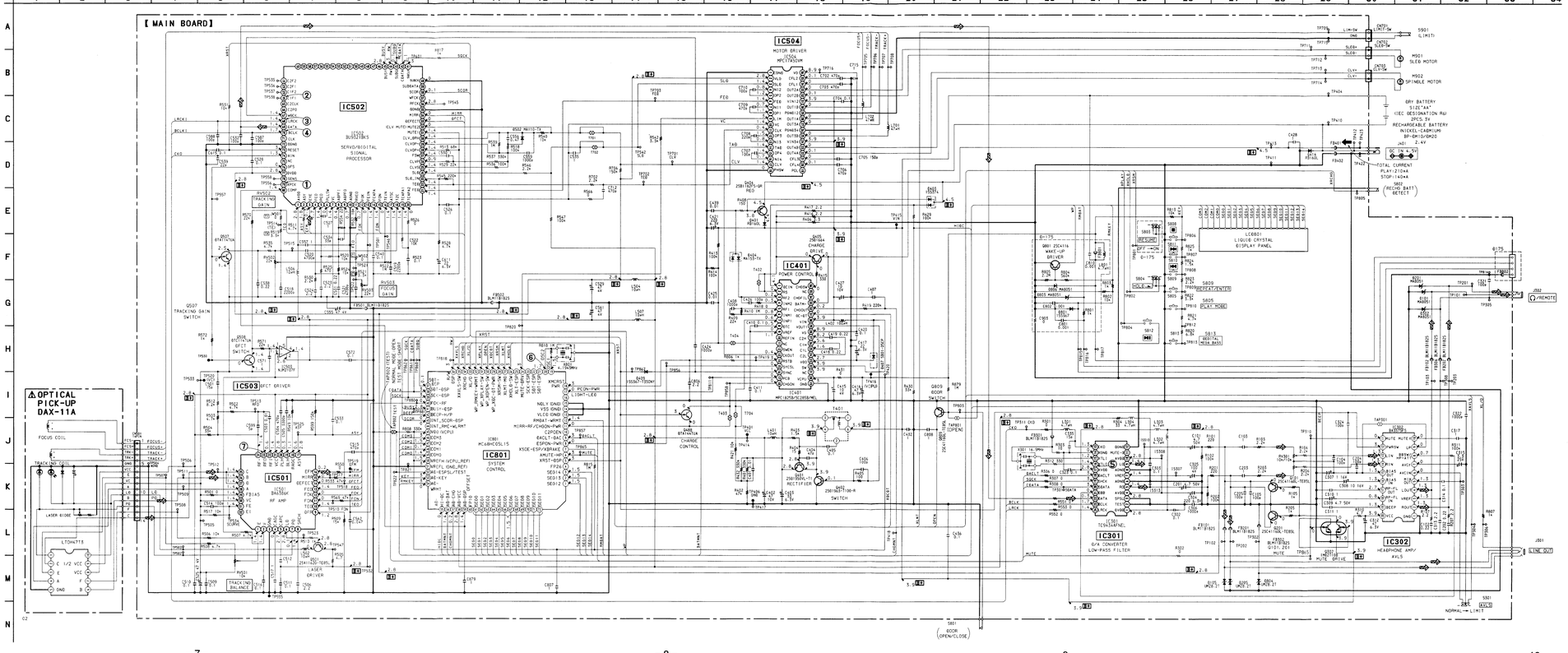

Note :

- All capacitors are in μF unless otherwise noted. pF: μμF 50WV or less are not indicated except for electrolytics and tantalums.
- All resistors are in Ω and ¼W or less unless otherwise specified.
- △ : internal component.

Note :	Note :
The components identified by mark △ or dotted line with mark △are critical for safety. Replace only with part number specified.	Les composants identifiés par une marque △sont critiques pour la sécurité. Ne les remplacer que par une pièce portant le numéro spécifié.

- B+ : B+ Line
- ▭ : adjustment for repair.
- Power voltage is dc 4.5 V and fed with regulated dc power supply from external power voltage jack (J401).
- Voltage and waveforms are dc with respect to ground under no-signal conditions.
  no mark : STOP
  ( ) : PLAY
- Voltages are taken with a VOM (Input impedance 10MΩ). Voltage variations may be noted due to normal production tolerances.
- Waveforms are taken with a oscilloscope. Voltage variations may be noted due to normal production tolerances.
- Circled numbers refer to waveforms.
- Signal path.
  ▭ : CD

● WAVEFORMS

① SERVICE MODE during TRK servo OFF

IC502 ⑯ VOLT/DIV : 1 V AC TIME/DIV : 0.1μsec

② 2.9 Vp-p, 136 μsec — IC502 ⑭ VOLT/DIV : 1 V AC TIME/DIV : 50μsec

③ 2.9 Vp-p, 22.7 μsec — IC502 ⑱ VOLT/DIV : 1 V AC TIME/DIV : 10μsec

④ 3.0 Vp-p, 0.47 μsec — IC502 ⑦ VOLT/DIV : 1 V AC TIME/DIV : 0.2μsec

⑤ 2.6 Vp-p, 16.9 MHz — IC301 ⑭ VOLT/DIV : 1 V AC TIME/DIV : 50nsec

⑥ 3.0 Vp-p, 4.196MHz — IC801 ⑳ VOLT/DIV : 1 V AC TIME/DIV : 0.2μsec

⑦ 1.0 ± 0.2 Vp-p — IC501 ㉓ VOLT/DIV : 0.2 V AC TIME/DIV : 0.5μsec