D-180K/800K

SERVICE MANUAL

US Model
Canadian Model
D-180K

AEP Model
E Model
Australian Model
D-800K

Discman

Model Name Using Similar Mechansim	D-2/20
CD Mechanism Name	KSM-162AAN

SPECIFICATIONS

CD section

System: Compact disc digital audio system

Laser diode properties: Material: GaAlAs
Wavelength: 780 nm
Emission duration: Continuous
Laser output: Less than 44.6μW
(This output is the value measured at a distance of 200 mm from the objective lens surface on the Optical Pick-up Block.)

Frequency response: 20–20,000 Hz $^{+1}_{-3}$ dB
(measured by EIAJ CP-307)

Output (at 9 V input level)
Line output (stereo minijack)
Output level 1 V rms at 47 kilohms
Load impedance over 10 kilohms
Headphones (stereo minijack)
9 mW + 9 mW at 32 ohms

General

Power requirements: DC 6 V, four size AA (LR6) alkaline batteries
DC IN 9 V jack accepts:
- Supplied AC power adaptor
- Supplied DCC-50 car battery cord for use on 12 V car battery
- Sony CPM-200P/100P mount plate (optional) for use on 12 V car battery

Power consumption: 1.2 W DC

Dimensions: Approx. 140 × 42.2 × 162 mm
($5^5/_8 \times 1^{11}/_{16} \times 6^1/_2$ in.) (w/h/d)
incl. projecting parts and controls

Weight: Approx. 480 g (1 lb. 1 oz.) net
Approx. 550 g (1 lb. 3 oz.) incl. batteries

Supplied accessories: AC power adaptor (1)
Car battery cord DCC-50 (1)
Car connecting pack CPA-2 (1)
Connecting cord (1)
Fuse (1)
Velcro tape (2)
Plug head (1)

Optional accessories: Wireless remote commander RM-DM1K
Wired remote commander RM-DM2
Car mount arm kit CPM-70
Car mount arm CPM-200A/CPM-100A
Mount plate CPM-200P/CPM-100P

CAUTION

Use of controls or adjustments or performance of procedures other than those specified herein may result in hazardous radiation exposure.

使用時は添付資料も参照のこと
Refer to the additional documents

COMPACT DISC COMPACT PLAYER

SONY®

TABLE OF CONTENTS

SECTION 1
GENERAL

Location and Function of Controls

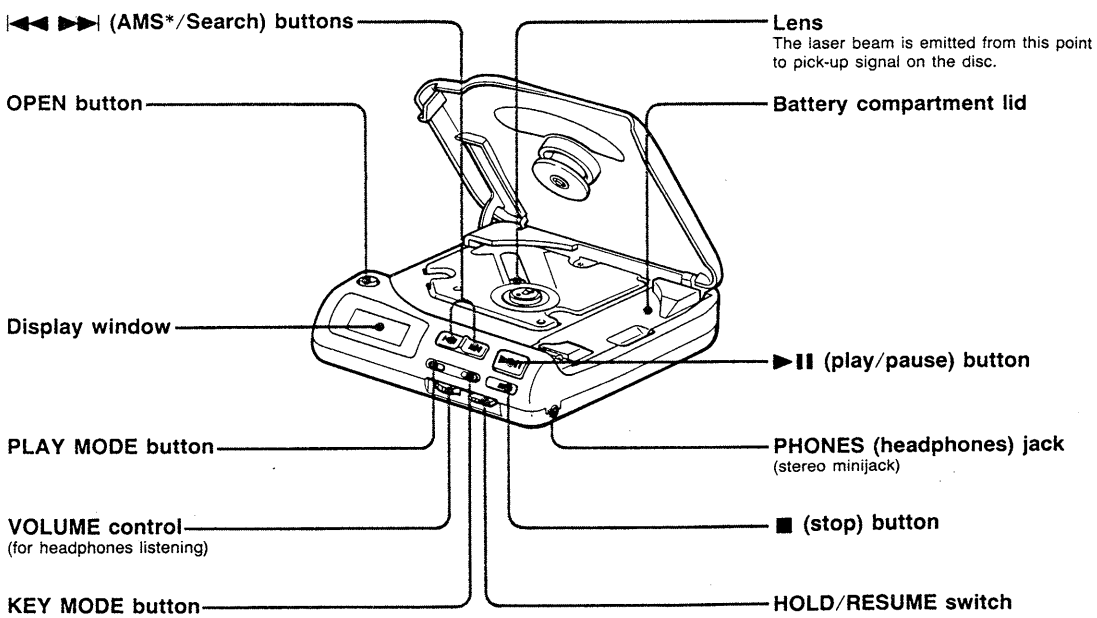

*AMS is an abbreviation for Automatic Music Sensor.

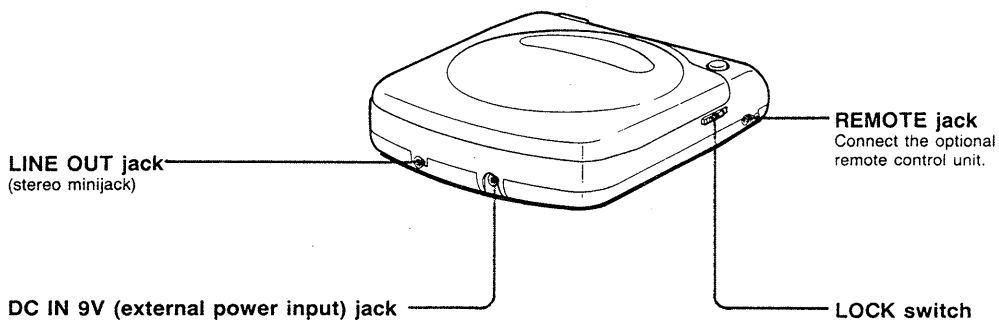

SECTION 2
SERVICING NOTES

NOTES ON HANDLING THE OPTICAL PICK-UP BLOCK OR BASE UNIT

The laser diode in the optical pick-up block may suffer electrostatic breakdown because of the potential difference generated by the charged electrostatic load, etc. on clothing and the human body.
During repair, pay attention to electrostatic breakdown and also use the procedure in the printed matter which is included in the repair parts.
The flexible board is easily damaged and should be handled with care.

Flexible Circuit Board Repairing

- Keep the temperature of the soldering iron around 270℃ during repairing.
- Do not touch the soldering iron on the same conductor of the circuit board (within 3 times).
- Be careful not to apply force on the conductor when soldering or unsoldering.

Notes on chip component replacement

- Never reuse a disconnected chip component.
- Notice that the minus side of a tantalum capacitor may be damaged by heat.

Before Replacing the Optical Block

Please be sure to check thoroughly the parameters as par the "Optical Block Checking Procedures" (Part No. : 9-960-027-11) issued separately before replacing the optical block. Note and specifications required to check are given below.

- FOK output : IC501 ⑨ pin
  When checking FOK, remove the lead wire to disc motor and unsolder and open IC801 ㉒ pin (FOK).
- S carve P-to-P value : 3Vp-p
  When checking S carve P-to-P value, remove the lead wire to disc motor.
- Adjusted part for focus gain adjustment : RV501
- RF signal P-to-P value : 0.7 – 1.25Vp-p
- Traverse signal P-to-P value : 1.5Vp-p
- The repairing grating holder is impossible.
- Adjusted part for tracking gain adjustment : RV502

To Change the Side of the Cord (car connecting pack CPA-2)

1 Remove the cord cover.

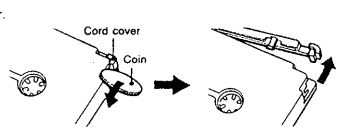

2 Change the cord to the appropriate side according to your cassette car stereo, and replace the cover again.

Cassette car stereo with a tape head at the left side

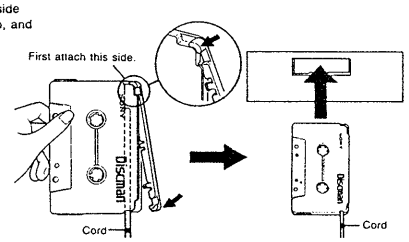

Cassette car stereo with a tape head inner

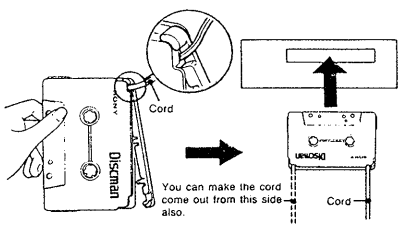

SAFETY-RELATED COMPONENT WARNING!!

COMPONENTS IDENTIFIED BY MARK ⚠ OR DOTTED LINE WITH MARK ⚠ ON THE SCHEMATIC DIAGRAMS AND IN THE PARTS LIST ARE CRITICAL TO SAFE OPERATION. REPLACE THESE COMPONENTS WITH SONY PARTS WHOSE PART NUMBERS APPEAR AS SHOWN IN THIS MANUAL OR IN SUPPLEMENTS PUBLISHED BY SONY.

ATTENTION AU COMPOSANT AYANT RAPPORT À LA SÉCURITÉ!

LES COMPOSANTS IDENTIFIÉS PAR UNE MARQUE ⚠ SUR LES DIAGRAMMES SCHÉMATIQUES ET LA LISTE DES PIÈCES SONT CRITIQUES POUR LA SÉCURITÉ DE FONCTIONNEMENT. NE REMPLACER CES COMPOSANTS QUE PAR DES PIÈCES SONY DONT LES NUMÉROS SONT DONNÉS DANS CE MANUEL OU DANS LES SUPPLÉMENTS PUBLIÉS PAR SONY.

NOTES ON LASER DIODE EMISSION CHECK

The laser beam on this model is concentrated so as to be focused on the disc reflective surface by the objective lens in the optical pick-up block. Therefore, when checking the laser diode emission, observe more than 25cm away from the objective lens.

Laser Diode Check Procedure

The laser diode on this set will not emit unless the top panel is closed and S801 (leaf SW type) is turned on. The laser diode will always emit even if focus search is not performed in service mode.
The laser diode is checked using the current value which flows to the laser diode inside the optical pick-up block.

Procedure 1 (service mode or normal operation)

Check the laser diode emission with the eye.

1. Open upper lid.
2. S801 on as Fig. 1.
   (In service mode, this operation is not necessary.)
3. Press the ▶II key.
   (In service mode, this operation is not necessary.)
4. Observe the objective lens and confirm that the laser diode is emitting light. At this time, the laser diode goes on about 10 seconds due to focus serarch. If it does not, APC circuit or optical pick-up block is defective.

Procedrue 2 (service mode or normal operation)

Check by the current with flows in the laser diode.

1. Close the top panel.
2. Remove the main board and read the current value on the label affixed to the optical pick-up block.
   (Label on optical pick-up block)

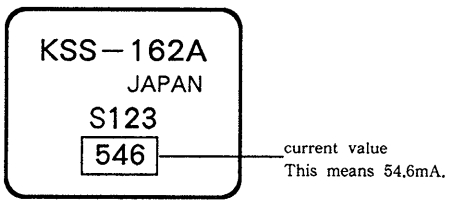

   The current value varies with the set.
3. Connect a VOM as shown in Fig. 2.
4. Press the ▶II key.
5. Calculate the current by the VOM reading.
   VOM reading (V) ÷10=current (A)
   ex. VOM reading=0.56V
   0.56÷10=0.056 (A) =56 (mA)
6. Confirm that the ammeter reading is within the range given below.
   value on label$^{+5}_{-1}$ mA (25℃)
   variation relative to temperature : 0.4mA/℃
   (Current increases when temperature rises and decreases when it drops.)

If the value is more than the range give, APC circuit has been defective or the laser diode has deteriorated. If it is less, APC circuit or optical pick-up block is defective.

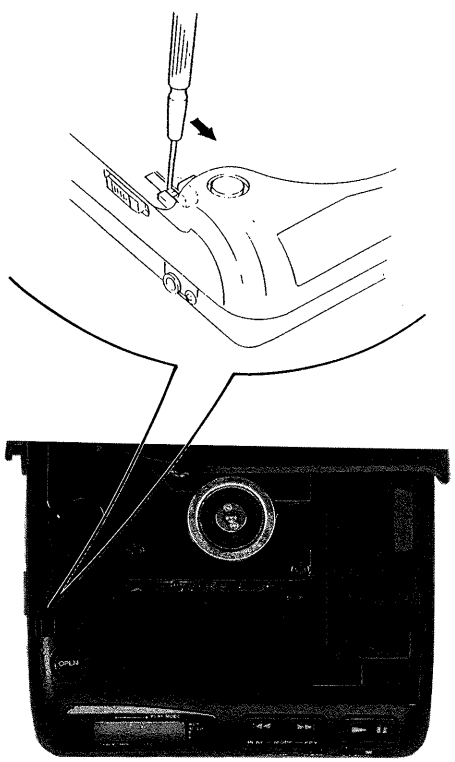

Fig.1 Turning S801 on

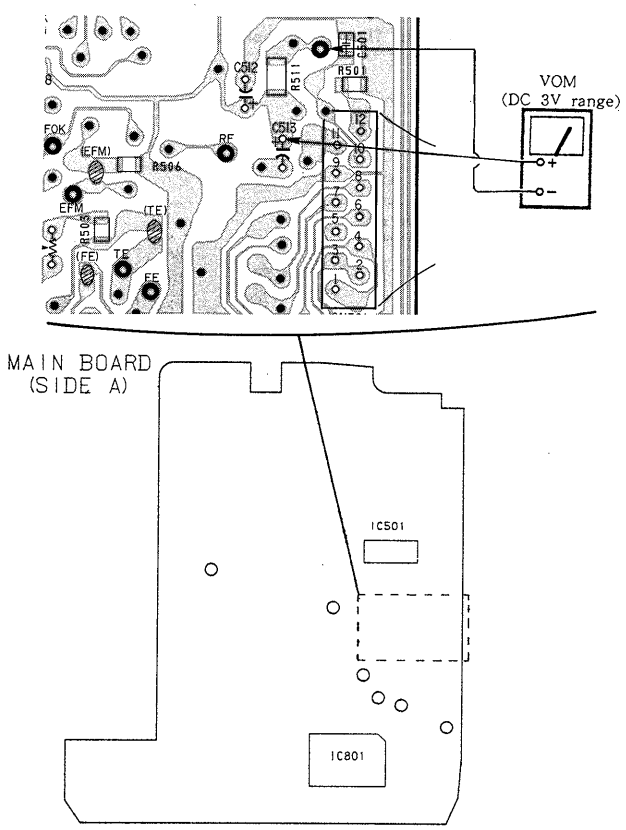

Fig.2 VOM Connection

SERVICE MODE (service program)

This set has built-in service program in the microcomputer as usual sets.
The operation method of service program is explained below.

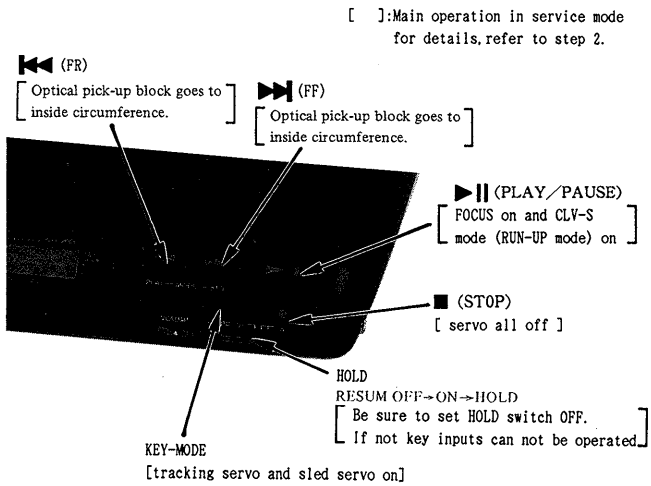

Fig.3 Key Positions

• Step 1 (Service Mode setting method)

1. Turn the HOLD switch OFF with the external power supply not plugged in (no power applied to set) and press the ▶II key.
2. Solder jumper TEST terminal.
   (IC801 pin㉔(TEST) is grounded.)
3. Plug in external power supply.
   This puts the set into service mode.

• Step 2 (Service Mode operation)

1. When service mode is set, the display will change 6 times, and those 6 changes will be repeated over and over.
   With this the LCD display should be present in service mode. Even if LCD dose not display, other operations will be performed.
2. When ⏭ or ⏮ key is pressed, the optical pick-up block moves to the inside or outside circumference. Tracking servo and sled servo go off when this is done, so press KEY-MODE to turn on the tracking servo if necessory.
3. When ▶II key is pressed, CLV-S (pull-in mode) starts while performing focus search. When there is no disc installed, focus search is repeated several times while disc motor is rotating.
4. When KEY-MODE is pressed, tracking servo, sled servo and CLV-A (servo during PLAY) go ON.
5. When 3 and 4 are performed, the disc begins to play. At this time, the top panel should be closed and S801 is to be ON. A sound is not produced as muting is ON.
6. All servo (focus, tracking, sled and spindle) go off when ■ key is pressed.

• Step 3 (Service Mode release)

1. First be sure to unplug the external power supply, then remove the solder jumper TEST terminal.
2. The set will now operated normally.

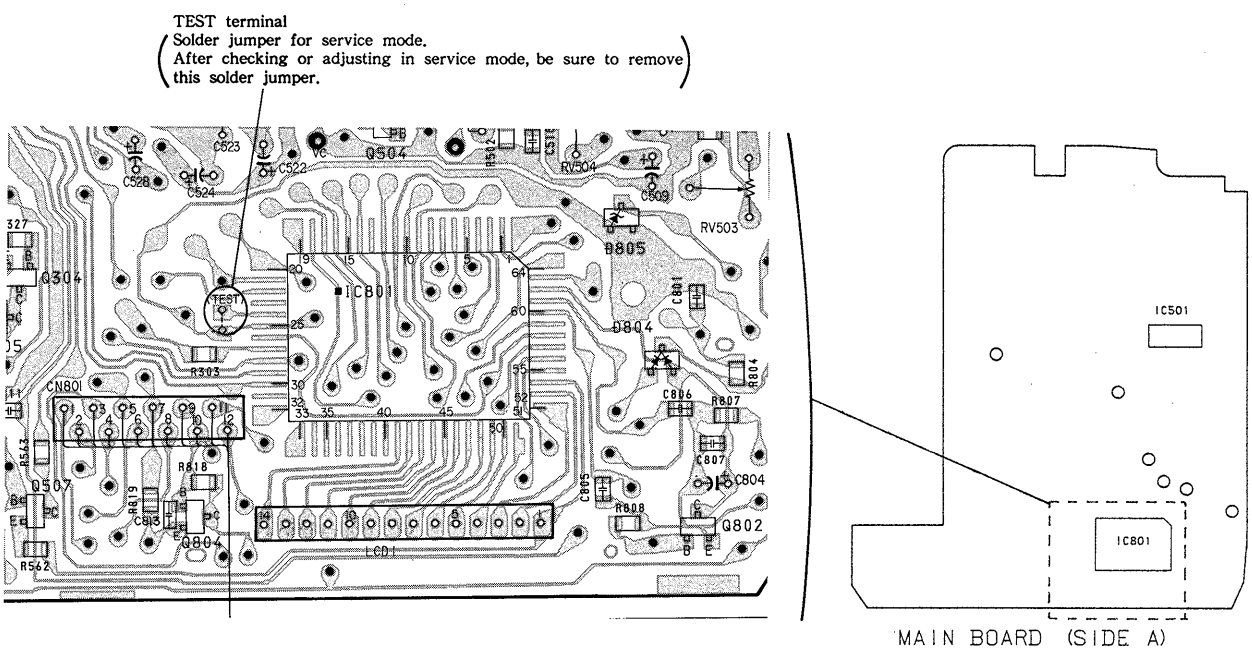

Fig.4 TEST terminal position

SECTION 3
ELECTRICAL ADJUSTMENTS

Notes on Adjustment

1. Perform adjustments in service mode.
   Be sure to release service mode after completing adjustments.
   (Refer to "Service Mode (service program)" on page 5.)
2. Perform adjustments in the order given.
3. Use YEDS-18 disc (part No. : 3-702-101-01) unless otherwise indicated.
4. Power supply voltage : DC 9V
   HOLD switch : OFF

PREPARATION

Put the set into service mode (See page 5.) and perform the following checks. Repair if there are any abnormalities.

• Sled Motor Check

1. Press the OPEN button and open the top panel.
2. Press the ⏭, ⏮ keys and make sure that the opticl pick-up block moves smoothly, without catching, from the inmost → outmost → inmost circumference.
   ⏭ : opticl pick-up block moves outward
   ⏮ : opticl pick-up block moves inward

• Focus Search Check

1. Press the OPEN button and open the top panel.
2. Press the ▶II key. (Focus search is performed continuously.)
3. Observe the opticl pick-up block objective lens and check that it moves smoothly up and down with no catching or noises.
4. Press the ■ key.
   Check that focus search operation stops. If it does not, press the ■ key again.

VC (1/2 Vcc) Connecting Point

FOCUS BIAS ADJUSTMENT
TRACKING BALANCE ADJUSTMENT

When the adjustments above are performed, connect the ⊖ side of oscilloscope to the point below.

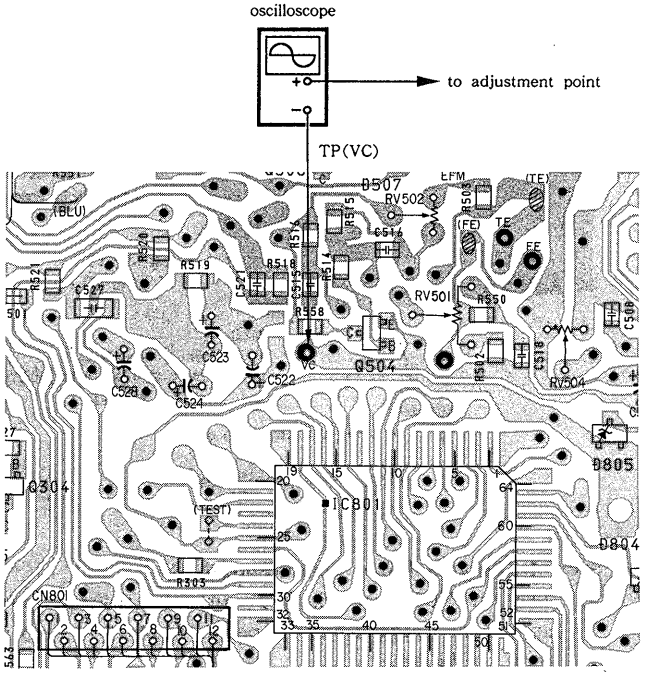

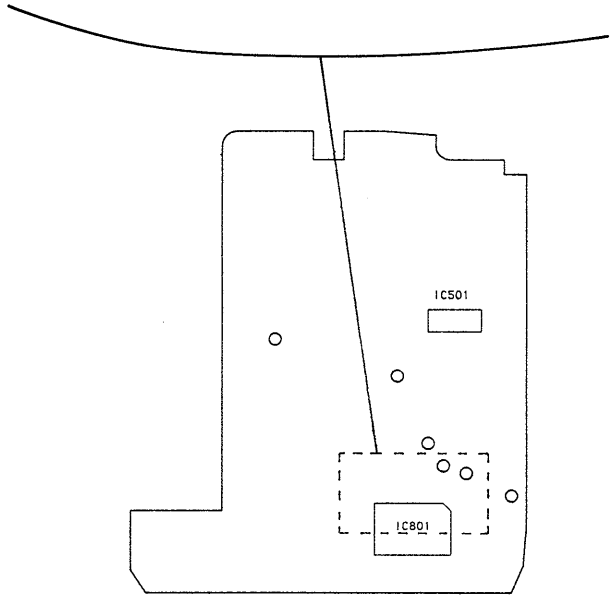

MAIN BOARD (SIDE A)

VC connecting point

5.3V Adjustment

Adjustment Procedure :

1. Put the set into service mode (see page 5).
2. Connect the VOM to main board test point TP(+5.3V).
3. Adjust RV401 for 5.2V−5.3V reading on the VOM.
4. After adjustment, release service mode (see page 5).

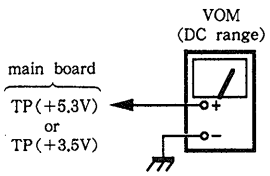

3.5V Adjustment

Adjustment Procedure :

1. Put the set into service mode (see page 5).
2. Connect the VOM to main board test point TP (+3.5V).
3. Adjust the pattern connection (Ⓐ or Ⓑ) to obtain 3.45V to 3.6V reading on the VOM.

pattern connection		VOM reading
A	B	
○	×	down ↑
×	×	
×	○	↓
○	○	up

○: short × : open

Adjustment Location : main board

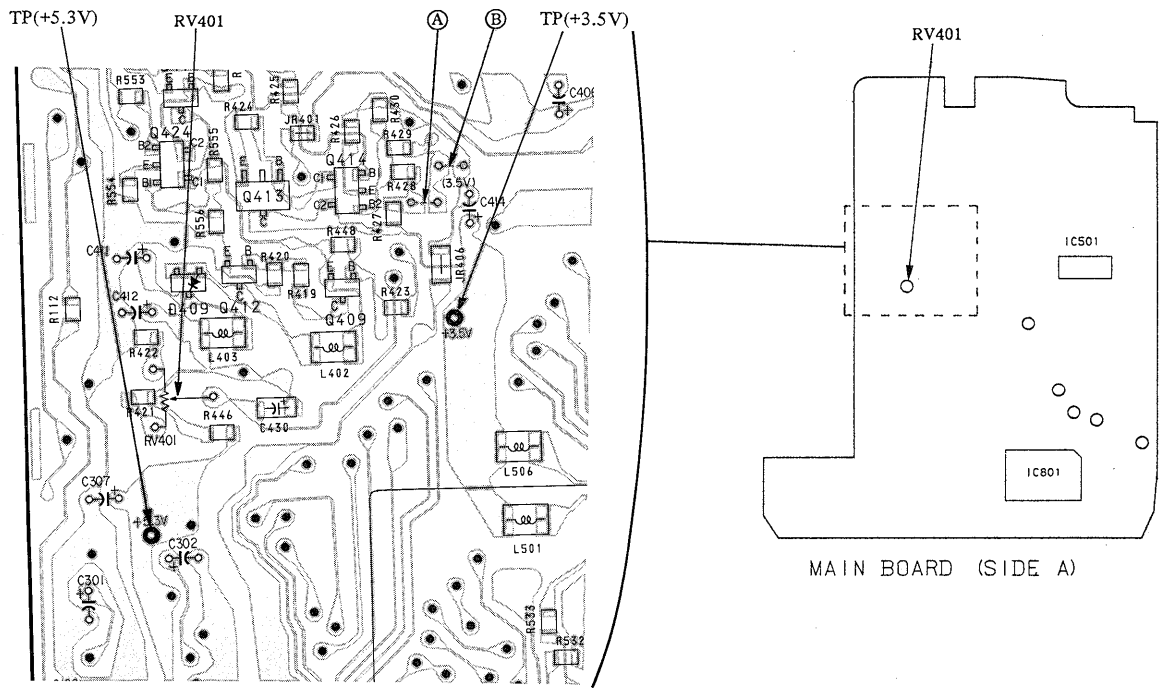

PLL Free Run Frequency Check and Adjustment

Check/Adjustment Procedure :

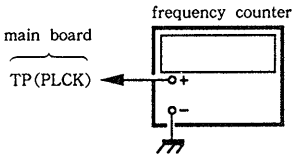

1. Disconnect EFM solder jumper terminal in the diagram below.
2. Connect a frequency counter to main board test point TP(PLCK).
3. Put the set into service mode (See page 5).
4. Check that the frequency counter reading is 4.31±0.01 MHz. If not, adjust RV505 so that it is 4.31±0.01MHz.
5. After adjustment, release service mode (see page 5).
6. Short the jumper terminal disconnected in step 1.

Check/Adjustment Location : main board

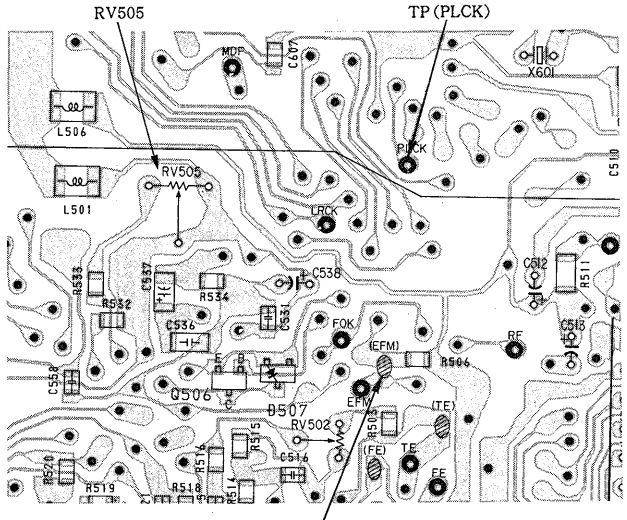

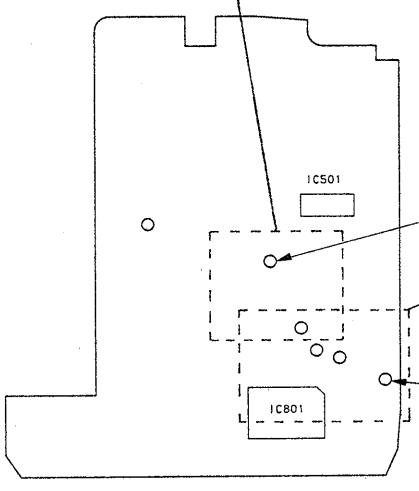

MAIN BOARD (SIDE A)

Tracking Balance Adjustment

Conditions :

The set should be placed either horizontally.

Adjustment Procedure :

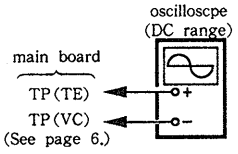

1. Connect the oscilloscope to main board TP(TE).
2. Put the set into service mode (See page 5.)
3. Press the ⏭ and ⏮ keys to move the opticl pick-up block to the center.
4. Insert the disc (YEDS-18) and close the top panel.
5. Press the ⏯ key.
   (It will go from focus search to focus on, and CLV pull-in mode state. Tracking and sled are OFF.)
6. Adjust RV503 so that the oscilloscope wavaform is symmetrical on the top and bottom in relation to 0V.

Note : Take sweep time as long as possible to obtain best waveform.

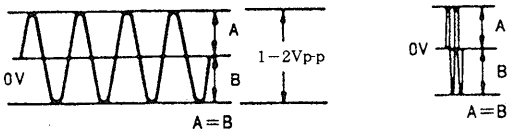

7. Press the ■ key.
8. After adjustment, release service mode (see page 5).

Adjustment Location : main board

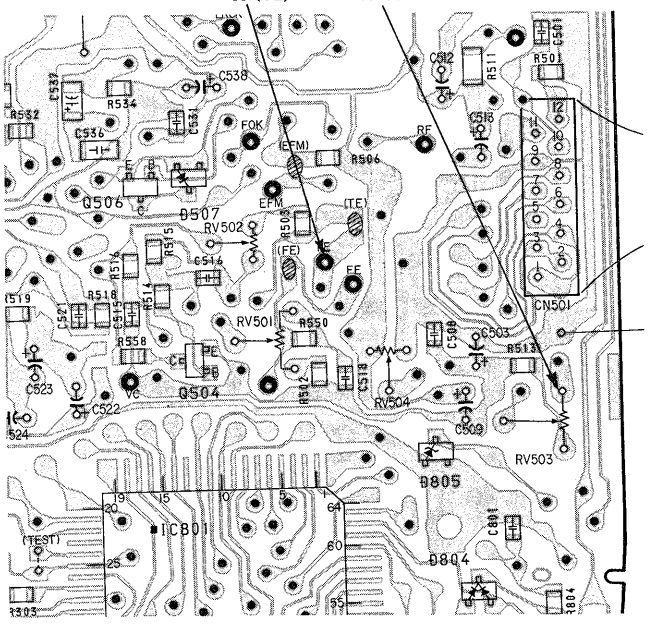

Focus Bias Adjustment

Conditions :

The set should be placed either horizontally.

Adjustment Procedure :

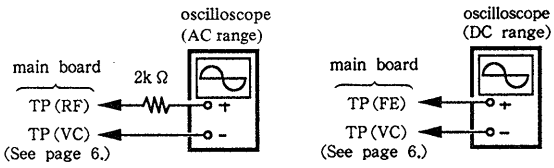

1. Put the set into service mode (See page 5).
2. Connect the oscilloscope to main board test point TP(RF).
3. Press the ⏭ and ⏮ key to move the optical pick-up block to the center.(Move the optical pick-up block to the music area on the disc to enable easy visibility of the eye pattern).
4. Insert the disc (YEDS-18) and close the top panel.
5. Press the ⏯ key.
   (It will go from focus search to focus on, and CLV pull-in mode state.Tracking and sled are OFF.)
6. Press the KEY-MODE button (Tracking and sled go ON.)
7. Adjust RV504 so that the oscilloscope waveform eye pattern is good. A good eye pattern means that the diamond shape (◇) in the center of the waveform can be clearly distinguished.

• RF Signal Reference Waveform (eye pattern)

VOLT/DIV : 200mV

TIME/DIV : 500nS

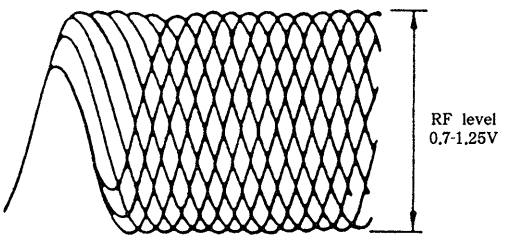

When observing the eye pattern, set the oscilloscope for AC range and raise vertical sensitivity.

8. Press the ■ key.
9. Remove the disc and connect the oscilloscope to main board TP (FE).
10. Adjust RV504 again refering to the table following.

voltage of TP (FE)	adjustment
more than +100mV	Not adjust again.
+50 to 100mV	Adjust RV504 again for +100mV reading on oscilloscpe
less than +50mV	Not adjust again.

11. After adjustment, release service mode (see page 6).

Adjustment Location : main board

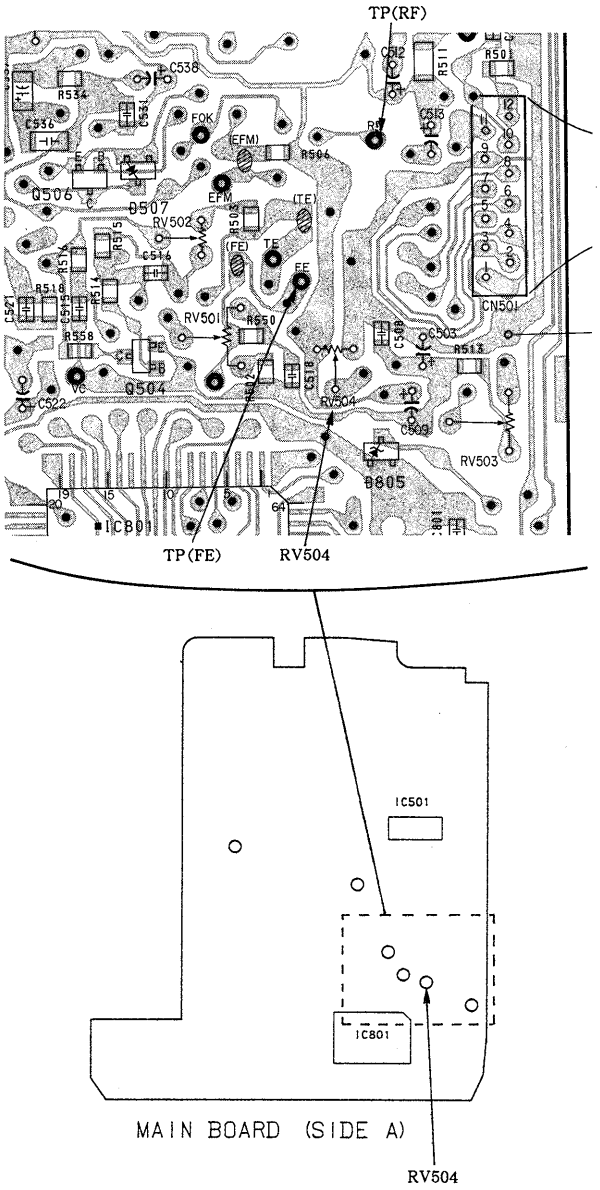

Reference

Focus/Tracking Gain Adjustment

A frequency responce analyzer or CD jig is necessary in order to perform this adjustment exactly.

> However, this gain has a margin, so even if it is slightly off, there is no problem. Therefore, do not perfrom this adjustment.

Focus/tracking gain determines the pick-up followup (vertical and horizontal) relative to mechanical noise and mechanical shock when the 2-axis device operate.
However, as these reciprocate, the adjustment is at the point where both are satisfied.

- When gain is high, the noise when the 2-axis device operates increases.
- When gain is low, it is more susceptible to mechanical shock and skipping occurs more easily.

This adjustment is to be performed when replacing the following parts :

- UPF (optical pick-up block)
- RV501 (focus gain volume)
- RV502 (tracking gain volume)

> On this set, it is very difficult to simplify this adjustment. For those sets on which symptoms such as "occasional skipping" are hard to discover, or it is hard to tell if the set has been repaired, use the CD jig and perform this adjustment. Refer to the diagram below for connection of the CD jig. The adjustment procedure is described in the separate CD jig Instruction Manual.

Please be careful not to move RV501 (focus gain volume), RV502 (tracking gain volume) ordinarily.

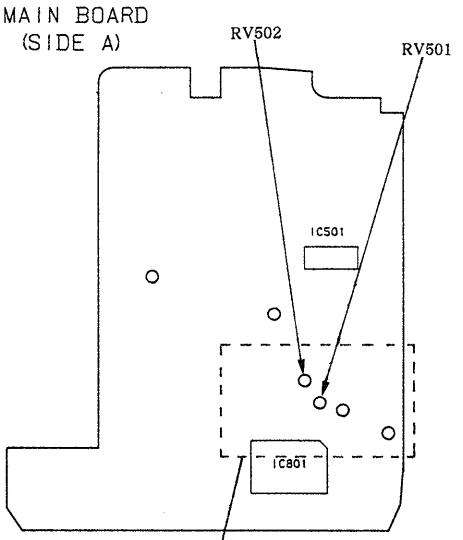

CD jig connection :

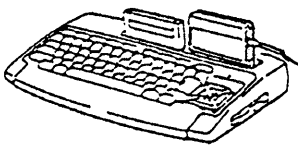

CD jig

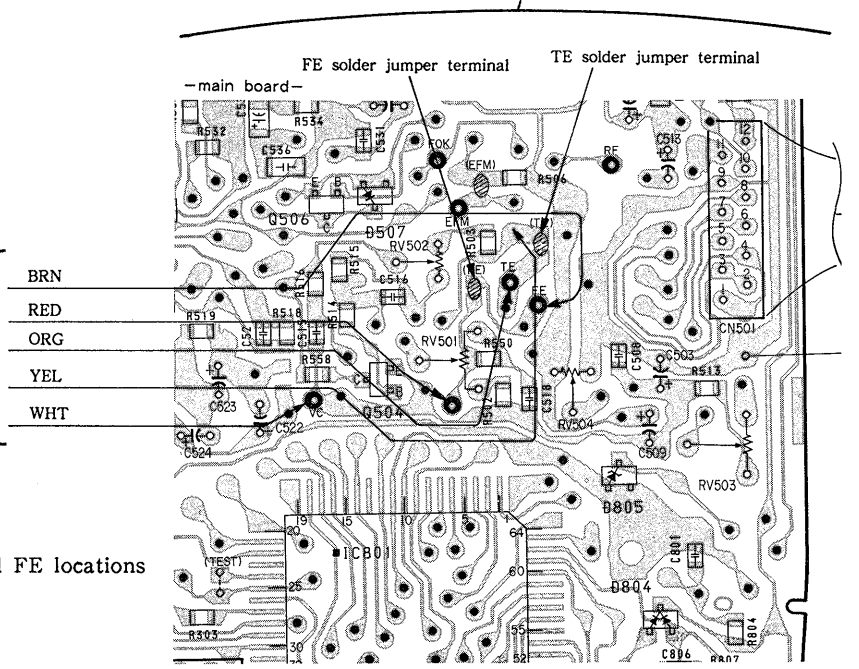

Remove the solder jumpers at the TE and FE locations and connect the CD jig.

SECTION 4 DIAGRAMS

4-1. SEMICONDUCTOR LEAD LAYOUTS

IMD3

IMN10

SLP-681C

● **Semiconductor Locations**

Ref. No.	Location	Ref. No.	Location
D401	B-14	IC505	B-4
D402	C-14	IC601	E-3
D409	D-12	IC602	D-16
D418	I-7	IC801	H-15
D501	C-3	IC802	H-4
D502	B-3		
D503	B-3	Q302	J-6
D504	B-2	Q303	I-7
D505	F-4	Q304	H-13
D507	G-15	Q305	I-13
D601	E-15	Q409	D-13
D801	H-3	Q410	C-12
D803	I-2	Q412	D-13
D804	I-16	Q413	D-13
D805	H-16	Q414	D-13
D806	I-4	Q423	E-6
D807	I-2	Q424	D-12
D901	I-25	Q451	D-6
D902	I-23	Q453	C-13
D903	I-22	Q501	F-2
D904	I-25	Q502	F-2
D905	I-24	Q503	H-3
D906	I-23	Q504	H-15
D907	I-22	Q506	G-15
		Q507	I-13
IC301	F-6	Q801	I-2
IC302	H-6	Q802	J-17
IC303	G-6	Q803	I-13
IC501	G-2	Q804	J-14
IC502	G-4	Q901	B-14
IC503	E-2	Q902	B-13
IC504	C-3		

Note on Printed Wiring Boards:

- ○——: parts extracted from the component side.
- ■ : parts mounted on the conductor side.
- ● : Through hole.
- ▒ : Pattern on the side which is seen.
- ▒ : Pattern of the rear side.

4-2. PRINTED WIRING BOARDS

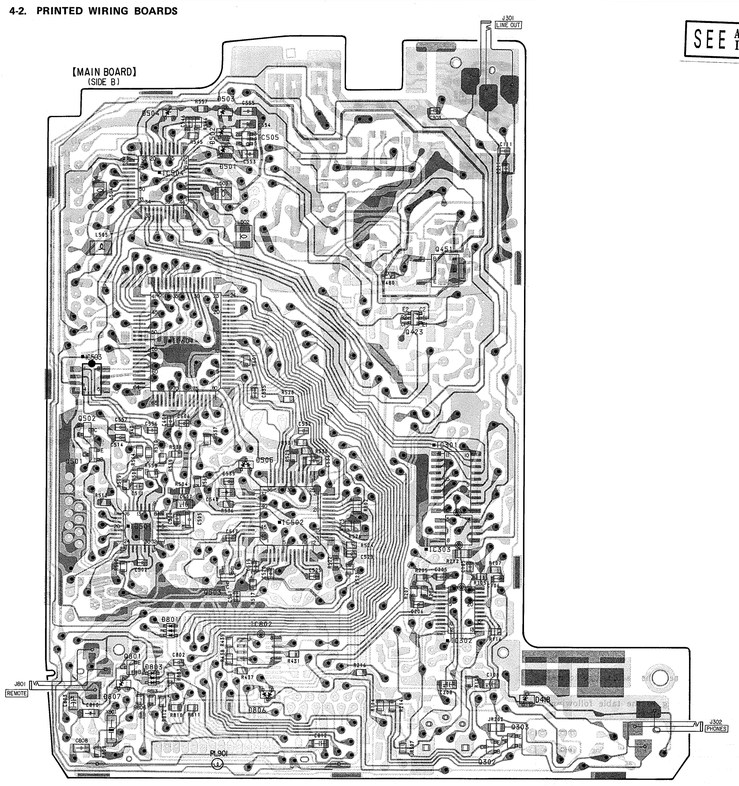

SEE ADDITIONAL INFORMATION

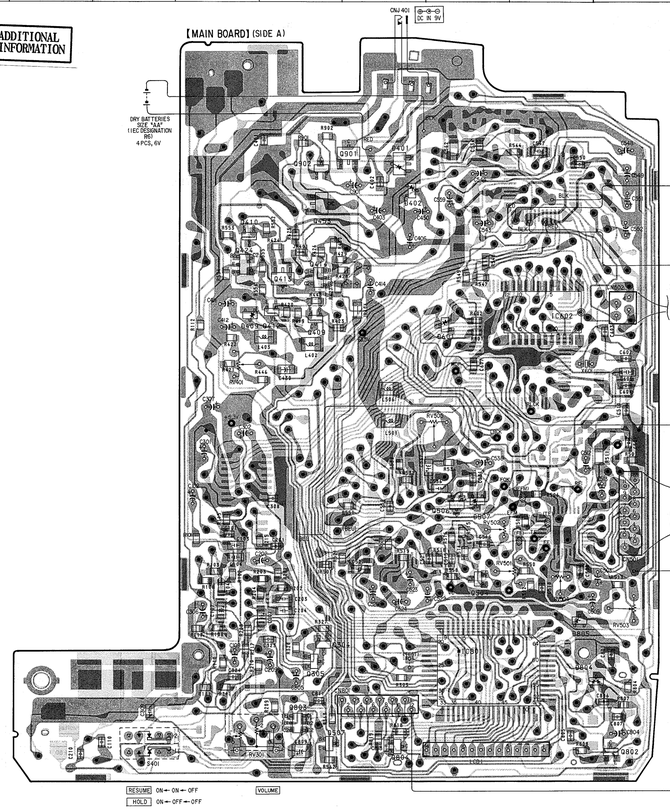

SEE ADDITIONAL INFORMATION

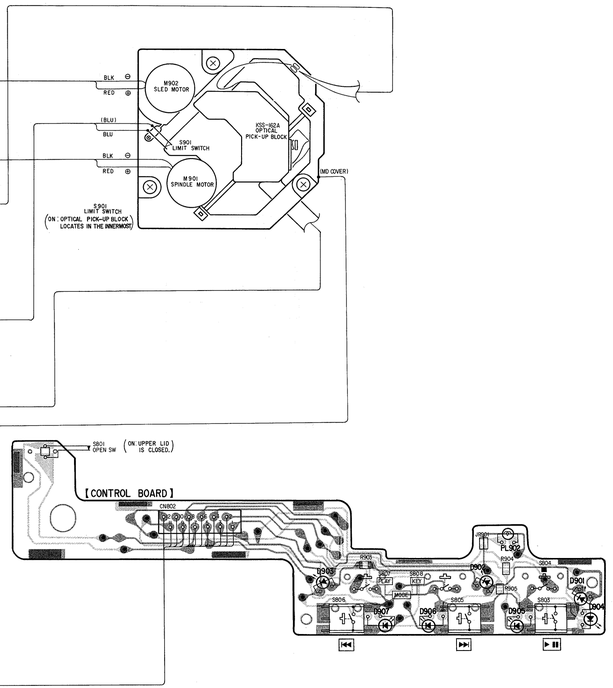

SEE ADDITIONAL INFORMATION

4-3. SCHEMATIC DIAGRAM

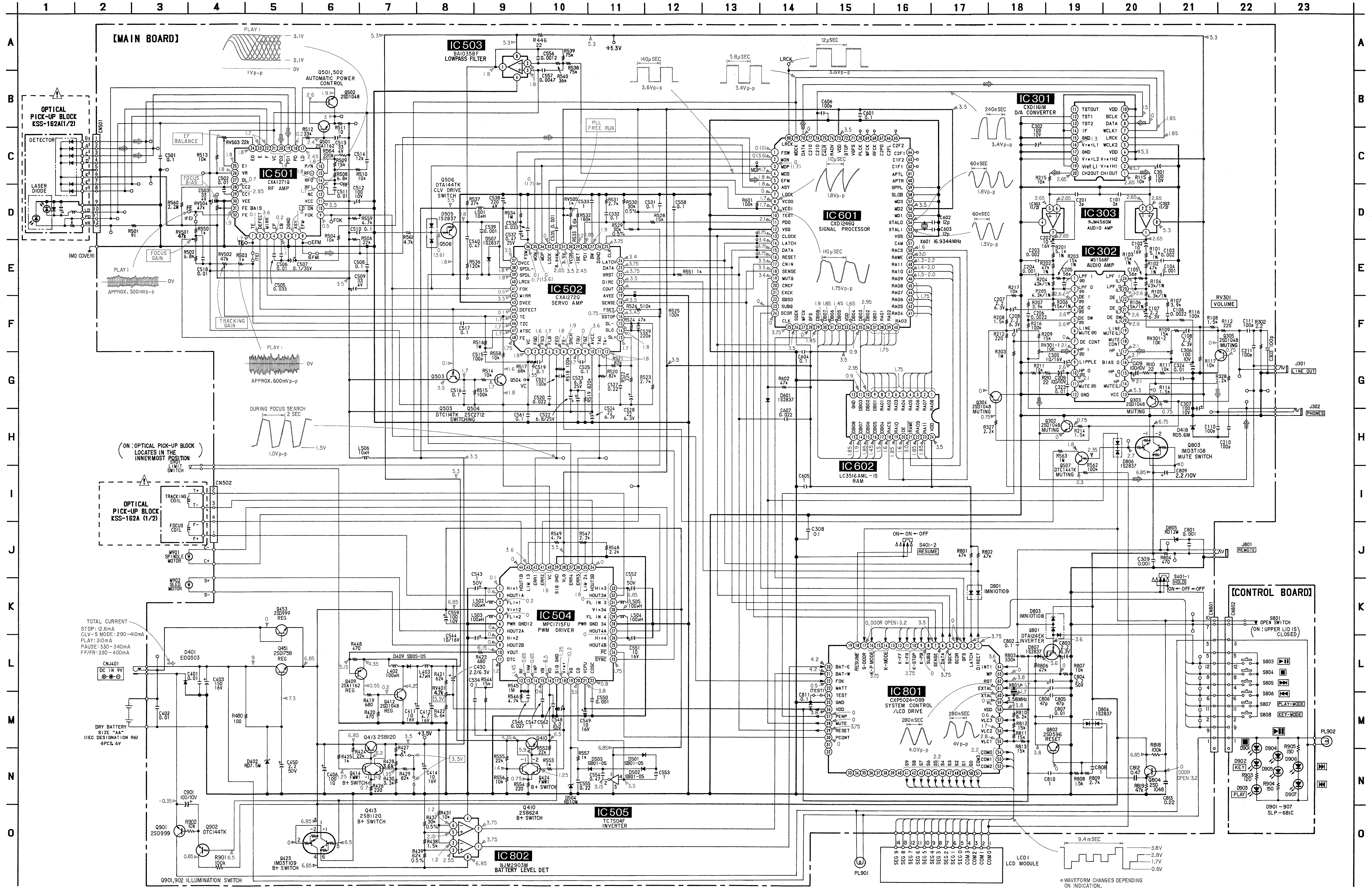

Note on Schematic Diagram:

- All capacitors are in μF unless otherwise noted. pF: μμF 50WV or less are not indicated except for electrolytics and tantalums.
- All resistors are in Ω and 1/4W or less unless otherwise specified.
- % : indicates tolerance.

Note:	Note:
The components identified by mark ⚠ or dotted line with mark ⚠ are critical for safety. Replace only with part number specified.	Les composants identifiés par une marque ⚠ sont critiques pour la sécurité. Ne les remplacer que par une pièce portant le numéro spécifié.

- ▬ : B+ Line
- ☐ : adjustment for repair.
- Power voltage is dc 9V and fed with regulated dc power supply from external power voltage jack.
- Voltage and waveforms are dc with respect to ground in service mode. (See page 5 for set up of service mode.)
  no mark : STOP Conditions
  ( ) : PLAY Conditions
- Voltages are taken with a VOM. (Input inpedance 10MΩ) Voltage variations may be noted due to normal production tolerances.
- Waveforms are taken with a oscilloscope. Voltage variations may be noted due to normal production tolerances.
- Signal path.
  ⇨ : CD

LCD MODULE

COMMON

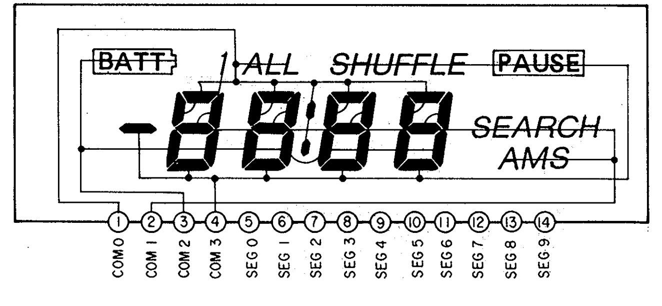

SEGMENT

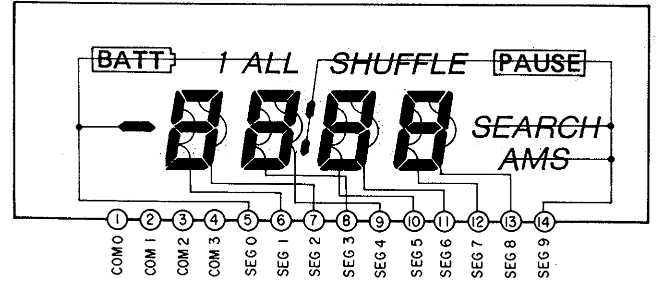

4-4. IC BLOCK DIAGRAM

IC301
CXD1161M-3

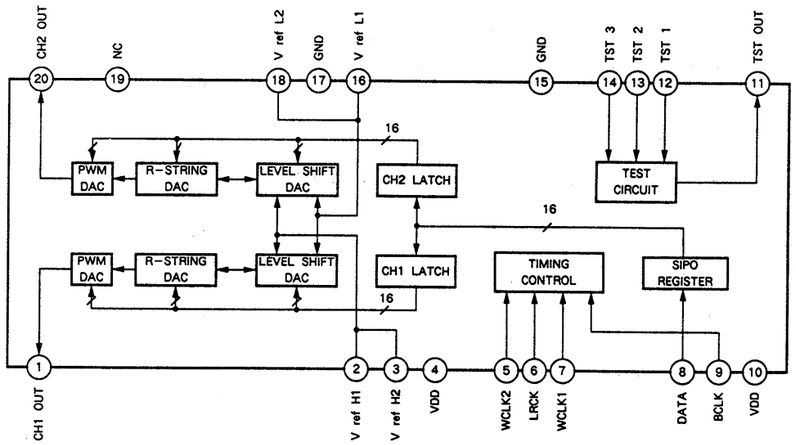

IC302
M51568FP

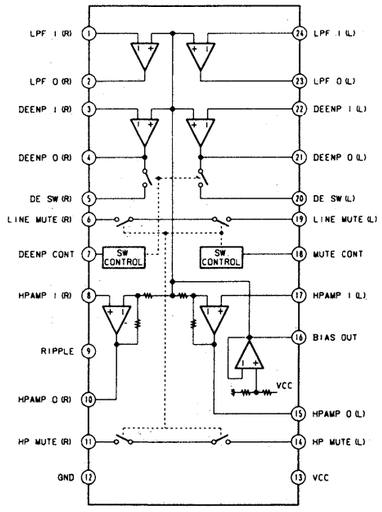

IC501
CXA1271Q

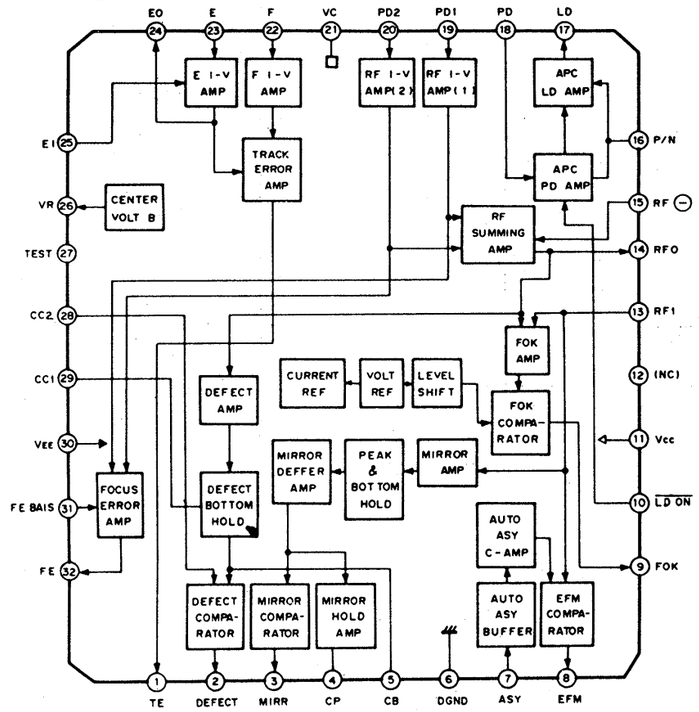

IC502
CXA1272Q-Z

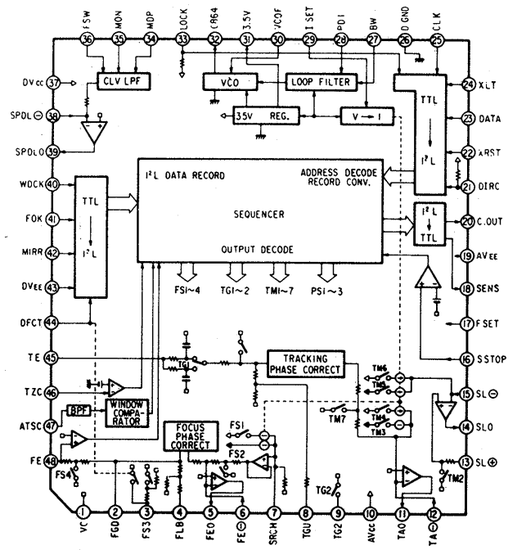

IC504
MPC1715FU

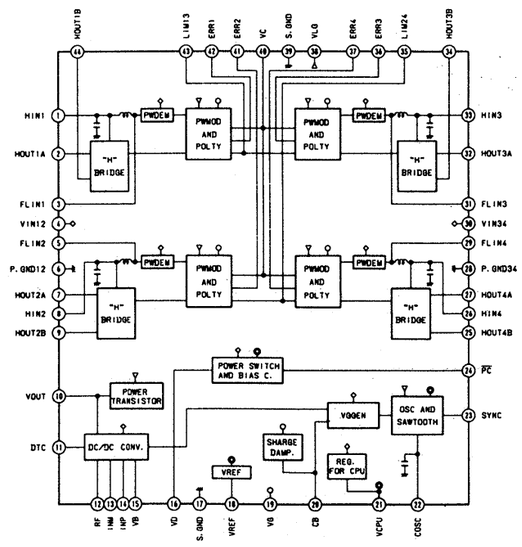

IC601
CXD1130Q

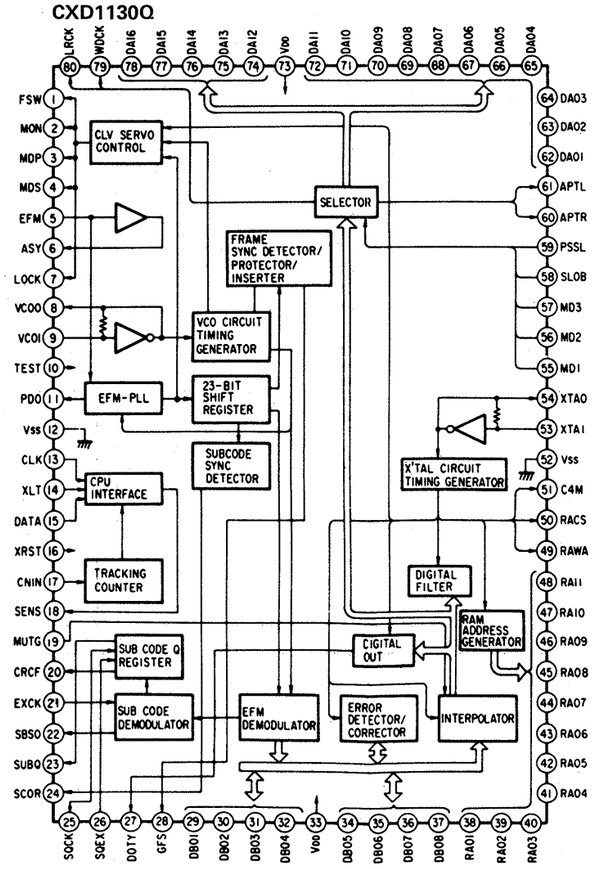

SECTION 5
EXPLODED VIEWS

NOTE:

- The mechanical parts with no reference number in the exploded views are not supplied.
- The construction parts of an assembled part are indicated with a collation number in the remark column.
- Items marked "★" are not stocked since they are seldom required for routine service. Some delay should be anticipated when ordering these items.
- Due to standardization, parts with part number suffix -XX and -X may be different from the parts specified in the components used on the set.
- Color Indication of Appearance Parts Example:
  (RED) . . . KNOB, BALANCE (WHITE)
  ↑ Cabinet's Color ↑ Parts' Color

The components identified by mark ⚠ or dotted line with mark ⚠ are critical for safety.
Replace only with part number specified.

Les composants identifiés par une marque ⚠ sont critiques pour la sécurité.
Ne les remplacer que par une pièce portant le numéro spécifé.

1. GENERAL SECTION (1)

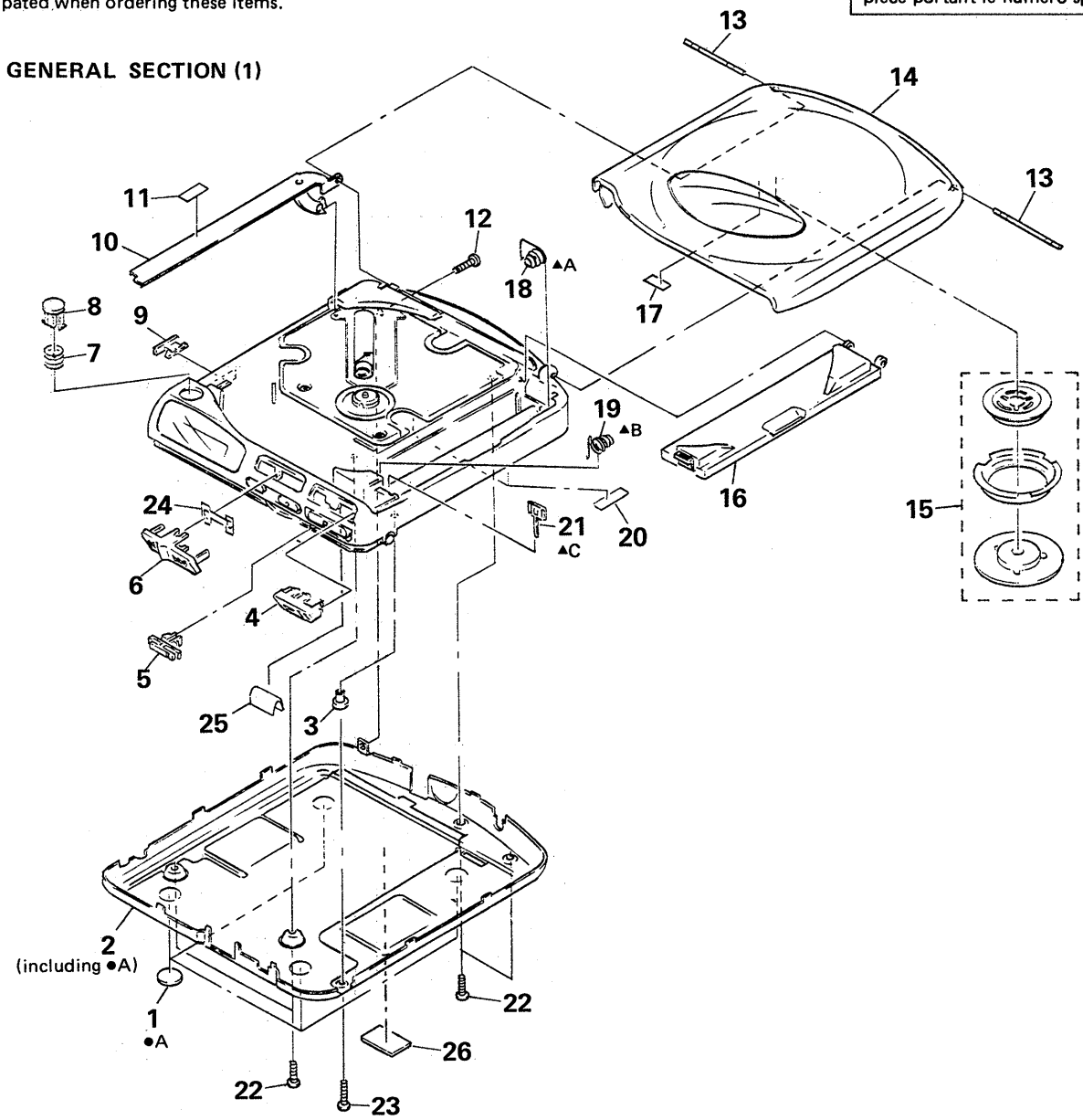

Ref.No	Part No.	Description	Remark
1	4-912-641-01	FOOT, RUBBER	
2	X-4913-233-1	PLATE ASSY, BOTTOM	
3	*4-916-252-01	SPACER (PC BOARD)	
4	4-916-227-01	BUTTON (PLAY)	
5	4-924-724-01	KNOB (HOLD)	
6	4-916-226-01	BUTTON (AMS)	
7	4-917-727-01	SPRING, COMPRESSION	
8	4-924-130-01	BUTTON, OPEN	
9	4-916-225-01	KNOB (SAFETY)	
10	4-916-224-01	ARM, SWITCHING	
11	3-884-241-01	SHEET (C), ADHESIVE	
12	3-703-816-82	SCREW (M1.4X6.0), SPECIAL HEAD	
13	4-916-204-02	SHAFT, FULCRUM	
14	X-4913-234-1	LID ASSY, UPPER	
15	A-3039-967-A	PLATE ASSY, CHUCK	
16	4-926-619-01	LID, BATTERY CASE	
17	3-682-518-00	CUSHION	
18	2-298-630-11	SPRING (R)	
19	4-926-627-01	SPRING (A)	
20	*4-926-115-01	CUSHION (P)	
21	3-881-922-11	BOARD, TERMINAL	
22	4-908-792-71	SCREW (B2X6), TAPPING, P1	
23	2-370-905-00	SCREW (B) (2X8), TAPPING	
24	*4-916-263-01	SHEET (FR)	
25	*4-916-262-01	SHEET (PLAY)	
26	4-916-211-01	(AEP, E, Australian)....LABEL, MODEL NUMBER	
26	4-916-220-01	(US, Canadian)....LABEL, MODEL NUMBER	

2. GENERAL SECTION (2)

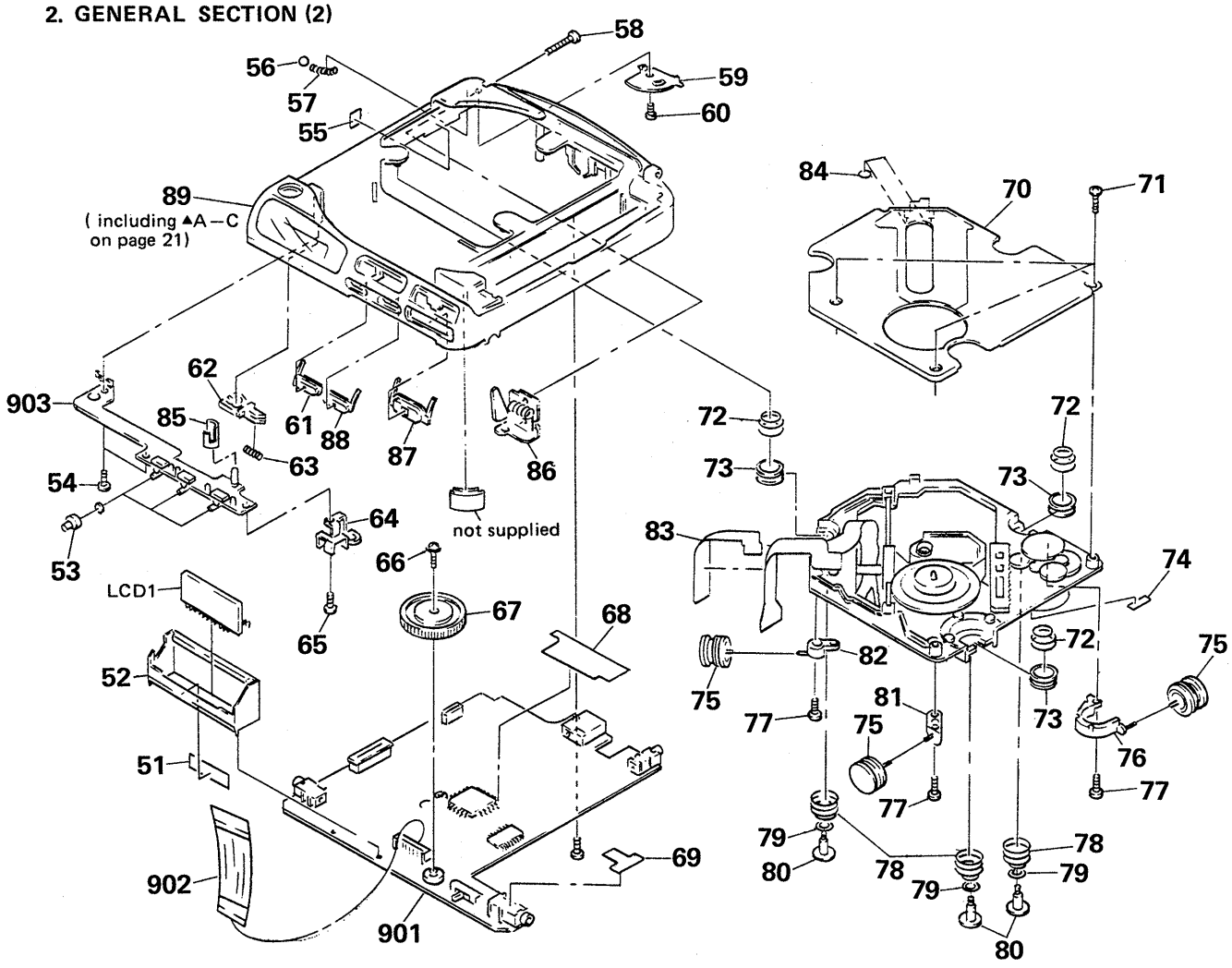

Ref.No	Part No.	Description	Remark
51	*4-926-115-01	CUSHION (P)	
52	4-916-234-01	HOLDER, LCD	
53	4-916-259-01	CAP	
54	4-908-792-71	SCREW (B2X6), TAPPING, P1	
55	*4-926-660-01	SPACER (K)	
56	7-671-155-01	STEEL BALL 3.0	
57	4-926-633-01	SPRING (BALL), COMPRESSION	
58	3-703-816-82	SCREW (M1.4X6.0), SPECIAL HEAD	
59	4-926-612-01	RETAINER, BALL	
60	4-908-792-01	SCREW (B2X3), TAPPING, P1	
61	4-916-228-01	BUTTON (MP)	
62	4-916-231-01	CLAW, LID LOCK	
63	4-924-140-01	SPRING, COMPRESSION	
64	X-4913-209-1	REINFORCEMENT ASSY	
65	4-908-792-81	SCREW (B2X11), TAPPING, P1	
66	3-335-797-21	SCREW (M1.4X3), TOOTHED LOCK	
67	4-924-732-11	KNOB (VOLUME)	
68	*4-916-265-01	SHEET, BLIND	
69	*4-916-256-01	SHEET, INSULATING, JACK	
70	4-924-735-01	COVER, MD	
71	3-893-942-01	SCREW (1.7X4), TAPPING (B)	
72	4-916-214-01	SPRING (B1)	
73	4-916-218-01	HOLDER, SPRING	
74	*3-561-902-11	CLOTH, RETAINING, CASSETTE	
75	3-330-929-01	DAMPER (2), HYPER	
76	4-916-217-01	BAR (C), DAMPER	
77	3-318-203-71	SCREW (B1.7X5), TAPPING	
78	4-916-215-01	SPRING (A1)	
79	*4-916-785-11	SPACER	
80	4-924-718-01	SCREW, INSULATOR	
81	4-916-210-01	BAR (A), DAMPER	
82	4-916-209-01	BAR (B), DAMPER	
83	4-924-761-01	PAPER (A), SHIELD	
84	4-917-784-01	SPACER (S)	
85	4-916-250-01	HOLDER (LAMP)	
86	X-4913-235-1	SPRING ASSY	
87	4-916-222-01	BUTTON (STOP)	
88	4-916-221-01	BUTTON (MK)	
89	X-4913-236-1	CABINET ASSY	
901	A-3015-819-A	PC BOARD ASSY, MAIN	
902	1-558-894-11	WIRE, FLAT TYPE (20 CORE)	
903	*1-631-122-11	PC BOARD, CONTROL	
LCD1	1-808-793-11	DISPLAY PANEL, LIQUID CRYSTAL	

3. MECHANISM SECTION (KSM-162AAN)

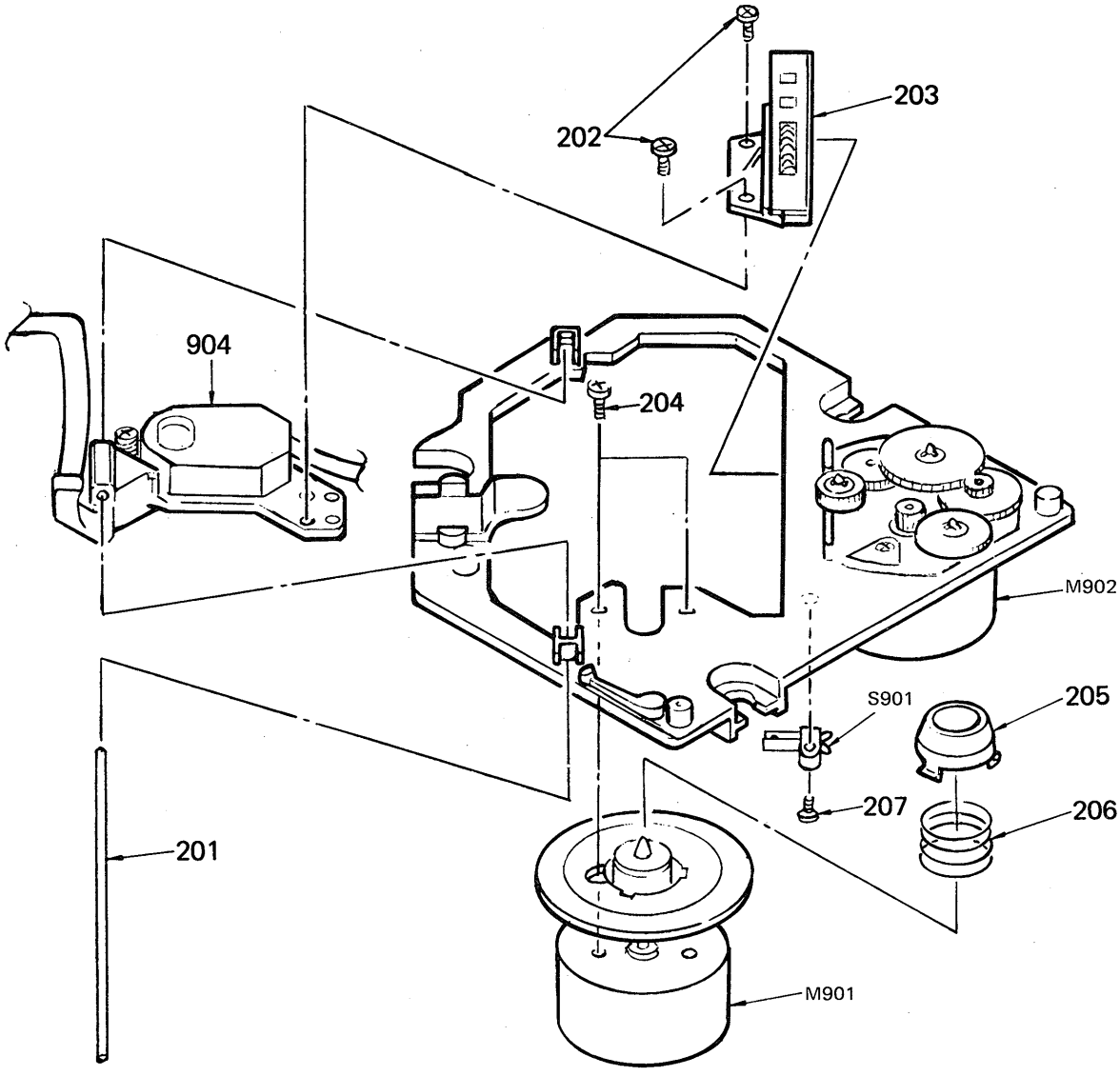

Ref.No	Part No.	Description	Remark
201	*2-641-534-01	SHAFT	
202	2-641-383-01	SCREW (M1.7X4) (NK), TOOTH	
203	X-2641-528-1	RACK ASSY	
204	7-627-552-88	SCREW, PRECISION +P 1.7X2.2	
205	2-641-539-01	RING, CENTER	
206	2-641-524-01	SPRING (A), COMPRESSION	
207	7-685-103-19	SCREW +P 2X5 TYPE2 NON-SLIT	
904	⚠.8-848-081-21	DEVICE, OPTICAL KSS-162A(T)	
M901	X-2641-521-1	MOTOR ASSY, T.T. (SPINDLE)	
M902	X-2641-537-2	MOTOR ASSY (A) (SLED)	
S901	1-570-112-11	SWITCH, LEAF	

Note:
The components identified by mark ⚠ or dotted line with mark ⚠ are critical for safety. Replace only with part number specified.

Note:
Les composants identifiés par une marque ⚠ sont critiques pour la sécurité. Ne les remplacer que par une pièce portant le numéro spécifié.

SEE ADDITIONAL INFORMATION

SECTION 6
ELECTRICAL PARTS LIST

NOTE:

- Due to standardization, replacements in the parts list may be different from the parts specified in the diagrams or the components used on the set.
- Items marked "★" are not stocked since they are seldom required for routine service. Some delay should be anticipated when ordering these items.
- If there are two or more same circuits in a set such as a stereophonic machine, only typical circuit parts may be indicated and capacitors and resistors in other same circuits may be omitted.

CAPACITORS:
MF: μF, PF: μμF.

RESISTORS
- All resistors are in ohms.
- F: nonflammable

COILS
- MMH: mH, UH: μH

SEMICONDUCTORS
In each case, U: μ, for example:
UA...: μA..., UPA...: μPA...,
UPC...: μPC, UPD...: μPD...

The components identified by mark ⚠ or dotted line with mark ⚠ are critical for safety.
Replace only with part number specified.

Les composants identifiés par une marque ⚠ sont critiques pour la sécurité.
Ne les remplacer que par une pièce portant le numéro spécifié.

Ref.No	Part No.	Description			
901	A-3015-819-A	PC BOARD ASSY, MAIN			
902	1-558-894-11	WIRE, FLAT TYPE (20 CORE)			
903	★1-631-122-11	PC BOARD, CONTROL			
904	⚠8-848-081-21	DEVICE, OPTICAL KSS-162A(T)			
		CAPACITOR			
C101	1-163-086-00	CERAMIC CHIP	3PF	0.25PF	50V
C102	1-126-157-11	ELECT	10MF	20%	16V
C103	1-163-212-00	CERAMIC CHIP	0.002MF	5%	50V
C104	1-163-205-00	CERAMIC CHIP	0.001MF	5%	50V
C105	1-163-111-00	CERAMIC CHIP	56PF	5%	50V
C106	1-164-161-11	CERAMIC CHIP	0.0022MF	10%	50V
C107	1-135-149-21	TANTAL. CHIP	2.2MF	20%	6.3V
C108	1-135-149-21	TANTAL. CHIP	2.2MF	20%	6.3V
C109	1-124-584-00	ELECT	100MF	20%	10V
C110	1-163-117-00	CERAMIC CHIP	100PF	5%	50V
C111	1-163-117-00	CERAMIC CHIP	100PF	5%	50V
C201	1-163-086-00	CERAMIC CHIP	3PF	0.25PF	50V
C202	1-126-157-11	ELECT	10MF	20%	16V
C203	1-163-212-00	CERAMIC CHIP	0.002MF	5%	50V
C204	1-163-205-00	CERAMIC CHIP	0.001MF	5%	50V
C205	1-163-111-00	CERAMIC CHIP	56PF	5%	50V
C206	1-164-161-11	CERAMIC CHIP	0.0022MF	10%	50V
C207	1-135-149-21	TANTAL. CHIP	2.2MF	20%	6.3V
C208	1-135-149-21	TANTAL. CHIP	2.2MF	20%	6.3V
C209	1-124-584-00	ELECT	100MF	20%	10V
C210	1-163-117-00	CERAMIC CHIP	100PF	5%	50V
C211	1-163-117-00	CERAMIC CHIP	100PF	5%	50V
C301	1-124-584-00	ELECT	100MF	20%	10V
C302	1-124-584-00	ELECT	100MF	20%	10V
C303	1-163-141-00	CERAMIC CHIP	0.001MF	5%	50V
C305	1-126-157-11	ELECT	10MF	20%	16V
C306	1-124-584-00	ELECT	100MF	20%	10V
C307	1-124-584-00	ELECT	100MF	20%	10V
C308	1-163-038-00	CERAMIC CHIP	0.1MF		25V
C309	1-163-141-00	CERAMIC CHIP	0.001MF	5%	50V
C323	1-164-232-11	CERAMIC CHIP	0.01MF	10%	50V
C324	1-164-232-11	CERAMIC CHIP	0.01MF	10%	50V
C401	1-164-232-11	CERAMIC CHIP	0.01MF	10%	50V
C402	1-164-232-11	CERAMIC CHIP	0.01MF	10%	50V
C403	1-126-357-11	ELECT	150MF	20%	16V
C406	1-124-584-00	ELECT	100MF	20%	10V
C411	1-126-157-11	ELECT	10MF	20%	16V
C412	1-126-094-11	ELECT	4.7MF	20%	16V
C414	1-126-157-11	ELECT	10MF	20%	16V
C430	1-135-149-21	TANTAL. CHIP	2.2MF	20%	6.3V
C450	1-124-257-00	ELECT	2.2MF	20%	50V
C501	1-163-038-00	CERAMIC CHIP	0.1MF		25V
C502	1-164-232-11	CERAMIC CHIP	0.01MF	10%	50V
C503	1-124-431-00	ELECT	33MF	20%	4V
C505	1-163-078-11	CERAMIC CHIP	0.033MF	10%	25V
C506	1-164-232-11	CERAMIC CHIP	0.01MF	10%	50V
C507	1-135-070-00	TANTAL. CHIP	0.1MF	20%	35V
C508	1-163-038-00	CERAMIC CHIP	0.1MF		25V
C509	1-124-431-00	ELECT	33MF	20%	4V
C510	1-163-038-00	CERAMIC CHIP	0.1MF		25V
C511	1-164-232-11	CERAMIC CHIP	0.01MF	10%	50V
C512	1-124-584-00	ELECT	100MF	20%	10V
C513	1-124-431-00	ELECT	33MF	20%	4V
C514	1-163-095-00	CERAMIC CHIP	12PF	5%	50V
C515	1-163-117-00	CERAMIC CHIP	100PF	5%	50V
C516	1-163-038-00	CERAMIC CHIP	0.1MF		25V
C517	1-163-038-00	CERAMIC CHIP	0.1MF		25V
C518	1-164-232-11	CERAMIC CHIP	0.01MF	10%	50V
C519	1-163-038-00	CERAMIC CHIP	0.1MF		25V
C520	1-163-037-11	CERAMIC CHIP	0.022MF	10%	25V
C521	1-163-117-00	CERAMIC CHIP	100PF	5%	50V
C522	1-124-239-00	ELECT	6.8MF	20%	25V
C523	1-124-239-00	ELECT	6.8MF	20%	25V
C524	1-126-153-11	ELECT	22MF	20%	6.3V
C525	1-163-038-00	CERAMIC CHIP	0.1MF		25V
C527	1-163-081-00	CERAMIC CHIP	0.22MF		25V
C528	1-126-153-11	ELECT	22MF	20%	6.3V
C529	1-163-125-00	CERAMIC CHIP	220PF	5%	50V
C531	1-163-038-00	CERAMIC CHIP	0.1MF		25V
C532	1-163-038-00	CERAMIC CHIP	0.1MF		25V
C533	1-162-638-11	CERAMIC CHIP	1MF		16V
C534	1-163-038-00	CERAMIC CHIP	0.1MF		25V
C535	1-163-009-11	CERAMIC CHIP	0.001MF	10%	50V
C536	1-163-078-11	CERAMIC CHIP	0.033MF	10%	25V
C537	1-135-145-11	TANTAL. CHIP	0.47MF	20%	25V
C538	1-124-434-00	ELECT	220MF	20%	4V
C539	1-163-009-11	CERAMIC CHIP	0.001MF	10%	50V
C540	1-162-637-11	CERAMIC CHIP	0.47MF		16V
C543	1-126-160-11	ELECT	1MF	20%	50V
C544	1-126-157-11	ELECT	10MF	20%	16V
C546	1-163-986-00	CERAMIC CHIP	0.027MF	10%	25V
C547	1-162-638-11	CERAMIC CHIP	1MF		16V
C548	1-126-162-11	ELECT	3.3MF	20%	50V
C549	1-126-157-11	ELECT	10MF	20%	16V
C550	1-163-141-00	CERAMIC CHIP	0.001MF	5%	50V
C551	1-126-157-11	ELECT	10MF	20%	16V
C552	1-126-160-11	ELECT	1MF	20%	50V
C553	1-162-638-11	CERAMIC CHIP	1MF		16V
C554	1-162-637-11	CERAMIC CHIP	0.47MF		16V
C555	1-163-081-00	CERAMIC CHIP	0.22MF		25V
C556	1-163-143-00	CERAMIC CHIP	0.0012MF	10%	50V
C557	1-163-017-00	CERAMIC CHIP	0.0047MF	10%	50V
C558	1-163-038-00	CERAMIC CHIP	0.1MF		25V
C559	1-124-584-00	ELECT	100MF	20%	10V
C561	1-163-038-00	CERAMIC CHIP	0.1MF		25V
C562	1-162-638-11	CERAMIC CHIP	1MF		16V
C601	1-163-038-00	CERAMIC CHIP	0.1MF		25V
C602	1-163-095-00	CERAMIC CHIP	12PF	5%	50V
C603	1-163-095-00	CERAMIC CHIP	12PF	5%	50V
C604	1-163-038-00	CERAMIC CHIP	0.1MF		25V
C605	1-162-638-11	CERAMIC CHIP	1MF		16V
C606	1-163-117-00	CERAMIC CHIP	100PF	5%	50V
C607	1-163-037-11	CERAMIC CHIP	0.022MF	10%	25V
C801	1-163-141-00	CERAMIC CHIP	0.001MF	5%	50V

SEE ADDITIONAL INFORMATION

Ref.No	Part No.	Description			
C802	1-163-038-00	CERAMIC CHIP	0.1MF		25V
C803	1-135-149-21	TANTAL. CHIP	2.2MF	20%	6.3V
C804	1-124-257-00	ELECT	2.2MF	20%	50V
C805	1-163-109-00	CERAMIC CHIP	47PF	5%	50V
C806	1-163-109-00	CERAMIC CHIP	47PF	5%	50V
C807	1-164-232-11	CERAMIC CHIP	0.01MF	10%	50V
C808	1-162-638-11	CERAMIC CHIP	1MF		16V
C809	1-135-149-21	TANTAL. CHIP	2.2MF	20%	10V
C810	1-162-638-11	CERAMIC CHIP	1MF		16V
C811	1-163-038-00	CERAMIC CHIP	0.1MF		25V
C812	1-162-637-11	CERAMIC CHIP	0.47MF		16V
C813	1-163-081-11	CERAMIC CHIP	0.22MF	10%	25V
C901	1-124-584-00	ELECT	100MF	20%	10V
CN501	1-566-976-11	SOCKET, CONNECTOR 12P			
CN502	1-565-309-11	CONNECTOR, FLEXIBLE 4P			
CN801	1-563-589-11	CONNECTOR, FLEXIBLE 12P			
CN802	1-563-615-11	CONNECTOR, FLEXIBLE 12P			
CNJ401	1-562-961-11	JACK (DC IN 9V)			
D401	8-719-200-36	DIODE E10QS04			
D402	8-719-106-22	DIODE RD7.5M-B1			
D409	8-719-938-75	DIODE SB05-05CP			
D418	8-719-105-91	DIODE RD5.6M-B2			
D501	8-719-938-72	DIODE SB01-05CP			
D502	8-719-938-72	DIODE SB01-05CP			
D503	8-719-938-72	DIODE SB01-05CP			
D504	8-719-106-53	DIODE RD10M-B2			
D505	8-719-100-05	DIODE 1S2837			
D507	8-719-100-05	DIODE 1S2837			
D601	8-719-100-05	DIODE 1S2837			
D801	8-719-951-22	DIODE IMN10			
D803	8-719-951-22	DIODE IMN10			
D804	8-719-100-05	DIODE 1S2837			
D805	8-719-106-71	DIODE RD12M-B2			
D806	8-719-100-05	DIODE 1S2837			
D807	8-719-100-05	DIODE 1S2837			
D901	8-719-980-46	DIODE SLP-681C			
D902	8-719-980-46	DIODE SLP-681C			
D903	8-719-980-46	DIODE SLP-681C			
D904	8-719-980-46	DIODE SLP-681C			
D905	8-719-980-46	DIODE SLP-681C			
D906	8-719-980-46	DIODE SLP-681C			
D907	8-719-980-46	DIODE SLP-681C			
IC301	8-759-805-34	IC CXD1161M-3			
IC302	8-759-630-75	IC M51568FP			
IC303	8-759-981-99	IC RC4560M			
IC501	8-752-033-55	IC CXA1271Q			
IC502	8-752-033-54	IC CXA1272Q-Z			
IC503	8-759-970-89	IC BA10358F			
IC504	8-759-030-17	IC MPC1715FU			
IC505	8-759-230-43	IC TC7S04F			
IC601	8-752-329-71	IC CXD1246Q			
IC602	8-752-323-65	IC CXK5816M-15L			
IC801	8-752-811-69	IC CXP5024-089Q			
IC802	8-759-981-65	IC LM2903M			
J301	1-566-800-61	JACK (LINE OUT)			
J302	1-566-800-11	JACK (PHONES)			
J801	1-566-800-81	JACK (REMOTE)			
JR202	1-216-296-00	METAL GLAZE	0	5%	1/8W
JR307	1-216-295-00	METAL GLAZE	0	5%	1/10W
JR401	1-216-295-00	METAL GLAZE	0	5%	1/10W
JR406	1-216-296-00	METAL GLAZE	0	5%	1/8W
JR501	1-216-295-00	METAL GLAZE	0	5%	1/10W
JR901	1-216-295-00	METAL GLAZE	0	5%	1/10W

Ref.No	Part No.	Description			
L402	1-412-032-11	INDUCTOR CHIP 100UH			
L403	1-412-031-11	INDUCTOR CHIP 47UH			
L501	1-412-029-11	INDUCTOR CHIP 10UH			
L502	1-412-039-51	INDUCTOR CHIP 100UH			
L503	1-412-032-11	INDUCTOR CHIP 100UH			
L504	1-412-032-11	INDUCTOR CHIP 100UH			
L505	1-412-039-51	INDUCTOR CHIP 100UH			
L506	1-412-029-11	INDUCTOR CHIP 10UH			
LCD1	1-808-793-11	DISPLAY PANEL, LIQUID CRYSTAL			
M901	X-2641-521-1	MOTOR ASSY, T.T. (SPINDLE)			
M902	X-2641-537-2	MOTOR ASSY (A) (SLED)			
PL901	1-518-585-11	LAMP, PILOT			
PL902	1-518-657-11	LAMP, PILOT			
Q302	8-729-159-64	TRANSISTOR 2SD596			
Q303	8-729-159-64	TRANSISTOR 2SD596			
Q304	8-729-159-64	TRANSISTOR 2SD596			
Q305	8-729-159-64	TRANSISTOR 2SD596			
Q409	8-729-216-22	TRANSISTOR 2SA1162G			
Q410	8-729-807-87	TRANSISTOR 2SB1295UL6			
Q412	8-729-800-37	TRANSISTOR 2SD1048X7			
Q413	8-729-806-75	TRANSISTOR 2SB1120			
Q414	8-729-903-10	TRANSISTOR FMW1			
Q423	8-729-907-28	TRANSISTOR IMD3			
Q424	8-729-903-10	TRANSISTOR FMW1			
Q451	8-729-922-27	TRANSISTOR 2SD1758F5R			
Q453	8-729-103-72	TRANSISTOR 2SD1005-BV			
Q501	8-729-216-22	TRANSISTOR 2SA1162G			
Q502	8-729-159-64	TRANSISTOR 2SD596			
Q503	8-729-902-99	TRANSISTOR DTC114TK			
Q504	8-729-271-23	TRANSISTOR 2SC2712			
Q506	8-729-903-29	TRANSISTOR DTA144TK			
Q507	8-729-903-30	TRANSISTOR DTC144TK			
Q801	8-729-901-05	TRANSISTOR DTA124EK			
Q802	8-729-159-64	TRANSISTOR 2SD596			
Q803	8-729-907-28	TRANSISTOR IMD3			
Q804	8-729-159-64	TRANSISTOR 2SD596			
Q901	8-729-103-72	TRANSISTOR 2SD1005-BV			
Q902	8-729-903-30	TRANSISTOR DTC144TK			

RESISTOR

R101	1-216-329-11	METAL GLAZE	5.1K	1%	1/10W
R102	1-216-336-11	METAL GLAZE	47K	1%	1/10W
R103	1-216-333-11	METAL GLAZE	15K	1%	1/10W
R104	1-218-160-11	METAL GLAZE	43K	1%	1/10W
R105	1-216-328-11	METAL GLAZE	4.3K	1%	1/10W
R106	1-216-333-11	METAL GLAZE	15K	1%	1/10W
R107	1-216-063-00	METAL GLAZE	3.9K	5%	1/10W
R108	1-216-053-00	METAL GLAZE	1.5K	5%	1/10W
R109	1-216-077-00	METAL GLAZE	15K	5%	1/10W
R110	1-216-009-00	METAL GLAZE	22	5%	1/10W
R111	1-216-073-00	METAL GLAZE	10K	5%	1/10W
R112	1-216-033-00	METAL GLAZE	220	5%	1/10W
R114	1-216-053-00	METAL GLAZE	1.5K	5%	1/10W
R115	1-216-073-00	METAL GLAZE	10K	5%	1/10W
R116	1-216-097-00	METAL GLAZE	100K	5%	1/10W
R117	1-216-073-00	METAL GLAZE	10K	5%	1/10W
R201	1-216-329-11	METAL GLAZE	5.1K	1%	1/10W
R202	1-216-336-11	METAL GLAZE	47K	1%	1/10W
R203	1-216-333-11	METAL GLAZE	15K	1%	1/10W
R204	1-218-160-11	METAL GLAZE	43K	1%	1/10W
R205	1-216-328-11	METAL GLAZE	4.3K	1%	1/10W
R206	1-216-333-11	METAL GLAZE	15K	1%	1/10W
R207	1-216-063-00	METAL GLAZE	3.9K	5%	1/10W
R208	1-216-053-00	METAL GLAZE	1.5K	5%	1/10W

SEE ADDITIONAL INFORMATION

Ref.No	Part No.	Description			
R209	1-216-077-00	METAL GLAZE	15K	5%	1/10W
R210	1-216-009-00	METAL GLAZE	22	5%	1/10W
R211	1-216-073-00	METAL GLAZE	10K	5%	1/10W
R212	1-216-182-00	METAL GLAZE	220	5%	1/8W
R214	1-216-053-00	METAL GLAZE	1.5K	5%	1/10W
R215	1-216-073-00	METAL GLAZE	10K	5%	1/10W
R216	1-216-097-00	METAL GLAZE	100K	5%	1/10W
R217	1-216-073-00	METAL GLAZE	10K	5%	1/10W
R302	1-216-298-00	METAL GLAZE	2.2	5%	1/10W
R303	1-216-121-00	METAL GLAZE	1M	5%	1/10W
R327	1-216-057-00	METAL GLAZE	2.2K	5%	1/10W
R328	1-216-057-00	METAL GLAZE	2.2K	5%	1/10W
R419	1-216-045-00	METAL GLAZE	680	5%	1/10W
R420	1-216-041-00	METAL GLAZE	470	5%	1/10W
R421	1-216-092-00	METAL GLAZE	62K	5%	1/10W
R422	1-216-067-00	METAL GLAZE	5.6K	5%	1/10W
R423	1-216-045-00	METAL GLAZE	680	5%	1/10W
R424	1-216-081-00	METAL GLAZE	22K	5%	1/10W
R425	1-216-049-00	METAL GLAZE	1K	5%	1/10W
R426	1-216-033-00	METAL GLAZE	220	5%	1/10W
R427	1-216-056-00	METAL GLAZE	2K	5%	1/10W
R428	1-216-062-00	METAL GLAZE	3.6K	5%	1/10W
R429	1-216-095-00	METAL GLAZE	82K	5%	1/10W
R430	1-216-061-00	METAL GLAZE	3.3K	5%	1/10W
R431	1-216-073-00	METAL GLAZE	10K	5%	1/10W
R437	1-216-686-11	METAL CHIP	30K	0.50%	1/10W
R438	1-216-053-00	METAL GLAZE	1.5K	5%	1/10W
R439	1-216-694-11	METAL CHIP	62K	0.50%	1/10W
R446	1-216-009-00	METAL GLAZE	22	5%	1/10W
R448	1-216-041-00	METAL GLAZE	470	5%	1/10W
R480	1-216-025-00	METAL GLAZE	100	5%	1/10W
R501	1-216-024-00	METAL GLAZE	91	5%	1/10W
R502	1-216-069-00	METAL GLAZE	6.8K	5%	1/10W
R503	1-216-049-00	METAL GLAZE	1K	5%	1/10W
R504	1-216-073-00	METAL GLAZE	10K	5%	1/10W
R506	1-216-081-00	METAL GLAZE	22K	5%	1/10W
R508	1-216-069-00	METAL GLAZE	6.8K	5%	1/10W
R509	1-216-077-00	METAL GLAZE	15K	5%	1/10W
R510	1-216-073-00	METAL GLAZE	10K	5%	1/10W
R511	1-216-150-00	METAL GLAZE	10	5%	1/8W
R512	1-216-085-00	METAL GLAZE	33K	5%	1/10W
R513	1-216-073-00	METAL GLAZE	10K	5%	1/10W
R514	1-216-073-00	METAL GLAZE	10K	5%	1/10W
R515	1-216-097-00	METAL GLAZE	100K	5%	1/10W
R516	1-216-121-00	METAL GLAZE	1M	5%	1/10W
R517	1-216-093-00	METAL GLAZE	68K	5%	1/10W
R518	1-216-097-00	METAL GLAZE	100K	5%	1/10W
R519	1-216-119-00	METAL GLAZE	820K	5%	1/10W
R520	1-216-095-00	METAL GLAZE	82K	5%	1/10W
R521	1-216-095-00	METAL GLAZE	82K	5%	1/10W
R522	1-216-081-00	METAL GLAZE	22K	5%	1/10W
R523	1-216-059-00	METAL GLAZE	2.7K	5%	1/10W
R524	1-216-089-00	METAL GLAZE	47K	5%	1/10W
R525	1-216-097-00	METAL GLAZE	100K	5%	1/10W
R526	1-216-114-00	METAL GLAZE	510K	5%	1/10W
R528	1-216-077-00	METAL GLAZE	15K	5%	1/10W
R529	1-216-686-11	METAL CHIP	30K	0.50%	1/10W
R530	1-216-686-11	METAL CHIP	30K	0.50%	1/10W
R531	1-216-059-00	METAL GLAZE	2.7K	5%	1/10W
R532	1-216-103-00	METAL GLAZE	180K	5%	1/10W
R533	1-216-062-00	METAL GLAZE	3.6K	5%	1/10W
R534	1-216-121-00	METAL GLAZE	1M	5%	1/10W
R536	1-216-099-00	METAL GLAZE	120K	5%	1/10W
R537	1-216-083-00	METAL GLAZE	27K	5%	1/10W
R538	1-216-094-00	METAL GLAZE	75K	5%	1/10W

Ref.No	Part No.	Description			
R539	1-216-094-00	METAL GLAZE	75K	5%	1/10W
R540	1-216-086-00	METAL GLAZE	36K	5%	1/10W
R544	1-216-077-00	METAL GLAZE	15K	5%	1/10W
R545	1-216-121-00	METAL GLAZE	1M	5%	1/10W
R546	1-216-065-00	METAL GLAZE	4.7K	5%	1/10W
R547	1-216-057-00	METAL GLAZE	2.2K	5%	1/10W
R548	1-216-057-00	METAL GLAZE	2.2K	5%	1/10W
R549	1-216-065-00	METAL GLAZE	4.7K	5%	1/10W
R550	1-216-049-00	METAL GLAZE	1K	5%	1/10W
R551	1-216-049-00	METAL GLAZE	1K	5%	1/10W
R552	1-216-081-00	METAL GLAZE	22K	5%	1/10W
R553	1-216-049-00	METAL GLAZE	1K	5%	1/10W
R554	1-216-033-00	METAL GLAZE	220	5%	1/10W
R555	1-216-081-00	METAL GLAZE	22K	5%	1/10W
R556	1-216-073-00	METAL GLAZE	10K	5%	1/10W
R557	1-216-049-00	METAL GLAZE	1K	5%	1/10W
R558	1-216-073-00	METAL GLAZE	10K	5%	1/10W
R559	1-216-065-00	METAL GLAZE	4.7K	5%	1/10W
R560	1-216-129-00	METAL GLAZE	2.2M	5%	1/10W
R561	1-216-065-00	METAL GLAZE	4.7K	5%	1/10W
R562	1-216-097-00	METAL GLAZE	100K	5%	1/10W
R563	1-216-121-00	METAL GLAZE	1M	5%	1/10W
R564	1-216-105-00	METAL GLAZE	220K	5%	1/10W
R601	1-216-097-00	METAL GLAZE	100K	5%	1/10W
R602	1-216-089-00	METAL GLAZE	47K	5%	1/10W
R801	1-216-089-00	METAL GLAZE	47K	5%	1/10W
R802	1-216-238-00	METAL GLAZE	47K	5%	1/8W
R803	1-216-109-00	METAL GLAZE	330K	5%	1/10W
R804	1-216-041-00	METAL GLAZE	470	5%	1/10W
R806	1-216-089-00	METAL GLAZE	47K	5%	1/10W
R807	1-216-073-00	METAL GLAZE	10K	5%	1/10W
R808	1-216-053-00	METAL GLAZE	1.5K	5%	1/10W
R809	1-216-059-00	METAL GLAZE	2.7K	5%	1/10W
R810	1-216-071-00	METAL GLAZE	8.2K	5%	1/10W
R811	1-216-077-00	METAL GLAZE	15K	5%	1/10W
R812	1-216-077-00	METAL GLAZE	15K	5%	1/10W
R813	1-216-077-00	METAL GLAZE	15K	5%	1/10W
R818	1-216-097-00	METAL GLAZE	100K	5%	1/10W
R819	1-216-089-00	METAL GLAZE	47K	5%	1/10W
R901	1-216-097-00	METAL GLAZE	100K	5%	1/10W
R902	1-216-073-00	METAL GLAZE	10K	5%	1/10W
R903	1-216-027-00	METAL GLAZE	120	5%	1/10W
R904	1-216-029-00	METAL GLAZE	150	5%	1/10W
R905	1-216-029-00	METAL GLAZE	150	5%	1/10W
RV301	1-230-485-11	RES, VAR, CARBON 10K/10K (VOLUME)			
RV401	1-237-802-11	RES, ADJ, CARBON 4.7K			
RV501	1-238-498-11	RES, ADJ, CARBON 47K			
RV502	1-230-526-11	RES, ADJ, METAL GLAZE 47K			
RV503	1-238-497-11	RES, ADJ, CARBON 22K			
RV504	1-230-526-11	RES, ADJ, METAL GLAZE 47K			
RV505	1-228-990-00	RES, ADJ, CARBON 1K			
S401	1-554-843-11	SWITCH, SLIDE (HOLD/RESUME)			
S801	1-554-297-31	SWITCH, LEAF			
S803	1-554-371-51	SWITCH, TACT (▶II)			
S804	1-570-993-11	SWITCH, TACT (■)			
S805	1-554-371-51	SWITCH, TACT (▶▶I)			
S806	1-554-371-51	SWITCH, TACT (I◀◀)			
S807	1-570-993-11	SWITCH, TACT (PLAY MODE)			
S808	1-570-993-11	SWITCH, TACT (KEY MODE)			
S901	1-570-112-11	SWITCH, LEAF			
X601	1-567-737-11	VIBRATOR, CRYSTAL (16.9344MHz)			
X801	1-577-064-11	VIBRATOR, CHIP CERAMIC (3.58MHz)			

SEE ADDITIONAL INFORMATION

Part No.	Description
ACCESSORIES & PACKING MATERIALS	
**********	
⚠.1-463-694-11	(Canadian)....ADAPTOR, AC (AC-930A)
⚠.1-463-701-11	(Australian)....ADAPTOR, AC (AC-930A)
⚠.1-463-702-11	(E)....ADAPTOR, AC (AC-950W)
⚠.1-463-705-11	(AEP)....ADAPTOR, AC (AC-930AEP)
⚠.1-463-968-11	(US)....ADAPTOR, AC (AC-940)
⚠.1-532-740-11	FUSE, GLASS TUBE
1-555-658-21	CORD, CONNECTION
1-559-145-11	CORD (CAR BATTERY) (DCC-50)
1-568-928-11	PLUG (for DCC-50)
3-707-312-01	CAP (WITH CHIP) (for DCC-50)
3-750-714-11	(Canadian, AEP, E, Australian).... MANUAL, INSTRUCTION
3-750-714-21	(US)....MANUAL, INSTRUCTION
3-750-714-41	(AEP)....MANUAL, INSTRUCTION
*4-916-236-01	CUSHION (UPPER)
*4-916-237-01	(US, Canadian, E)....CUSHION (LOWER)
*4-916-238-01	(US)....INDIVIDUAL CARTON
*4-920-407-01	BAG, PROTECTION
*4-916-240-01	(Canadian)....INDIVIDUAL CARTON
*4-916-244-01	(E)....INDIVIDUAL CARTON
*4-916-246-01	(AEP, Australian).... CUSHION (LOWER)
*4-916-246-01	(AEP)....INDIVIDUAL CARTON
*4-916-247-01	(Australian)....INDIVIDUAL CARTON

Note: The components identified by mark ⚠ or dotted line with mark ⚠ are critical for safety. Replace only with part number specified.	**Note:** Les composants identifiés par une marque ⚠ sont critiques pour la sécurité. Ne les remplacer que par une pièce portant le numéro spécifié.

9-953-927-11

Sony Corporation
Audio Group

English
89H0672-1
Printed in Japan

Published by A/V Engineering Service Dept.

D-180K/800K

SONY®
SERVICE MANUAL

US Model
Canadian Model
D-180K

AEP Model
E Model
Australian Model
D-800K

SUPPLEMENT-1

File this supplement with the service manual.

Subject: Circuit changed.

Page	FORMER TYPE				NEW TYPE			
	Ref. No.	Description			Part No.	Description		
	IC601	CXD1246Q			8-752-341-93	CXD1167Q		
	IC602	CXK5816M-15L						
17	C604	CERAMIC CHIP	0.1 μF	25V	1-164-234-11	CERAMIC CHIP	1 μF	10V
	C605	CERAMIC CHIP	1 μF	16V				
	R105	METAL GLAZE	4.3K		1-216-602-11	METAL GLAZE	6.8K	
	R205	METAL GLAZE	4.3K		1-216-602-11	METAL GLAZE	6.8K	

: Changed portion

1. PRINTED WIRING BOARDS (Service Manual Pages 11-13.)

Location (D-16)

【MAIN BOARD】 (SIDE A)

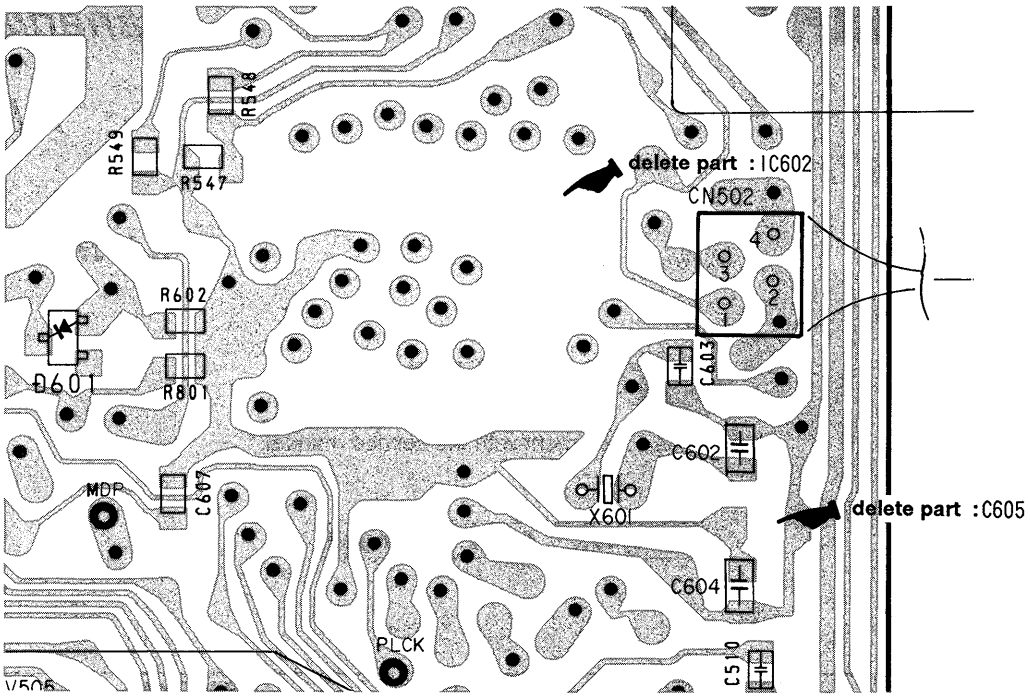

Location (E-3)

【MAIN BOARD】 (SIDE B)

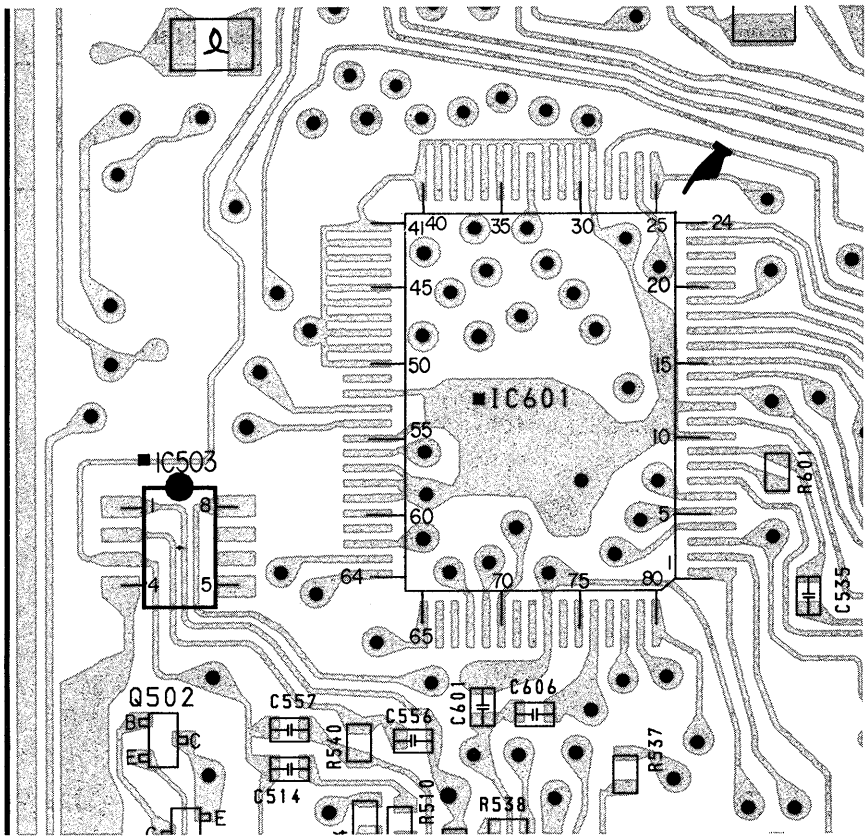

: Changed portion

2. SCHEMATIC DIAGRAM (Service Manual Page 17.)

[MAIN BOARD]

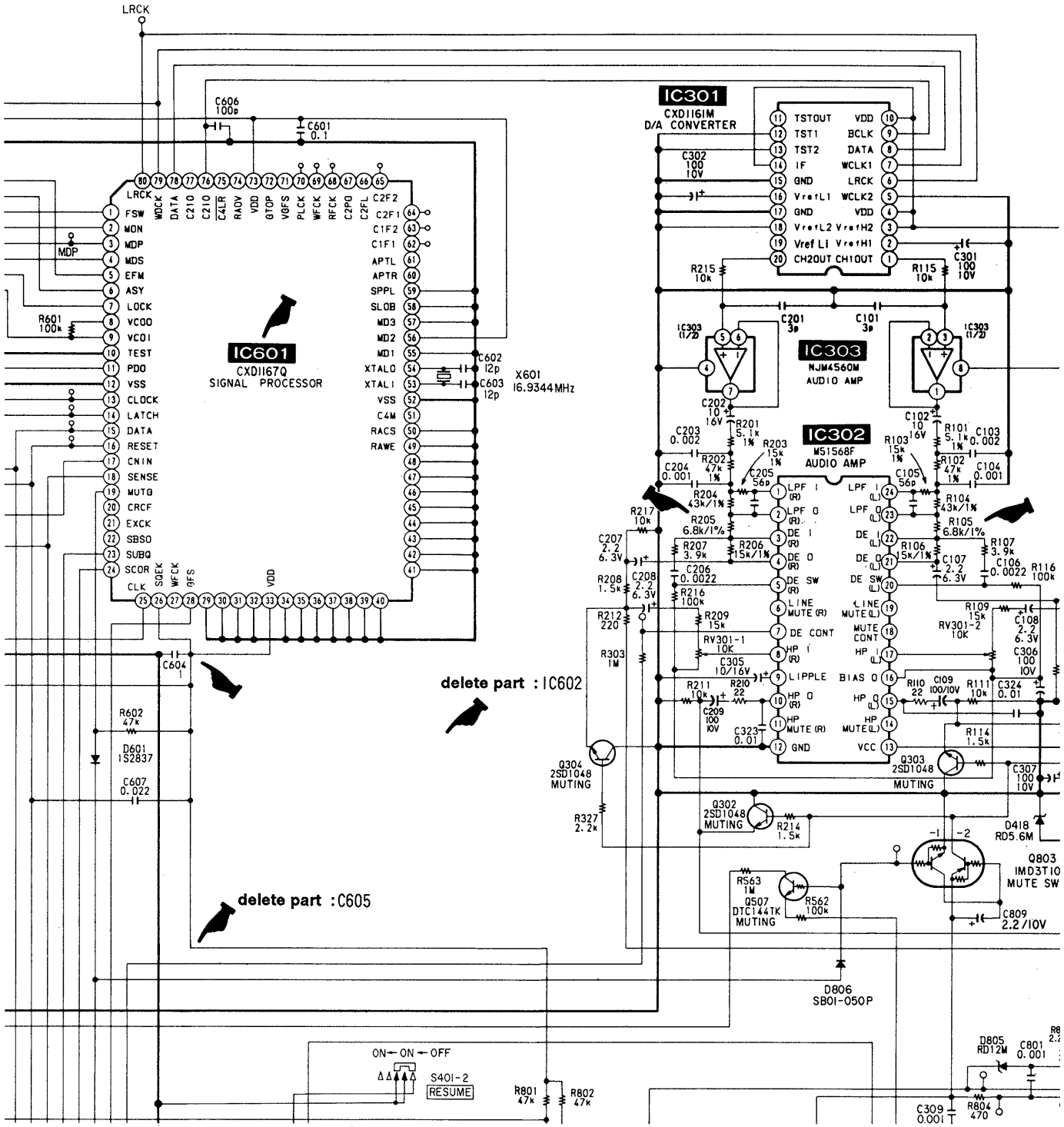

9-953-927-81

Sony Corporation
Audio Group

English
92G0686-1
Printed in Japan

Published by Customer Relations and Service Group

D-180K/800K

SONY®
SERVICE MANUAL

US Model
Canadian Model
D-180K
AEP Model
E Model
Australian Model
D-800K

SUPPLEMENT-2

File this supplement with the service manual.

We inform the user that according to change of the suffix of the printed wiring board, the printed wiring board and schematic diagram have been changed.

● Semiconductor Location

Ref. No.	Location
D401	B-14
D402	C-14
D409	D-12
D418	I-7
D501	B-3
D502	B-3
D503	B-4
D504	B-3
D505	F-4
D507	G-15
D601	E-15
D801	H-3
D803	I-2
D804	I-17
D805	H-16
D806	I-4
D807	I-2
D901	I-25
D902	I-23
D903	I-22
D904	I-25
D905	I-24
D906	I-23
D907	I-22
IC301	F-6
IC302	H-6
IC303	G-6
IC501	G-2
IC502	G-4
IC503	E-2
IC504	C-3
IC505	B-4
IC601	E-3
IC602	D-16
IC801	H-15
IC802	H-4
Q302	J-6
Q303	I-7
Q304	H-13
Q305	I-13
Q409	D-13
Q410	C-12
Q412	D-13
Q413	D-13
Q414	D-13
Q423	E-6
Q424	D-12
Q451	D-6
Q453	C-13
Q501	F-2
Q502	F-2
Q503	H-3
Q504	H-15
Q506	G-15
Q507	J-13
Q801	I-2
Q802	J-17
Q803	I-13
Q804	J-14
Q901	B-14
Q902	B-13

Note :
- ○— : parts extracted from the component side.
- ● : Through hole.
- ■ : Pattern on the side which is seen.
- ■ : Pattern on the rear side.

PRINTED WIRING BOARDS

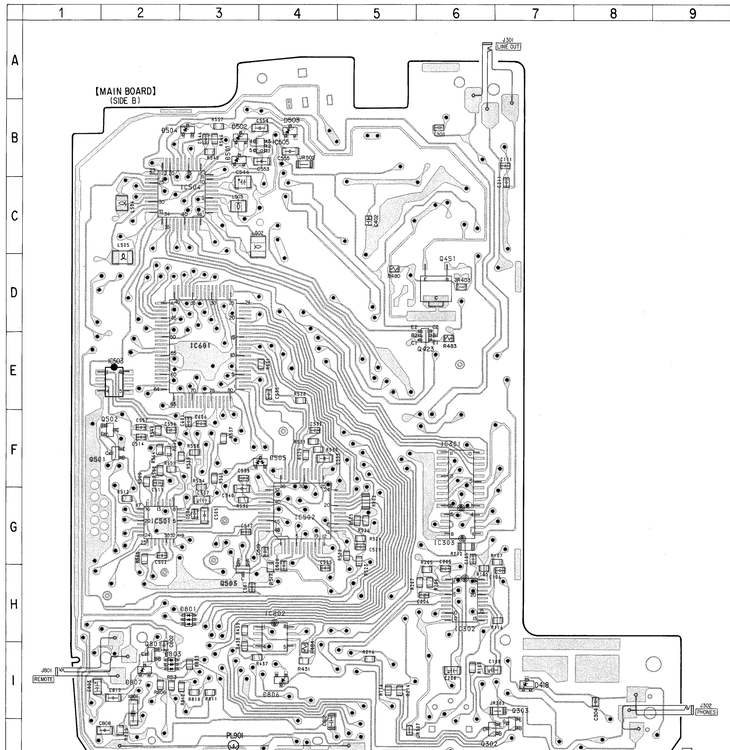

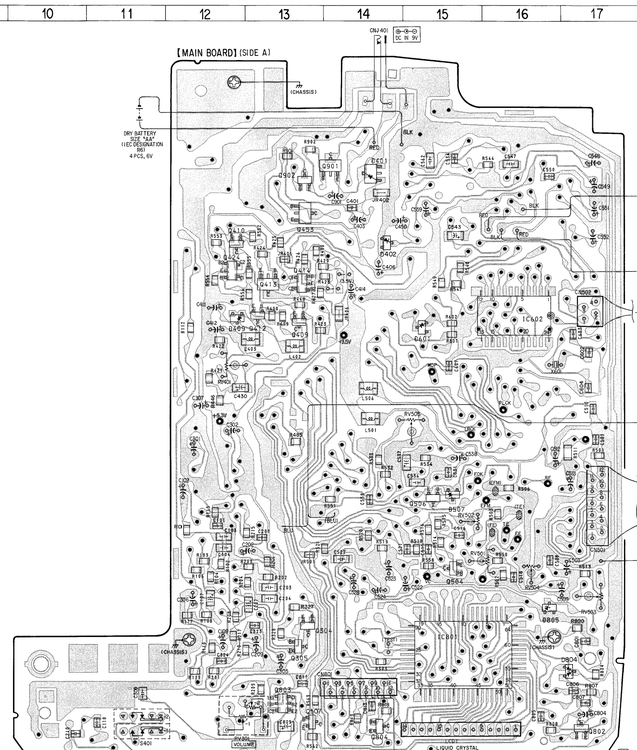

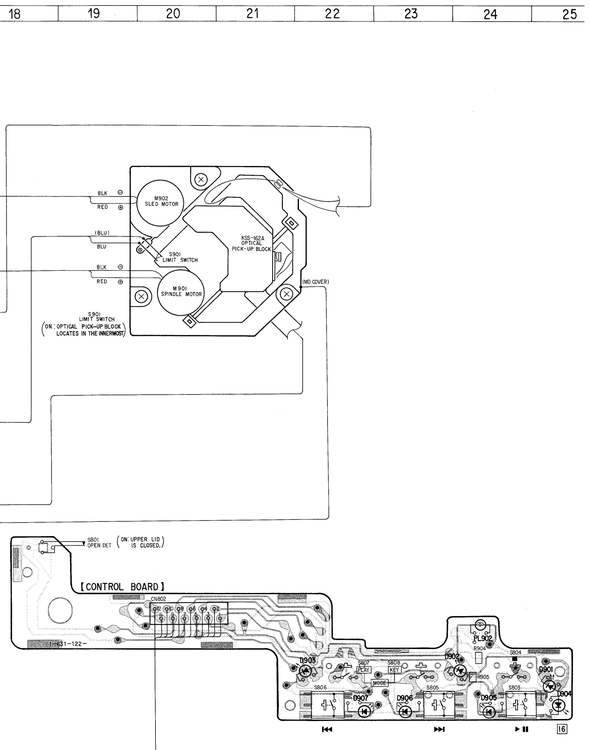

SCHEMATIC DIAGRAM

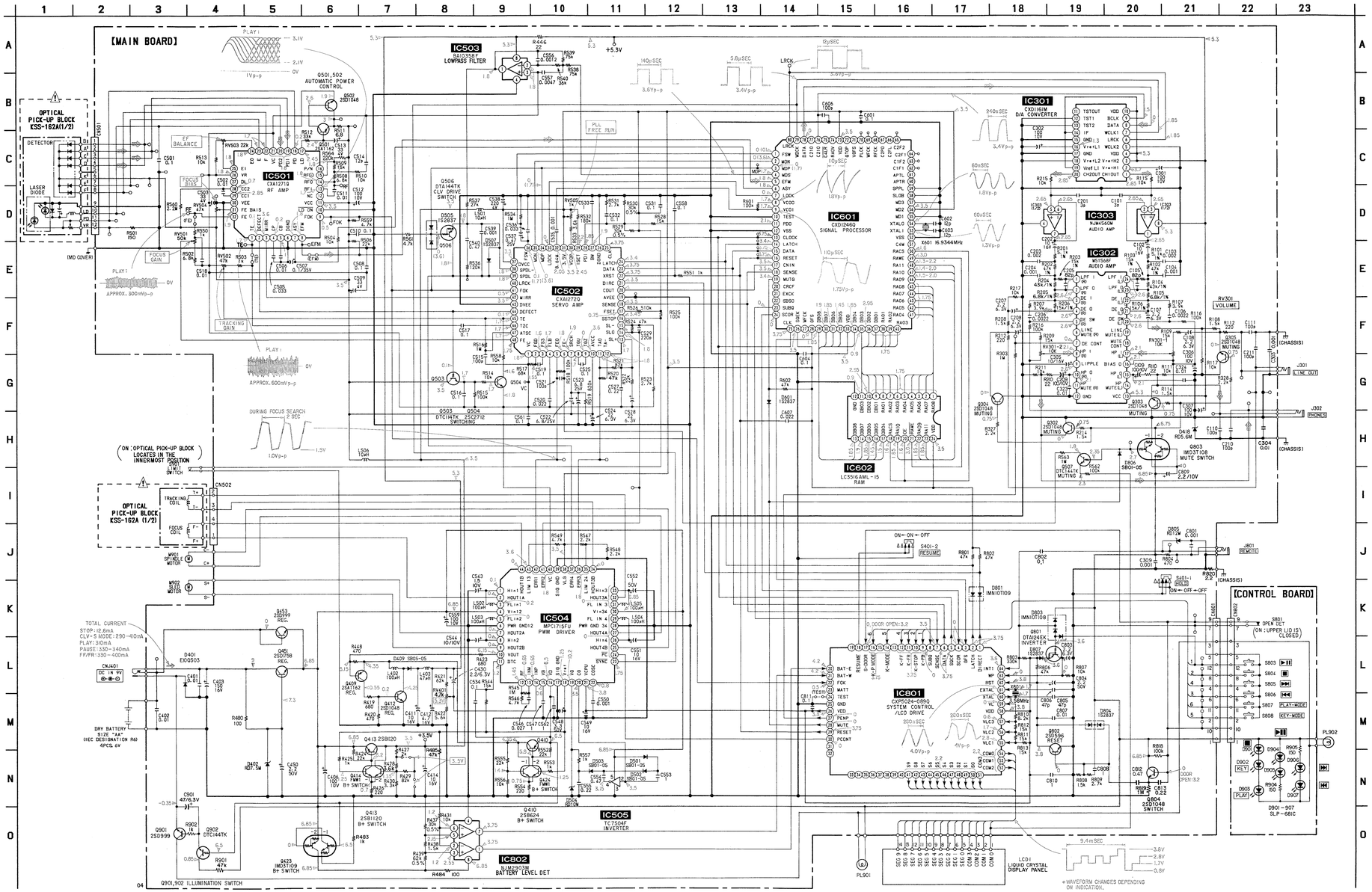

Note :

- All capacitors are in μF unless otherwise noted. pF : μμF 50WV or less are not indicated except for electrolytics and tantalums.
- All resistors are in Ω and 1/4 W or less unless otherwise specified.

Note :	Note :
The components identified by mark ⚠ or dotted line with mark ⚠ are critical for safety. Replace only with part number specified.	Les composants identifiés par une marque ⚠ sont critiques pour la sécurité. Ne les remplacer que par une pièce portant le numéro spécifié.

- ▭▭▭▭ : B+ Line
- ▭ : adjustment for repair.
- Power voltage is dc 9V and fed with regulated dc power supply from external power voltage jack.
- Voltage and waveforms are dc with respect to ground in service mode.
- no mark: STOP
  ( ): PLAY
- Voltages are taken with a VOM (Input Impedance 10MΩ). Voltage variations may be noted due to normal production tolerances.
- Waveforms are taken with a oscilloscope. Voltage variations may be noted due to normal production tolerances.
- Signal path.
  ⇒ : CD
- Total current is measured with disc installed.

ELECTRICAL PARTS LIST

CONTROL **MAIN**

NOTE:
- Due to standardization, replacements in the parts list may be different from the parts specified in the diagrams or the components used on the set.
- -XX and -X mean standardized parts, so they may have some difference from the original one.
- RESISTORS
  All resistors are in ohms.
  METAL:Metal-film resistor.
  METAL OXIDE: Metal oxide-film resistor.
  F:nonflammable
- Items marked "*" are not stocked since they are seldom required for routine service. Some delay should be anticipated when ordering these items.
- SEMICONDUCTORS
  In each case, u:μ, for example:
  uA..: μA.. uPA..: μPA..
  uPB..: μPB.. uPC..: μPC.. uPD..: μPD..
- CAPACITORS
  uF: μF
- COILS
  uH: μH

When indicating parts by reference number, please include the board.

Ref. No.	Part No.	Description			Remark
*	1-631-122-11	CONTROL BOARD			
		**********			
	4-916-250-01	HOLDER (LAMP)			
		< CONNECTOR >			
CN802	1-563-615-11	CONNECTOR, FLEXIBLE 12P			
		< DIODE >			
D901	8-719-980-46	LED SLP681C (■)			
D902	8-719-980-46	LED SLP681C (KEY MODE)			
D903	8-719-980-46	LED SLP681C (PLAY MODE)			
D904	8-719-980-46	LED SLP681C (II)			
D905	8-719-980-46	LED SLP681C (▶)			
D906	8-719-980-46	LED SLP681C (▶▶I)			
D907	8-719-980-46	LED SLP681C (I◀◀)			
		< PILOT LAMP >			
PL902	1-518-657-11	LAMP, PILOT			
		< RESISTOR >			
R904	1-216-029-00	METAL CHIP	150	5%	1/10W
R905	1-216-029-00	METAL CHIP	150	5%	1/10W
		< SWITCH >			
S801	1-554-297-31	SWITCH, LEAF (OPEN DET)			
S803	1-554-371-51	SWITCH, TACT (▶II)			
S804	1-570-993-11	SWITCH, TACT (■)			
S805	1-554-371-51	SWITCH, TACT (▶▶I)			
S806	1-554-371-51	SWITCH, TACT (I◀◀)			
S807	1-570-993-11	SWITCH, TACT (PLAY MODE)			
S808	1-570-993-11	SWITCH, TACT (KEY MODE)			

****

Ref. No.	Part No.	Description			Remark
*	A-3015-819-A	MAIN BOARD, COMPLETE			
		**********			
	3-335-797-21	SCREW (M1.4X3), TOOTHED LOCK			
	4-916-234-01	HOLDER, LCD			
*	4-916-256-01	SHEET, INSULATING, JACK			
	4-924-732-11	KNOB (VOLUME)			
		< CAPACITOR >			
C101	1-163-086-00	CERAMIC CHIP	3PF		50V
C102	1-126-157-11	ELECT	10uF	20%	16V
C103	1-163-212-00	CERAMIC CHIP	0.002uF	5%	50V
C104	1-163-205-00	CERAMIC CHIP	0.001uF	5%	50V
C105	1-163-115-00	CERAMIC CHIP	82PF	5%	50V
C106	1-164-161-11	CERAMIC CHIP	0.0022uF	10%	100V
C107	1-135-149-21	TANTALUM CHIP	2.2uF	20%	10V
C108	1-135-149-21	TANTALUM CHIP	2.2uF	20%	10V
C109	1-124-584-00	ELECT	100uF	20%	10V
C110	1-163-117-00	CERAMIC CHIP	100PF	5%	50V
C111	1-163-117-00	CERAMIC CHIP	100PF	5%	50V
C201	1-163-086-00	CERAMIC CHIP	3PF		50V
C202	1-126-157-11	ELECT	10uF	20%	16V
C203	1-163-212-00	CERAMIC CHIP	0.002uF	5%	50V
C204	1-163-205-00	CERAMIC CHIP	0.001uF	5%	50V
C205	1-163-115-00	CERAMIC CHIP	82PF	5%	50V
C206	1-164-161-11	CERAMIC CHIP	0.0022uF	10%	100V
C207	1-135-149-21	TANTALUM CHIP	2.2uF	20%	10V
C208	1-135-149-21	TANTALUM CHIP	2.2uF	20%	10V
C209	1-124-584-00	ELECT	100uF	20%	10V
C210	1-163-117-00	CERAMIC CHIP	100PF	5%	50V
C211	1-163-117-00	CERAMIC CHIP	100PF	5%	50V
C301	1-124-584-00	ELECT	100uF	20%	10V
C302	1-124-584-00	ELECT	100uF	20%	10V
C303	1-163-141-00	CERAMIC CHIP	0.001uF	5%	50V
C304	1-164-232-11	CERAMIC CHIP	0.01uF		50V
C305	1-126-157-11	ELECT	10uF	20%	16V
C306	1-124-584-00	ELECT	100uF	20%	10V
C307	1-124-584-00	ELECT	100uF	20%	10V
C309	1-163-141-00	CERAMIC CHIP	0.001uF	5%	50V
C323	1-164-232-11	CERAMIC CHIP	0.01uF		50V

MAIN

Ref. No.	Part No.	Description			Remark
C324	1-164-232-11	CERAMIC CHIP	0.01uF		50V
C401	1-164-232-11	CERAMIC CHIP	0.01uF		50V
C402	1-164-232-11	CERAMIC CHIP	0.01uF		50V
C403	1-126-357-11	ELECT	150uF	20%	16V
C406	1-124-584-00	ELECT	100uF	20%	10V
C411	1-126-157-11	ELECT	10uF	20%	16V
C412	1-126-163-11	ELECT	4.7uF	20%	50V
C414	1-126-157-11	ELECT	10uF	20%	16V
C430	1-135-149-21	TANTALUM CHIP	2.2uF	20%	10V
C450	1-124-257-00	ELECT	2.2uF	20%	50V
C501	1-163-038-00	CERAMIC CHIP	0.1uF		25V
C502	1-164-232-11	CERAMIC CHIP	0.01uF		50V
C503	1-124-431-00	ELECT	33uF	20%	4V
C505	1-163-078-11	CERAMIC CHIP	0.033uF	10%	25V
C506	1-164-232-11	CERAMIC CHIP	0.01uF		50V
C507	1-135-070-00	TANTALUM CHIP	0.1uF	10%	35V
C508	1-163-038-00	CERAMIC CHIP	0.1uF		25V
C509	1-124-431-00	ELECT	33uF	20%	4V
C510	1-163-038-00	CERAMIC CHIP	0.1uF		25V
C511	1-164-232-11	CERAMIC CHIP	0.01uF		50V
C512	1-124-584-00	ELECT	100uF	20%	10V
C513	1-124-431-00	ELECT	33uF	20%	4V
C514	1-163-095-00	CERAMIC CHIP	12PF	5%	50V
C515	1-163-117-00	CERAMIC CHIP	100PF	5%	50V
C516	1-163-038-00	CERAMIC CHIP	0.1uF		25V
C517	1-163-038-00	CERAMIC CHIP	0.1uF		25V
C518	1-164-232-11	CERAMIC CHIP	0.01uF		50V
C519	1-163-038-00	CERAMIC CHIP	0.1uF		25V
C520	1-163-037-11	CERAMIC CHIP	0.022uF	10%	25V
C521	1-163-117-00	CERAMIC CHIP	100PF	5%	50V
C522	1-124-239-00	ELECT	6.8uF	20%	10V
C523	1-124-239-00	ELECT	6.8uF	20%	10V
C524	1-126-153-11	ELECT	22uF	20%	6.3V
C525	1-163-038-00	CERAMIC CHIP	0.1uF		25V
C527	1-163-081-00	CERAMIC CHIP	0.22uF		25V
C528	1-126-153-11	ELECT	22uF	20%	6.3V
C529	1-163-125-00	CERAMIC CHIP	220PF	5%	50V
C531	1-163-038-00	CERAMIC CHIP	0.1uF		25V
C532	1-163-038-00	CERAMIC CHIP	0.1uF		25V
C533	1-162-638-11	CERAMIC CHIP	1uF		16V
C534	1-163-038-00	CERAMIC CHIP	0.1uF		25V
C535	1-163-009-11	CERAMIC CHIP	0.001uF	10%	50V
C536	1-163-078-11	CERAMIC CHIP	0.033uF	10%	25V
C537	1-135-145-11	TANTALUM CHIP	0.47uF	10%	35V
C538	1-124-434-00	ELECT	220uF	20%	4V
C539	1-163-009-11	CERAMIC CHIP	0.001uF	10%	50V
C540	1-162-637-11	CERAMIC CHIP	0.47uF		16V
C543	1-135-148-21	TANTAL. CHIP	1.5uF	10%	10V
C544	1-135-174-11	TANTAL. CHIP	10uF	20%	10V
C546	1-163-986-00	CERAMIC CHIP	0.027uF	10%	25V
C547	1-162-638-11	CERAMIC CHIP	1uF		16V
C548	1-126-162-11	ELECT	3.3uF	20%	50V
C549	1-126-157-11	ELECT	10uF	20%	16V
C550	1-163-141-00	CERAMIC CHIP	0.001uF	5%	50V
C551	1-126-157-11	ELECT	10uF	20%	16V
C552	1-126-160-11	ELECT	1uF	20%	50V
C553	1-162-638-11	CERAMIC CHIP	1uF		16V
C554	1-162-637-11	CERAMIC CHIP	0.47uF		16V
C555	1-163-081-00	CERAMIC CHIP	0.22uF		25V
C556	1-163-010-11	CERAMIC CHIP	0.0012uF	10%	50V
C557	1-163-017-00	CERAMIC CHIP	0.0047uF	5%	50V
C558	1-163-038-00	CERAMIC CHIP	0.1uF		25V
C559	1-124-584-00	ELECT	100uF	20%	10V
C561	1-163-038-00	CERAMIC CHIP	0.1uF		25V
C562	1-162-638-11	CERAMIC CHIP	1uF		16V
C601	1-163-038-00	CERAMIC CHIP	0.1uF		25V
C602	1-163-095-00	CERAMIC CHIP	12PF	5%	50V
C603	1-163-095-00	CERAMIC CHIP	12PF	5%	50V
C604	1-164-234-11	CERAMIC CHIP	1uF		10V
C606	1-163-117-00	CERAMIC CHIP	100PF	5%	50V
C607	1-163-037-11	CERAMIC CHIP	0.022uF	10%	25V
C801	1-163-141-00	CERAMIC CHIP	0.001uF	5%	50V
C802	1-163-038-00	CERAMIC CHIP	0.1uF		25V
C803	1-135-149-21	TANTALUM CHIP	2.2uF	20%	10V
C804	1-124-257-00	ELECT	2.2uF	20%	50V
C805	1-163-109-00	CERAMIC CHIP	47PF	5%	50V
C806	1-163-109-00	CERAMIC CHIP	47PF	5%	50V
C807	1-164-232-11	CERAMIC CHIP	0.01uF		50V
C808	1-162-638-11	CERAMIC CHIP	1uF		16V
C809	1-135-149-21	TANTALUM CHIP	2.2uF	20%	10V
C810	1-162-638-11	CERAMIC CHIP	1uF		16V
C811	1-163-038-00	CERAMIC CHIP	0.1uF		25V
C812	1-162-637-11	CERAMIC CHIP	0.47uF		16V
C813	1-164-222-11	CERAMIC CHIP	0.22uF		25V
C901	1-126-154-11	ELECT	47uF	20%	6.3V

< CONNECTOR >

CN501	1-566-976-11	SOCKET, CONNECTOR 12P
CN502	1-565-309-11	CONNECTOR, FLEXIBLE 4P
CN801	1-563-589-11	CONNECTOR, FLEXIBLE 12P

< JACK >

CNJ401	1-562-961-11	JACK (DC IN 9V)

< DIODE >

D401	8-719-200-36	DIODE E10QS04
D402	8-719-106-22	DIODE RD7.5M-B1

Ref. No.	Part No.	Description	Remark
D409	8-719-938-75	DIODE SB05-05CP	
D418	8-719-105-90	DIODE RD5.6M-B1	
D501-503			
	8-719-938-72	DIODE SB01-05CP	
D504	8-719-106-53	DIODE RD10M-B2	
D505	8-719-400-18	DIODE MA152WK	
D507	8-719-400-18	DIODE MA152WK	
D601	8-719-400-18	DIODE MA152WK	
D801	8-719-951-22	DIODE IMN10	
D803	8-719-951-22	DIODE IMN10	
D804	8-719-400-18	DIODE MA152WK	
D805	8-719-106-71	DIODE RD12M-B2	
D806	8-719-938-72	DIODE SB01-05CP	
D807	8-719-400-18	DIODE MA152WK	
		< IC >	
IC301	8-759-805-34	IC CXD1161M-3	
IC302	8-759-630-75	IC M51568FP	
IC303	8-759-710-55	IC NJM2100M	
IC501	8-752-062-93	IC CXA1271Q-T4	
IC502	8-752-062-50	IC CXA1272Q-T6-Z	
IC503	8-759-970-89	IC BA10358F	
IC504	8-759-030-17	IC MPC1715FU	
IC505	8-759-031-84	IC SC7S04F	
IC601	8-752-341-93	IC CXD1167Q	
IC602	8-759-805-49	IC CXK5816MS-15L	
IC801	8-752-819-90	IC CXP5084-622Q	
IC802	8-759-981-65	IC LM2903M	
		< JACK >	
J301	1-569-240-11	JACK 1P (LINE OUT)	
J302	1-569-240-21	JACK 1P (PHONES)	
J801	1-569-240-31	JACK 1P (REMOTE)	
		< JUMPER RESISTOR >	
JR202	1-216-296-00	METAL CHIP 0 5% 1/8W	
JR307	1-216-295-00	METAL CHIP 0 5% 1/10W	
JR401	1-216-295-00	METAL CHIP 0 5% 1/10W	
JR402	1-216-296-00	METAL CHIP 0 5% 1/8W	
JR403	1-216-295-00	METAL CHIP 0 5% 1/10W	
JR406	1-216-296-00	METAL CHIP 0 5% 1/8W	
JR501	1-216-295-00	METAL CHIP 0 5% 1/10W	
JR502	1-216-296-00	METAL CHIP 0 5% 1/8W	
		< COIL >	
L402	1-412-032-11	INDUCTOR CHIP 100uH	
L403	1-412-031-11	INDUCTOR CHIP 47uH	
L501	1-412-029-11	INDUCTOR CHIP 10uH	
L502	1-412-039-51	INDUCTOR CHIP 100uH	

Ref. No.	Part No.	Description	Remark
L503	1-412-032-11	INDUCTOR CHIP 100uH	
L504	1-412-032-11	INDUCTOR CHIP 100uH	
L505	1-412-039-51	INDUCTOR CHIP 100uH	
L506	1-412-029-11	INDUCTOR CHIP 10uH	
		< LIQUID CRYSTAL DISPLAY >	
LCD1	1-808-793-11	DISPLAY PANEL, LIQUID CRYSTAL	
		< PILOT LAMP >	
PL901	1-518-585-11	LAMP, PILOT	
		< TRANSISTOR >	
Q302-305			
	8-729-141-75	TRANSISTOR 2SD596DV345	
Q409	8-729-216-21	TRANSISTOR 2SA1162-Y	
Q410	8-729-141-48	TRANSISTOR 2SB624-BV345	
Q412	8-729-800-37	TRANSISTOR 2SD1048-X7	
Q413	8-729-926-71	TRANSISTOR 2SB1308-R	
Q414	8-729-903-10	TRANSISTOR FMW1	
Q423	8-729-907-28	TRANSISTOR IMD3	
Q424	8-729-903-10	TRANSISTOR FMW1	
Q451	8-729-922-34	TRANSISTOR 2SD1758F5-QR	
Q453	8-729-140-75	TRANSISTOR 2SD999-CLCK	
Q501	8-729-216-21	TRANSISTOR 2SA1162-Y	
Q502	8-729-141-75	TRANSISTOR 2SD596DV345	
Q503	8-729-902-99	TRANSISTOR DTC114TK	
Q504	8-729-230-49	TRANSISTOR 2SC2712-YG	
Q506	8-729-903-29	TRANSISTOR DTA144TK	
Q507	8-729-903-30	TRANSISTOR DTC144TK	
Q801	8-729-901-05	TRANSISTOR DTA124EK	
Q802	8-729-141-75	TRANSISTOR 2SD596DV345	
Q803	8-729-907-28	TRANSISTOR IMD3	
Q804	8-729-141-75	TRANSISTOR 2SD596DV345	
Q901	8-729-140-75	TRANSISTOR 2SD999-CLCK	
Q902	8-729-902-99	TRANSISTOR DTC114TK	
		< RESISTOR >	
R101	1-216-329-11	METAL GLAZE 5.1K 1% 1/10W	
R102	1-216-336-11	METAL CHIP 47K 1% 1/10W	
R103	1-216-333-11	METAL CHIP 15K 1% 1/10W	
R104	1-218-160-11	METAL GLAZE 43K 1% 1/10W	
R105	1-216-602-11	METAL GLAZE 6.8K 1% 1/10W	
R106	1-216-333-11	METAL CHIP 15K 1% 1/10W	
R107	1-216-063-00	METAL CHIP 3.9K 5% 1/10W	
R108	1-216-053-00	METAL CHIP 1.5K 5% 1/10W	
R109	1-216-077-00	METAL CHIP 15K 5% 1/10W	
R110	1-216-009-00	METAL CHIP 22 5% 1/10W	
R111	1-216-073-00	METAL CHIP 10K 5% 1/10W	

MAIN

Ref. No.	Part No.	Description			Remark
R112	1-216-033-00	METAL CHIP	220	5%	1/10W
R114	1-216-053-00	METAL CHIP	1.5K	5%	1/10W
R115	1-216-073-00	METAL CHIP	10K	5%	1/10W
R116	1-216-097-00	METAL CHIP	100K	5%	1/10W
R117	1-216-073-00	METAL CHIP	10K	5%	1/10W
R201	1-216-329-11	METAL GLAZE	5.1K	1%	1/10W
R202	1-216-336-11	METAL CHIP	47K	1%	1/10W
R203	1-216-333-11	METAL CHIP	15K	1%	1/10W
R204	1-218-160-11	METAL GLAZE	43K	1%	1/10W
R205	1-216-602-11	METAL GLAZE	6.8K	1%	1/10W
R206	1-216-333-11	METAL CHIP	15K	1%	1/10W
R207	1-216-063-00	METAL CHIP	3.9K	5%	1/10W
R208	1-216-053-00	METAL CHIP	1.5K	5%	1/10W
R209	1-216-077-00	METAL CHIP	15K	5%	1/10W
R210	1-216-009-00	METAL CHIP	22	5%	1/10W
R211	1-216-073-00	METAL CHIP	10K	5%	1/10W
R212	1-216-182-00	METAL GLAZE	220	5%	1/8W
R214	1-216-053-00	METAL CHIP	1.5K	5%	1/10W
R215	1-216-073-00	METAL CHIP	10K	5%	1/10W
R216	1-216-097-00	METAL CHIP	100K	5%	1/10W
R217	1-216-073-00	METAL CHIP	10K	5%	1/10W
R303	1-216-121-00	METAL CHIP	1M	5%	1/10W
R327	1-216-057-00	METAL CHIP	2.2K	5%	1/10W
R328	1-216-057-00	METAL CHIP	2.2K	5%	1/10W
R419	1-216-045-00	METAL CHIP	680	5%	1/10W
R420	1-216-041-00	METAL CHIP	470	5%	1/10W
R421	1-216-092-00	METAL GLAZE	62K	5%	1/10W
R422	1-216-067-00	METAL CHIP	5.6K	5%	1/10W
R423	1-216-045-00	METAL CHIP	680	5%	1/10W
R424	1-216-081-00	METAL CHIP	22K	5%	1/10W
R425	1-216-049-00	METAL CHIP	1K	5%	1/10W
R426	1-216-033-00	METAL CHIP	220	5%	1/10W
R427	1-216-056-00	METAL GLAZE	2K	5%	1/10W
R428	1-216-062-00	METAL CHIP	3.6K	5%	1/10W
R429	1-216-095-00	METAL CHIP	82K	5%	1/10W
R430	1-216-061-00	METAL CHIP	3.3K	5%	1/10W
R431	1-216-073-00	METAL CHIP	10K	5%	1/10W
R437	1-216-686-11	METAL CHIP	30K	0.5%	1/10W
R438	1-216-053-00	METAL CHIP	1.5K	5%	1/10W
R439	1-216-694-11	METAL CHIP	62K	0.5%	1/10W
R446	1-216-009-00	METAL CHIP	22	5%	1/10W
R448	1-216-041-00	METAL CHIP	470	5%	1/10W
R480	1-216-025-00	METAL CHIP	100	5%	1/10W
R483	1-216-049-00	METAL CHIP	1K	5%	1/10W
R484	1-216-025-00	METAL CHIP	100	5%	1/10W
R485	1-216-089-00	METAL GLAZE	47K	5%	1/10W
R501	1-216-029-00	METAL CHIP	150	5%	1/10W
R502	1-216-069-00	METAL CHIP	6.8K	5%	1/10W
R503	1-216-049-00	METAL CHIP	1K	5%	1/10W

Ref. No.	Part No.	Description			Remark
R504	1-216-073-00	METAL CHIP	10K	5%	1/10W
R506	1-216-081-00	METAL CHIP	22K	5%	1/10W
R508	1-216-069-00	METAL CHIP	6.8K	5%	1/10W
R509	1-216-077-00	METAL CHIP	15K	5%	1/10W
R510	1-216-073-00	METAL CHIP	10K	5%	1/10W
R511	1-216-146-00	METAL GLAZE	6.8	5%	1/8W
R512	1-216-085-00	METAL CHIP	33K	5%	1/10W
R513	1-216-073-00	METAL CHIP	10K	5%	1/10W
R514	1-216-073-00	METAL CHIP	10K	5%	1/10W
R515	1-216-097-00	METAL CHIP	100K	5%	1/10W
R516	1-216-121-00	METAL CHIP	1M	5%	1/10W
R517	1-216-093-00	METAL CHIP	68K	5%	1/10W
R518	1-216-097-00	METAL CHIP	100K	5%	1/10W
R519	1-216-119-00	METAL CHIP	820K	5%	1/10W
R520	1-216-089-00	METAL GLAZE	47K	5%	1/10W
R521	1-216-095-00	METAL CHIP	82K	5%	1/10W
R522	1-216-081-00	METAL CHIP	22K	5%	1/10W
R523	1-216-059-00	METAL CHIP	2.7K	5%	1/10W
R524	1-216-089-00	METAL GLAZE	47K	5%	1/10W
R525	1-216-097-00	METAL CHIP	100K	5%	1/10W
R526	1-216-114-00	METAL GLAZE	510K	5%	1/10W
R528	1-216-077-00	METAL CHIP	15K	5%	1/10W
R529	1-216-686-11	METAL CHIP	30K	0.5%	1/10W
R530	1-216-686-11	METAL CHIP	30K	0.5%	1/10W
R531	1-216-059-00	METAL CHIP	2.7K	5%	1/10W
R532	1-216-103-00	METAL GLAZE	180K	5%	1/10W
R533	1-216-062-00	METAL CHIP	3.6K	5%	1/10W
R534	1-216-121-00	METAL CHIP	1M	5%	1/10W
R536	1-216-099-00	METAL CHIP	120K	5%	1/10W
R537	1-216-083-00	METAL CHIP	27K	5%	1/10W
R538	1-216-094-00	METAL GLAZE	75K	5%	1/10W
R539	1-216-094-00	METAL GLAZE	75K	5%	1/10W
R540	1-216-086-00	METAL GLAZE	36K	5%	1/10W
R544	1-216-077-00	METAL CHIP	15K	5%	1/10W
R545	1-216-121-00	METAL CHIP	1M	5%	1/10W
R546	1-216-065-00	METAL CHIP	4.7K	5%	1/10W
R547	1-216-057-00	METAL CHIP	2.2K	5%	1/10W
R548	1-216-057-00	METAL CHIP	2.2K	5%	1/10W
R549	1-216-065-00	METAL CHIP	4.7K	5%	1/10W
R550	1-216-049-00	METAL CHIP	1K	5%	1/10W
R551	1-216-049-00	METAL CHIP	1K	5%	1/10W
R552	1-216-081-00	METAL CHIP	22K	5%	1/10W
R553	1-216-049-00	METAL CHIP	1K	5%	1/10W
R554	1-216-033-00	METAL CHIP	220	5%	1/10W
R555	1-216-081-00	METAL CHIP	22K	5%	1/10W
R556	1-216-073-00	METAL CHIP	10K	5%	1/10W
R557	1-216-049-00	METAL CHIP	1K	5%	1/10W
R558	1-216-073-00	METAL CHIP	10K	5%	1/10W
R559	1-216-065-00	METAL CHIP	4.7K	5%	1/10W

Ref. No.	Part No.	Description			Remark
R560	1-216-129-00	METAL CHIP	2.2M	5%	1/10W
R561	1-216-065-00	METAL CHIP	4.7K	5%	1/10W
R562	1-216-097-00	METAL CHIP	100K	5%	1/10W
R563	1-216-121-00	METAL CHIP	1M	5%	1/10W
R564	1-216-105-00	METAL CHIP	220K	5%	1/10W
R601	1-216-097-00	METAL CHIP	100K	5%	1/10W
R602	1-216-089-00	METAL GLAZE	47K	5%	1/10W
R801	1-216-089-00	METAL GLAZE	47K	5%	1/10W
R802	1-216-238-00	METAL GLAZE	47K	5%	1/8W
R803	1-216-109-00	METAL CHIP	330K	5%	1/10W
R804	1-216-041-00	METAL CHIP	470	5%	1/10W
R806	1-216-089-00	METAL GLAZE	47K	5%	1/10W
R807	1-216-073-00	METAL CHIP	10K	5%	1/10W
R808	1-216-053-00	METAL CHIP	1.5K	5%	1/10W
R809	1-216-059-00	METAL CHIP	2.7K	5%	1/10W
R810	1-216-071-00	METAL CHIP	8.2K	5%	1/10W
R811-813					
	1-216-077-00	METAL CHIP	15K	5%	1/10W
R818	1-216-097-00	METAL CHIP	100K	5%	1/10W
R819	1-216-121-00	METAL CHIP	1M	5%	1/10W
R820	1-216-298-00	METAL CHIP	2.2	5%	1/10W
R901	1-216-089-00	METAL GLAZE	47K	5%	1/10W
R902	1-216-049-00	METAL CHIP	1K	5%	1/10W
		< VARIABLE RESISTOR >			
RV301	1-230-485-11	RES, VAR, CARBON 10K/10K (VOLUME)			
RV401	1-238-599-11	RES, ADJ, CARBON 4.7K			
RV501	1-237-744-11	RES, ADJ, CARBON 50K			
RV502	1-230-526-11	RES, ADJ, METAL 47K			
RV503	1-238-601-11	RES, ADJ, CARBON 22K			
RV504	1-230-526-11	RES, ADJ, METAL 47K			
RV505	1-238-597-11	RES, ADJ, CARBON 1K			
		< SWITCH >			
S401	1-554-843-11	SWITCH, SLIDE (HOLD/RESUME)			
		< VIBRATOR >			
X601	1-567-737-11	VIBRATOR, CRYSTAL (16.9344MHz)			
X801	1-577-064-11	VIBRATOR, CHIP CERAMIC (3.58MHz)			

****

9-953-927-82

Sony Corporation
General Audio Group

English
93K0488-1
Printed in Japan

Published by Audio Sector Quality Assurance Dept.