# D-202/202A

# SERVICE MANUAL


*US Model*
*Canadian Model*
*UK Model*
*E Model*
*Australian Model*
D-202
*AEP Model*
D-202/202A

| Model Name Using Similar Mechanism | NEW |
|---|---|
| CD Mechanism Name | KSM-330AAN |

## SPECIFICATIONS

System: Compact disc digital audio system

Laser diode properties: Material: GaAlAs
Wavelength: λ = 780 nm
Emission duration: Continuous
Laser output: Less than 44.6 μW
(This output is the value measured at a distance of 200 mm from the objective lens surface on the Optical Pick-up Block.)

Error correction: Sony Super Strategy Cross Interleave Read Solomon Code D-A conversion 16-bit linear 8fs digital filter

Frequency response: 20 - 20,000 Hz $\pm\frac{1}{3}$ dB
(measured by EIAJ CP-307)

Output (at 6 V input level): Line output (stereo minijack)
Output level 0.55 V rms at 50 kilohms
Load impedance over 10 kilohms
Headphones (stereo minijack)
9 mW + 9 mW at 16Ω

**General**

Power requirements: Supplied:
- DC 2.4 V Rechargeable battery pack BP-DM1
- DC IN 6 V jack accepts the Sony AC power adaptor (supplied)

| Where purchased | Operating voltage |
|---|---|
| European countries | 220 V AC, 50 Hz |
| Canada | 120 V AC, 60 Hz |
| Other countries | 100 - 240 V AC, 50/60 Hz |

Not supplied:
- DC IN 6 V accepts the Sony CPM-203P/CPM-200P mount plate and CPM-200PK/CPM-203PK Car mount arm for use on 12 V car battery.
- DC 3 V two size AA (LR6) alkaline batteries

Power consumption: 1.4 W DC

Dimensions: Approx. 132.3 × 26.8 × 150.1 mm ($5\frac{1}{4} \times 1\frac{1}{16} \times 6$ in.) (w/h/d) incl. projecting parts and controls

Weight: Approx. 320 g (11.3 oz.) incl. rechargeable battery

Supplied accessories: AC power adaptor (1)
Rechargeable battery (1)
Connecting cord (phono plug × 2 ↔ stereo miniplug (1)
Stereo headphones (1)
Car mount adaptor (1)

Design and specifications subject to change without notice.

**CAUTION**

Use of controls or adjustments or performance of procedures other than those specified herein may result in hazardous radiation exposure.

**For the Customers in European Countries**

CLASS 1 LASER PRODUCT
LUOKAN 1 LASERLAITE
KLASS 1 LASERAPPARAT

**This Compact Disc player is classified as a CLASS 1 LASER product. The CLASS 1 LASER PRODUCT label is located on the bottom exterior.**

# COMPACT DISC COMPACT PLAYER

# SONY®

# TABLE OF CONTENTS



**SAFETY-RELATED COMPONENT WARNING!!**

**COMPONENTS IDENTIFIED BY MARK ⚠ OR DOTTED LINE WITH MARK ⚠ ON THE SCHEMATIC DIAGRAMS AND IN THE PARTS LIST ARE CRITICAL TO SAFE OPERATION. REPLACE THESE COMPONENTS WITH SONY PARTS WHOSE PART NUMBERS APPEAR AS SHOWN IN THIS MANUAL OR IN SUPPLEMENTS PUBLISHED BY SONY.**

**ATTENTION AU COMPOSANT AYANT RAPPORT À LA SÉCURITÉ!**

**LES COMPOSANTS IDENTIFIÉS PAR UNE MARQUE ⚠ SUR LES DIAGRAMMES SCHÉMATIQUES ET LA LISTE DES PIÈCES SONT CRITIQUES POUR LA SÉCURITÉ DE FONCTIONNEMENT. NE REMPLACER CES COMPOSANTS QUE PAR DES PIÈCES SONY DONT LES NUMÉROS SONT DONNÉS DANS CE MANUEL OU DANS LES SUPPLÉMENTS PUBLIÉS PAR SONY.**

# SECTION 1
# GENERAL

This section is extracted from instruction manual.

## Location and Function of Controls

See the pages in ( ) for more details.

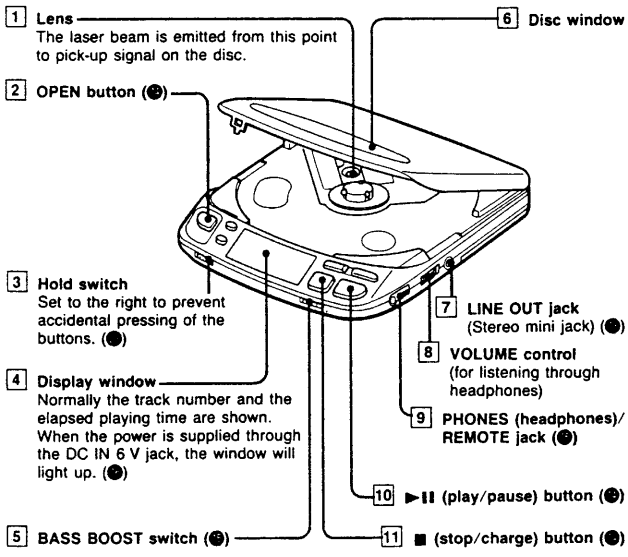


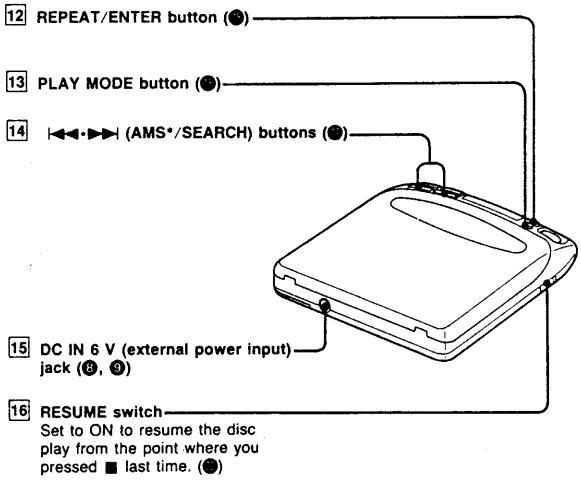


*AMS is the abbreviation of Automatic Music Sensor.





# SECTION 2
# SERVICING NOTES

### NOTES ON HANDLING THE OPTICAL PICK-UP BLOCK OR BASE UNIT

The laser diode in the optical pick-up block may suffer electrostatic breakdown because of the potential difference generated by the charged electrostatic load, etc. on clothing and the human body.
During repair, pay attention to electrostatic breakdown and also use the procedure in the printed matter which is included in the repair parts.
The flexible board is easily damaged and should be handled with care.

### Before Replacing the Optical Block

Please be sure to check thoroughly the parameters as par the "Optical Block Checking Procedures" (Part No. : 9-960-027-11) issued separately before replacing the optical block.
Note and specifications required to check are given below.

- FOK output : IC801 ㊿ pin
- S carve P-to-P value : 2.5Vp-p
  When checking FOK and S carve P-to-P value, remove the lead wire to disc motor and unsolder and open IC801 ㊿ pin.
- Adjusted part for focus gain adjustment : RV505
- RF signal P-to-P value : 0.85 – 1.35Vp-p
- Traverse signal P-to-P value : 2Vp-p
- The grating holder can not repair.
- Adjusted part for tracking gain adjustment : RV501

### Flexible Circuit Board Repairing

- Keep the temperature of the soldering iron around 270℃ during repairing.
- Do not touch the soldering iron on the same conductor of the circuit board (within 3 times).
- Be careful not to apply force on the conductor when soldering or unsoldering.

Notes on chip component replacement

- Never reuse a disconnected chip component.
- Notice that the minus side of a tantalum capacitor may be damaged by heat.

## NOTES ON LASER DIODE EMISSION CHECK

The laser beam on this model is concentrated so as to be focused on the disc reflective surface by the objective lens in the optical pick-up block. Therefore, when checking the laser diode emission, observe more than 30cm away from the objective lens.

### Laser Diode Check Procedure

The laser diode on this set will not emit unless the top panel is closed and S809 (leaf SW type) is turned on. The laser diode will always emit even if focus search is not performed in service mode.
The laser diode if checked using the current value which flows to the laser diode inside the optical pick-up.

**Procedure 1 (service mode or normal operation)**

Check the laser diode emission with the eye.

1. Open top panel.
2. S809 on as Fig. 1.
   (In service mode, this operation is not necessary.)
3. Observe the objective lens and confirm that the laser diode goes on about 2.5 seconds due to focus search. If it does not, APC circuit or the optical pick-up is defective.

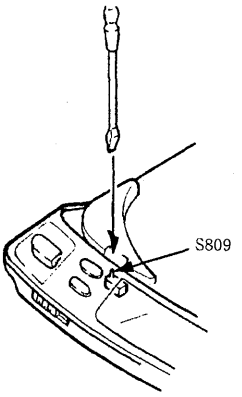


Fig. 1 Turning S809 Connection

**Procedure 2 (service mode or normal operation)**

Check by the current with flows in the laser diode.

1. Open the top panel.
2. Remove the main board and read the current value on the label affixed to the optical pick-up.

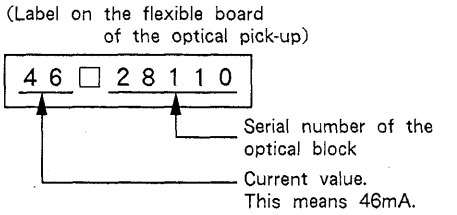


The current value varies with the set.

3. Connect a VOM as shown in Fig. 2.(both side of R510 : 10 Ω)
4. Press the ▶II key.
5. Calculate the current by the VOM reading.
   VOM reading (V) ÷10=current (A)
   ex. VOM reading=0.46V
   0.46÷10=0.046 (A) =46 (mA)
6. Confirm that the ammeter reading is within the range given below.
   value on label$^{+5}_{-11}$ mA (25℃)
   variation relative to temperature : 0.4mA/℃
   ( Current increases when temperature rises and decreases when it drops.)
   If the value is more than the range given, diode has deteriorated. If it is less, APC circuit or the optical pick-up is defective.

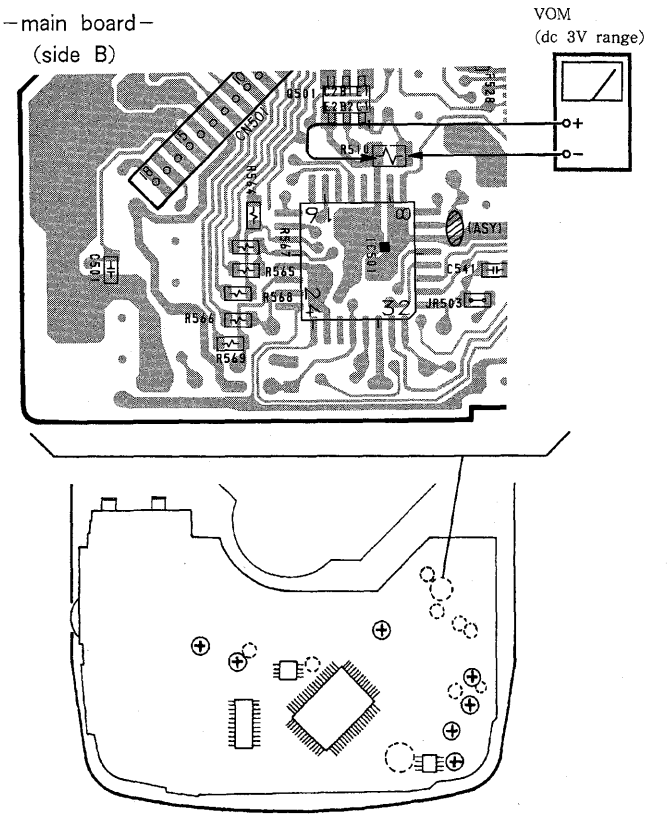


Fig. 2 VOM Connection

## SERVICE MODE (service program)

This set has built-in service program in the microcomputer as usual sets.
The operation method of service program is explained below.

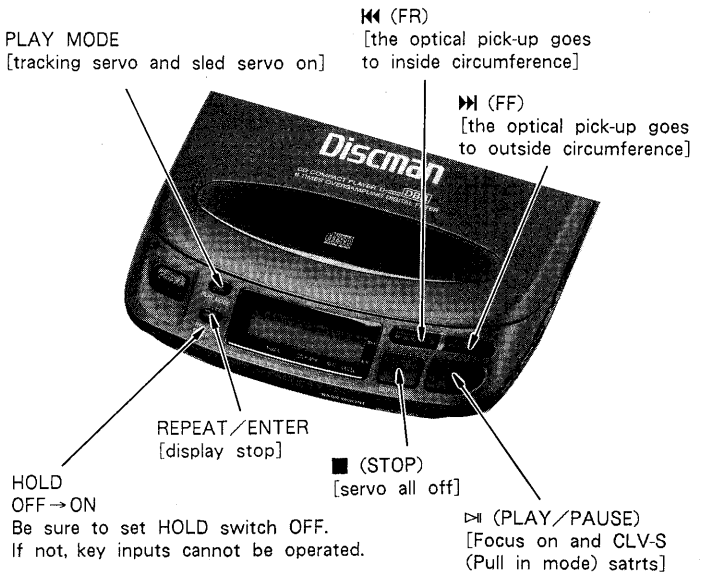


[ ] : Main operation in service mode
for details, refer to step 2.

**Fig. 3 Key Positions**

**• Step 1 (Service Mode setting method)**

1. Turn the HOLD switch to OFF with the external power supply not plugged in (no power applied to set)
2. Solder to connect the TEST terminal and the OPEN terminal (S809). (IC801 pin㊹ (TEST) pin is grounded.)
3. Connect the external power source while pressing the ▷II key.
   After preforming the above procedures, the set is switched to service mode.

**• Step 2 (Service Mode operation)**

1. When service mode is set, the display will change 6 times, and those 6 changes will be repeated over and over.
   With this the LCD display should be present in service mode. Even if LCD dose not display, other operations will be perfoemed.
2. When ⏭ or ⏮ key is pressed, the optical pick-up moves to the inside or outside circumference. Tracking servo and sled servo go off when this is done, so press ▶II key to turn on the tracking servo if necessary.
3. When REPEAT／ENTER key is pressed, the display stops.
   When REPEAT／ENTER key is released, the display continues to change.
   This allows check of each segment.
4. When ▶II key is pressed, CLV-S (pull-in mode) starts while performing focus search. When there is no disc nstalled, focus search is repeated several times while disc motor is rotating.
5. When ▶II key is pressed, tracking servo, sled servo and CLV-A (servo during PLAY) go ON.
6. When performing steps 4 and 5, the set starts to play. There is no muting in the service mode.
7. All servo (focus, tracking, sled and spindle) go off when ■ key is pressed. But disc motor continues rotating for a while by inartia.

**• Step 3 (Service Mode release)**

1. First be sure to unplug the external power supply, then remove the TEST terminal and the OPEN terminal solder jumper.
2. The set will now operated normally.

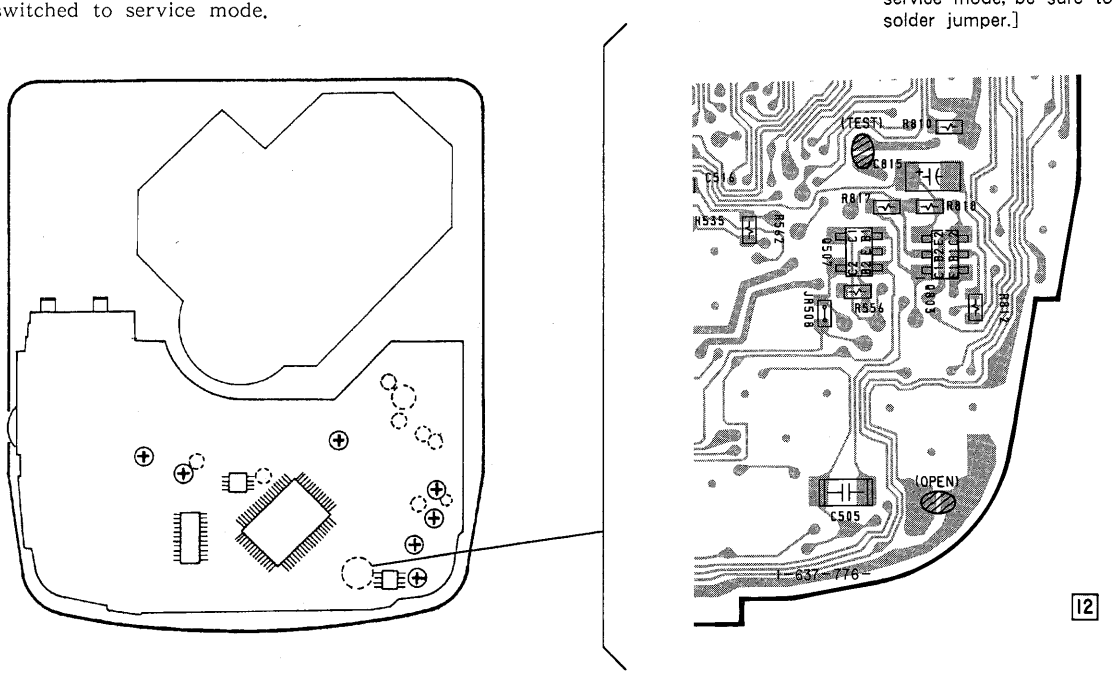

# SECTION 3
# ELECTRICAL ADJUSTMENTS

### Notes on Adjustment

1. Perform adjustments except for RECHARGEABLE VOLTAGE ADJUSTMENT in service mode.
   Be sure to release service mode after completing adjustment.
   (Refer to "Service Mode (service program)" on page 5.)
2. Perform adjustments in the order given.
3. Use YEDS-18 disc (part No. : 3-702-101-01) unless otherwise indicated.
4. Power supply voltage : DC 6V
   HOLD switch : OFF
   VOLUME knob : Minimum
   BASS BOOST switch : NORM

### PREPARATION

Put the set into service mode (See page 5.) and perform the following checks. Repair if there are any abnormalities.

**• Sled Motor Check**

1. Press the OPEN button and open the top panel.
2. Press the ⏭, ⏮ keys and make sure that the optical pick-up moves smoothly, without catching, from the inmost → outmost → inmost circumference.
   ⏭ : The optical pick-up moves outward
   ⏮ : The optical pick-up moves inward

**• Focus Search Check**

1. Press the OPEN button and open the top panel.
2. Press the ▶II key. (Focus search is performed continuously.) *
3. Observe the optical pick-up objective lens and check that it moves smoothly up and down with no catching or noises.
4. Press the ■ key.
   Check that focus search operation stops. If it does not, stop press the ■ key again longer than before.

* : In case of IC801 CXP5086-639Q (after the serial number 75,000), the focus search (searching function without a disc loaded) in the service mode is irregular due to a microcomputer bug. Please pay attention to that.

### VC (1／2Vcc) Connecting Point

FOCUS BIAS ADJUSTMENT
TRACKING BALANCE ADJUSTMENT

When the adjustments above are performed, connect the ⊖ side of oscilloscope to the point below.

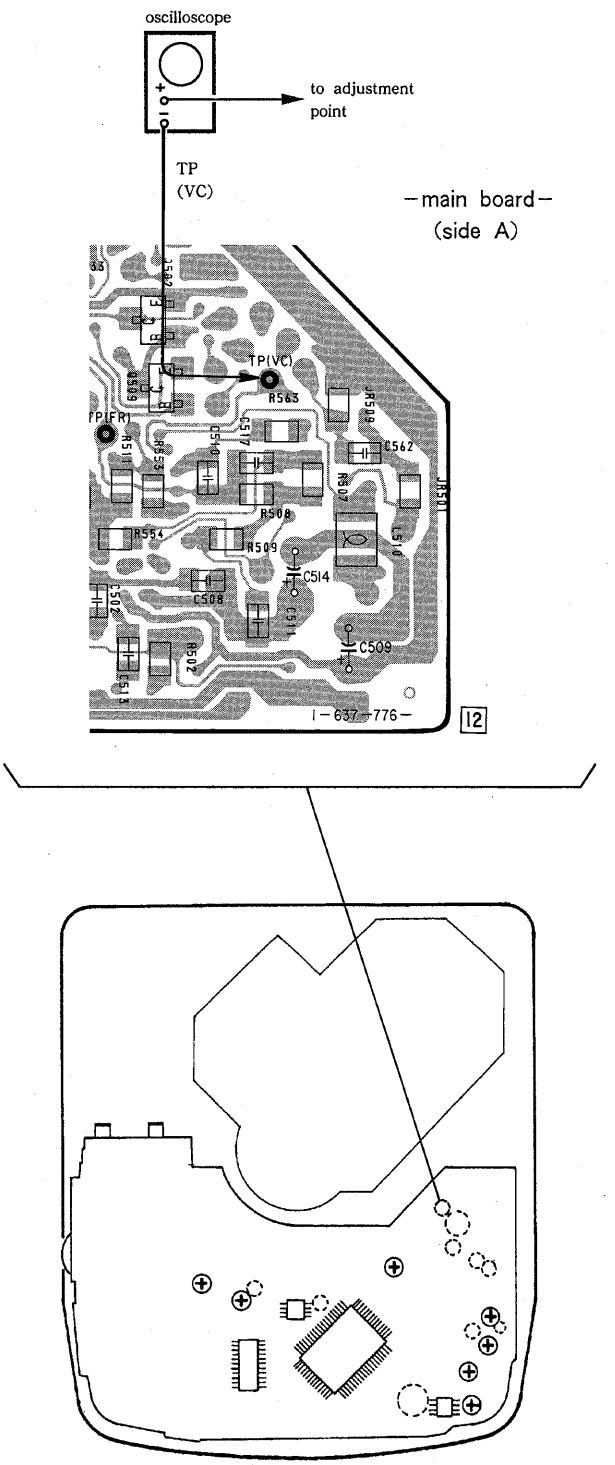

## +3.5V Adjustment

* Perform the +3.5V adjustment after applyig 2V from the battery terinal.

**Adjustment Procedure :**

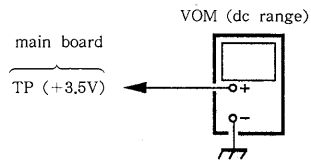


1. Connect the VOM to main board TP (+3.5V)
2. Adjust RV401 for 3.50V−3.55V reading on the VOM.

**Adjustment Location :** main board (side A)

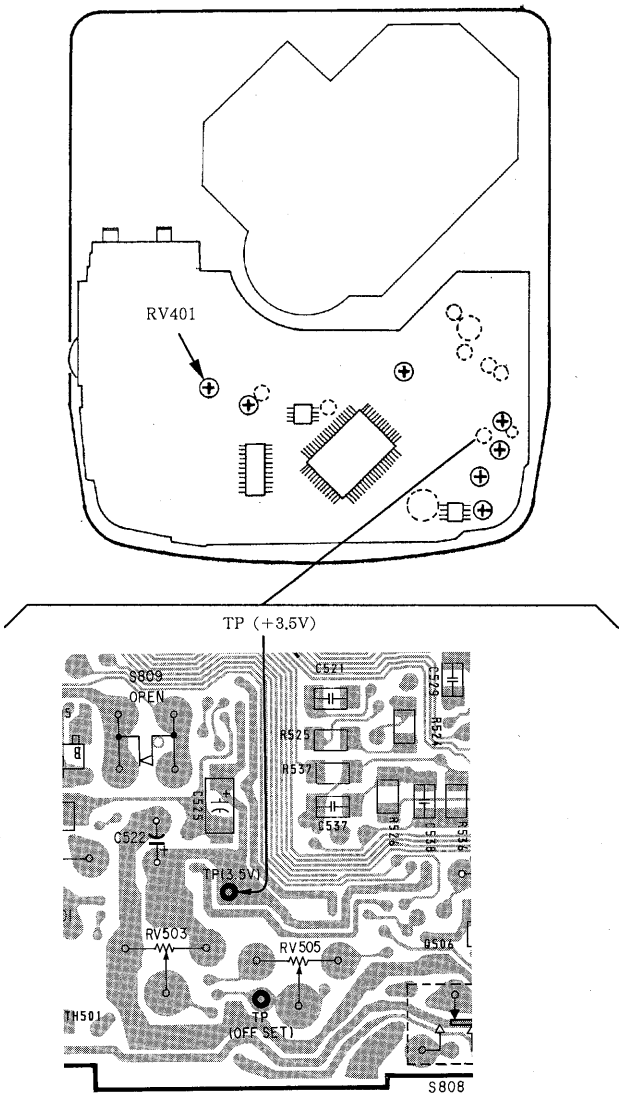


## Recharging Detection Voltage Adjustment

**Adjustment Procedure :**

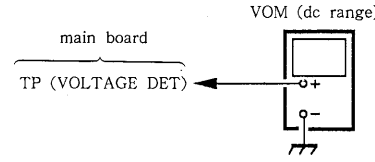


1. Oprate the service mode with 6V, and make sure that a current of Q407 (B) flows to the GND.
2. Connect a tester to TP (recharging detection) of the main board. (Connect a load resistor of 4 Ω and apply approximately 2.98−2.99V DC from the battery terminal.)
3. Adjust RV801 with a tester so that the difference of V1 and V2 becomes within the standard value. (Load resistance : 4 Ω

Standard value : V1−V2=±10mV
V1 : Voltage between IC801 ⑤ pin and GND.
V2 : Voltage between IC801 ⑥ pin and GND.

**Adjustment Location :** main board (side A)

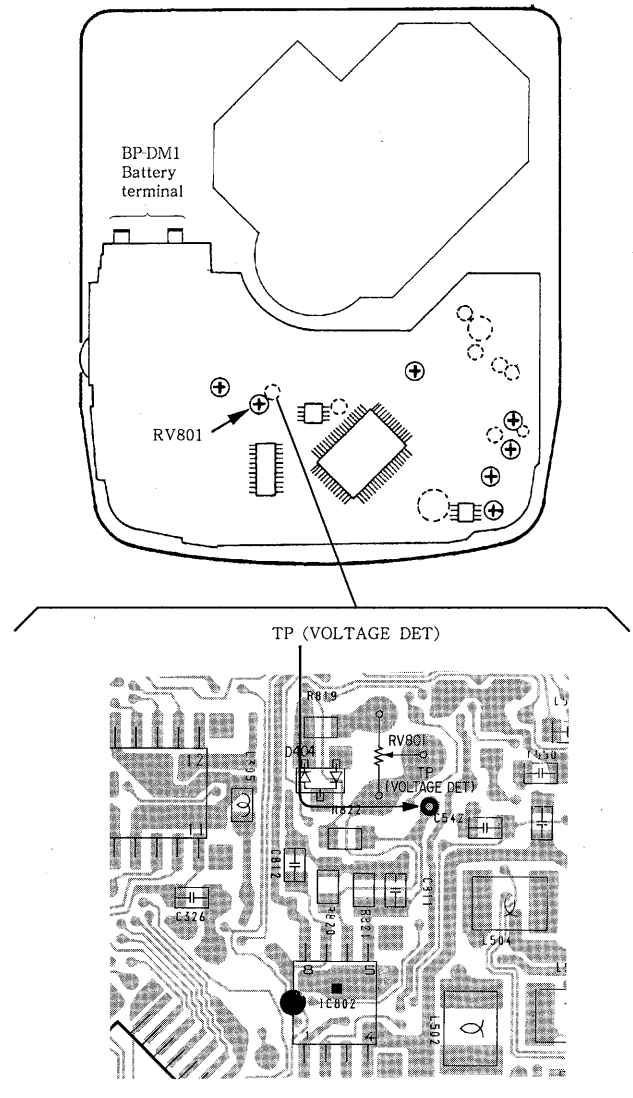

## PLL Free Run Frequency Check and Adjustment

**Check／Adjustment Procedure :**

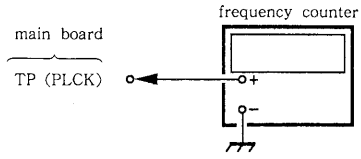


1. Short-circuit the jumper terminal of IC501 ⑦pin (ASY) to GND.
2. Connect a frequency counter to main board test point TP (PLCK).
3. Put the set into service mode stop state (see page 5).
4. Check that the frequency counter reading is 4.3218±0.01MHz.
   If not, adjust RV504 so that it is 4.3218±0.01MHz.
5. After adjustment, release service mode (see page 5).
6. Short the jumper point disconnected in step 1.

**Check／Adjustment Location :** main board

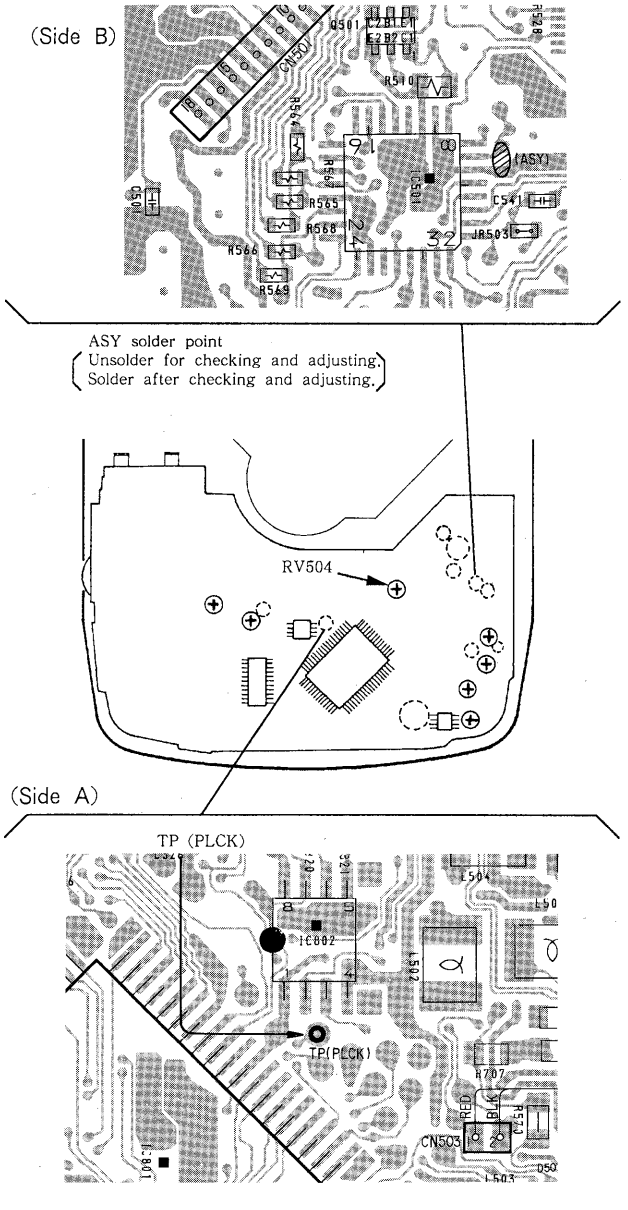


## Tracking Balance Adjustment

**Conditions :**

The set should be placed either horizontally.

**Adjustment Procedure :**

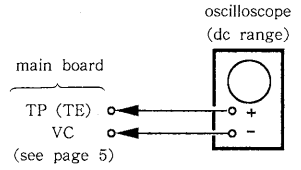


1. Connect the oscilloscope to main board TP (TE).
2. Put the set into service mode stop state (See page 5).
3. Press the ⏭ and ⏮ keys to move the optical pick-up to the center.
4. Insert the disc (YEDS-18) and close the top panel.
5. Press the ⏯ key.
   (It will go from focus search to focus on, and CLV pull-in mode state. Tracking and sled are OFF.)
6. Adjust RV502 so that the oscilloscope wavaform is symmetrical on the top and bottom in relation to 0V.

**Note :** Take sweep time as long as possible to obtain best wave-form.

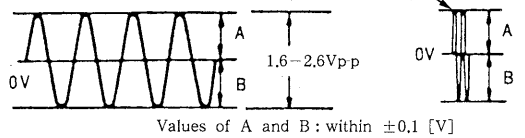


Values of A and B : within ±0.1 [V]

7. Press the ■ key to stop spindle motor from rotaing.
8. After adjustment, release service mode (see page 5).

**Adjustment Location :** main board (side B)

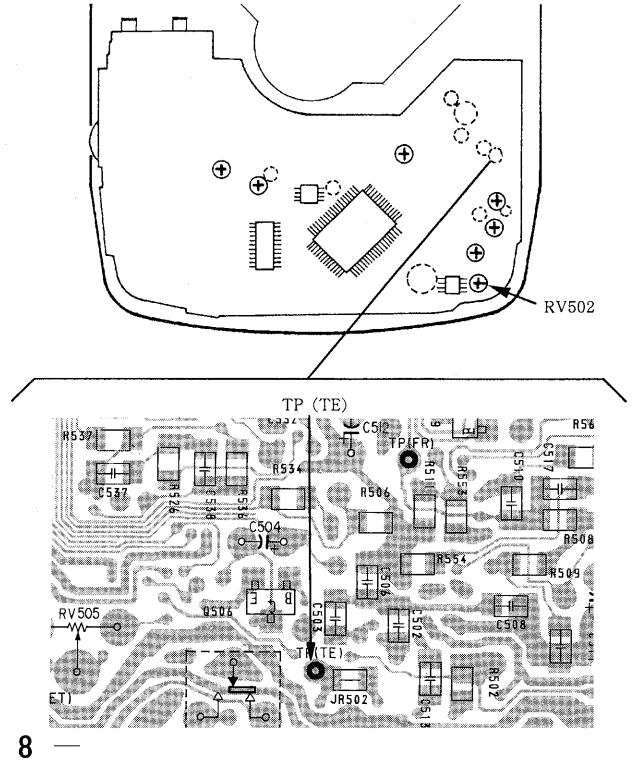

## Focus Bias Adjustment

**Conditions :**

The set should be placed either horizontally.

**Adjustment Procedure :**

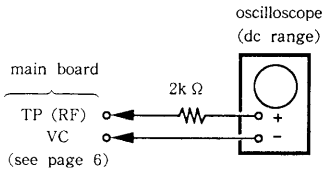


1. Put the set into STOP state in service mode (See page 5).
2. Connect the oscilloscope to main board test point TP (RF).
3. Press the ⏭ and ⏮ key to move the optical pick-up to the center.(Move the optical pick-up to the music area on the disc to enable easy visibility of the eye pattern).
4. Insert the disc (YEDS-18) and close the top panel.
5. Press the ▶II key.
   (It will go from focus search to focus on, and CLV pull-in mode state. Tracking and sled are OFF.)
6. Press the ▶II key.(Tracking and sled go ON.)
7. Adjust RV503 so that the oscilloscope waveform eye pattern is good. A good eye pattern means that the diamond shape (◇) in the center of the waveform can be clearly distinguished.

**• RF Signal Reference Waveform (eye pattern)**

VOLT/DIV : 200mV
TIME/DIV : 500nS

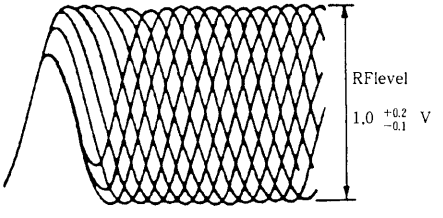


When observing the eye pattern, set the oscilloscope for AC range and raise vertical sensitivity.

8. Measure the voltage of pin㊽TP (OFF SET) of IC502. Readjust RV503 according to the voltage range.
   +70mV — +25mV : → +70mV
   +24mV — −20mV : → −20mV
9. Press the ■ key to stop spindle from rotating.
10. After adjustment, release service mode (see psge 5).

**Adjustment Procedure :** main board (side A)

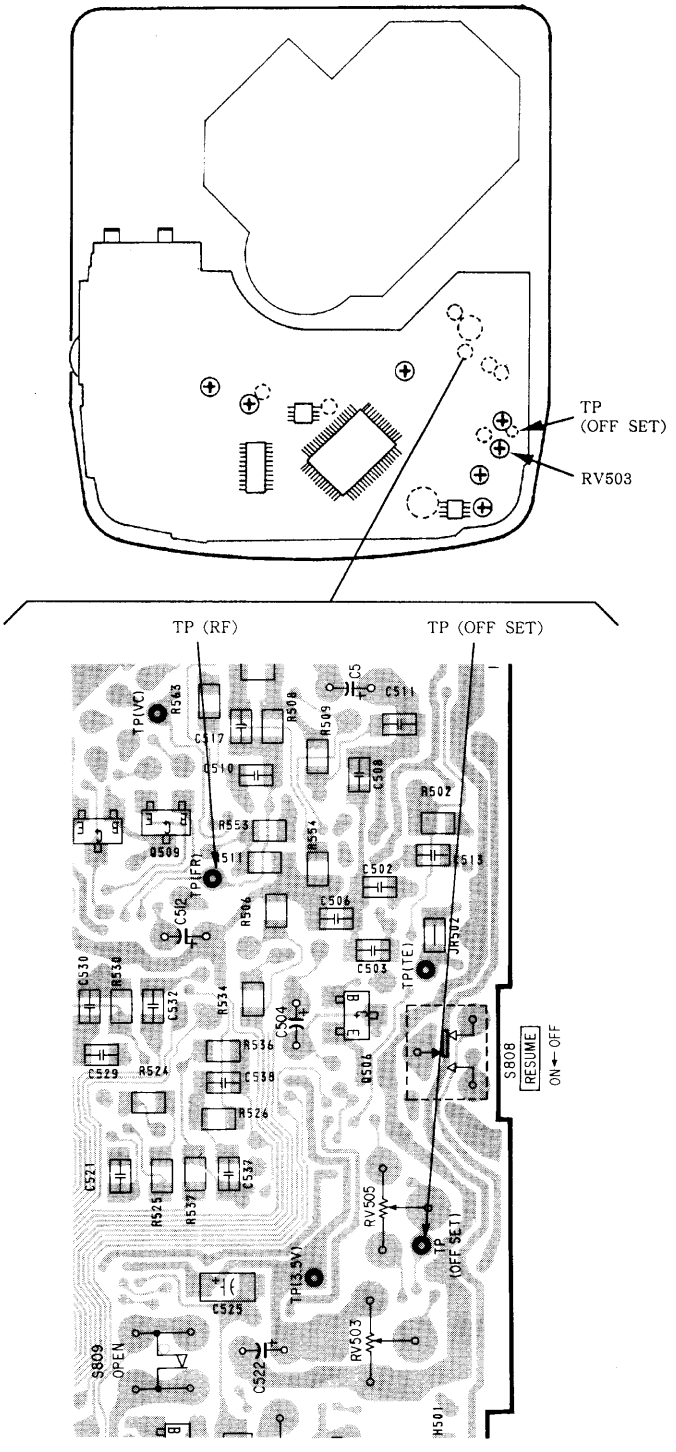

**Reference**

## Focus/Tracking Gain Adjustment

A frequency responce analyzer or CD jig is necessary in order to perform this adjustment exactly.

> However, this gain has a margin, so even if it is slightly off, there is no problem. Therefore, do not perfrom this adjustment.

Focus/tracking gain determines the pick-up followup (vertical and horizontal) relative to mechanical noise and mechanical shock when the 2-axis device operate. However, as these reciprocate, the adjustment is at the point where both are satisfied.

- When gain is high, the noise when the 2-axis device operates increases.
- When gain is low, it is more susceptible to mechanical shock and skipping occurs more easily.

This adjustment is to be performed when replacing the following parts :

- optical pick-up block
- RV501 (tracking gain volume)
- RV505 (focus gain volume)

Be careful not to move RV505 (focus gain volume) and RV501 (tracking gain volume) ordinarily.

> On this set, it is very difficult to simplify this adjustment. For those sets on which symptoms such as "occasional skipping" are hard to discover, or it is hard to tell if the set has been repaired, use the CD jig and perform this adjustment. Refer to the diagram below for connection of the CD jig. The adjustment procedure is described in the separate CD Jig Instruction Manual.

**CD Jig Connection Procedure :**

Remove the two jumpers of JR502 and JR503 and connect the cord to the CD jig as shown in the figure below. At this time, connect the cord of the IC501 side to the output terminal for the CD jig and connect the volume side cords to the input terminal from the CD jig.

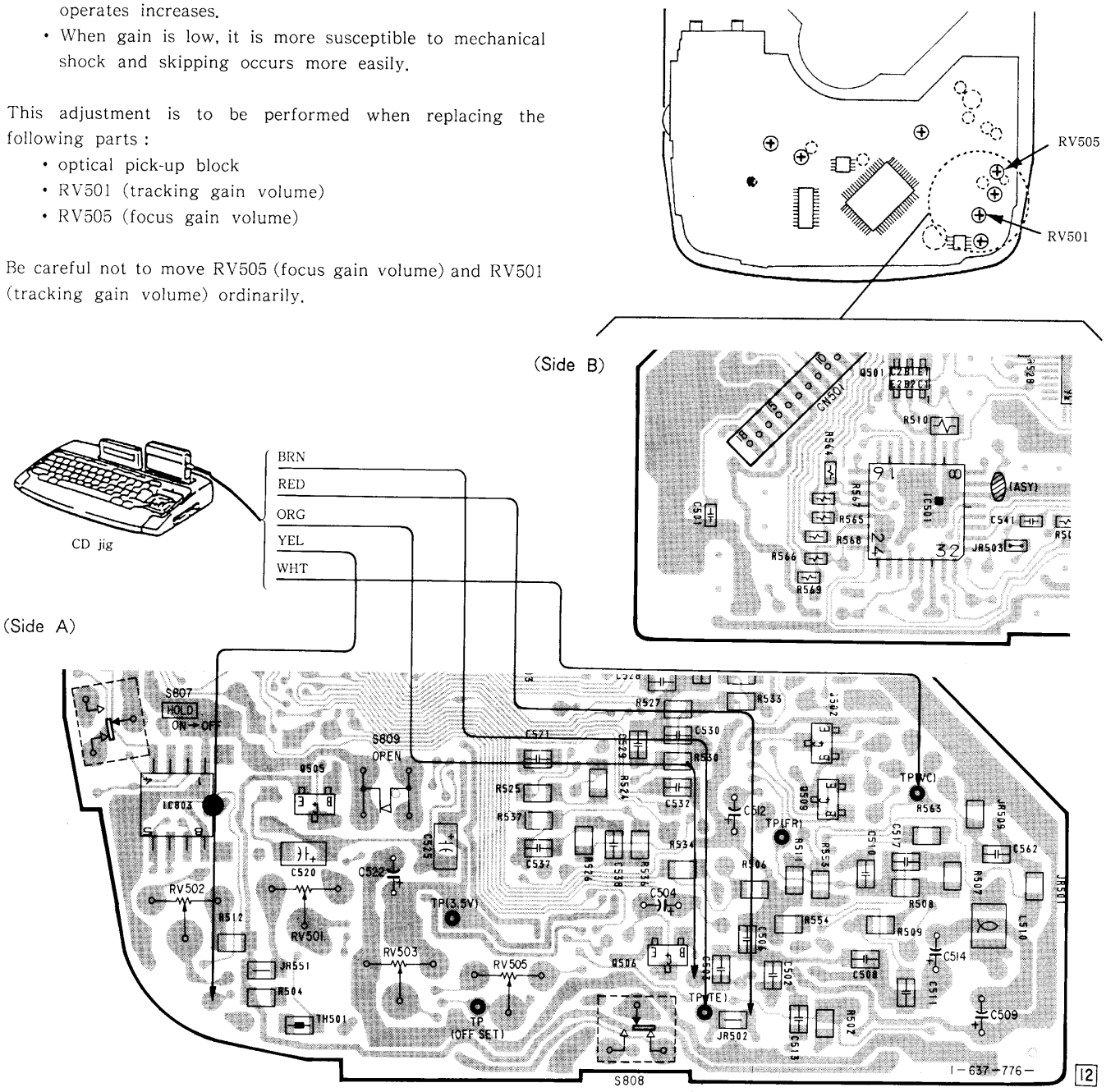

# SECTION 4
# DIAGRAMS

## 4-1. SEMICONDUCTOR LEAD LAYOUTS

S-8052ANB-NE-S

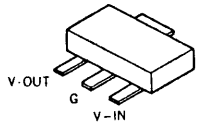


2SB1120-F

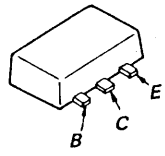


IMD2
XN4601
XN4609

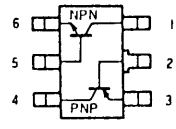


MA157
SB00703C

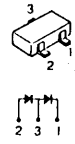


SC7S04F
TC4S30F

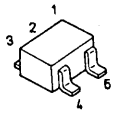


2SD1963-Q•R

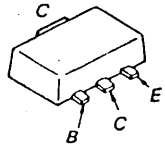


MA728

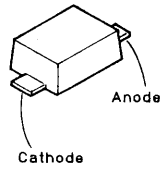


RB110C

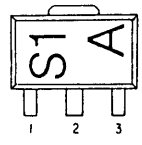


2SA1576-R
2SB624-BV345
2SB1302-S
2SD596-DV4
2SD1328-RST
2SD1781K-R
2SD1781K-QR
DTA114EK
DTA114EU
DTA124EK
DTC113ZU
DTC124EK
DTC143XU
UN5212
XN4608

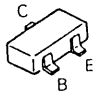


FMG8

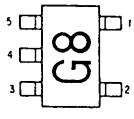


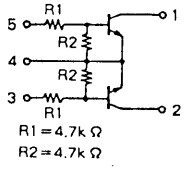


MA152WK
SB007W03C

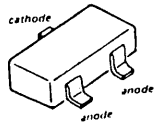


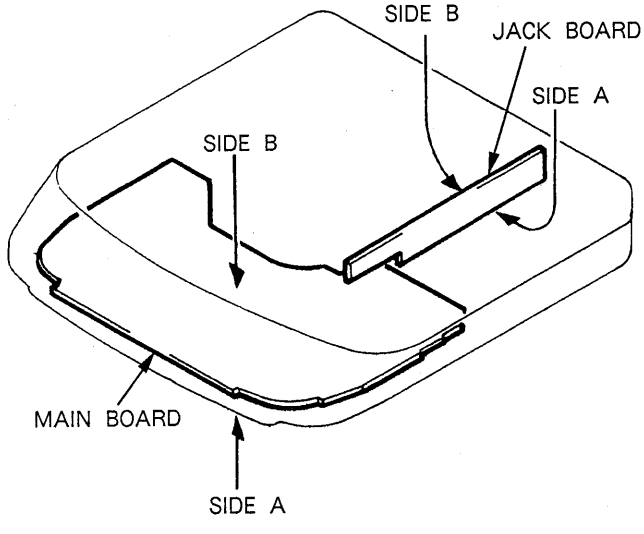

SEE ADDITIONAL INFORMATION

• SEMICONDUCTOR LOCATION

| Ref. No. | Location | Ref. No. | Location |
|---|---|---|---|
| IC301 | E-3 | Q503 | J-16 |
| IC302 | E-16 | Q505 | I-3 |
| IC303 | C-16 | Q506 | J-5 |
| IC401 | C-7 | Q507 | I-17 |
| IC501 | J-14 | Q508 | G-14 |
| IC502 | I-15 | Q509 | I-6 |
| IC504 | F-14 | Q802 | E-2 |
| IC505 | E-13 | Q803 | I-17 |
| IC601 | G-16 | Q804 | D-17 |
| IC602 | F-16 | Q805 | F-3 |
| | | Q806 | E-2 |
| IC801 | G-4 | | |
| IC802 | F-4 | | |
| IC803 | I-2 | D301 | B-16 |
| IC804 | H-5 | D401 | D-17 |
| | | D402 | C-5 |
| | | D404 | E-4 |
| Q101 | C-17 | D405 | D-15 |
| Q103 | C-2 | | |
| Q201 | C-3 | D406 | C-4 |
| Q203 | C-17 | D407 | G-17 |
| Q302 | C-16 | D408 | F-17 |
| | | D409 | G-17 |
| Q401 | D-14 | D410 | B-5 |
| Q402 | D-14 | | |
| Q403 | C-14 | D411 | B-5 |
| Q404 | C-14 | D412 | C-7 |
| Q405 | H-2 | D413 | B-6 |
| | | D415 | E-17 |
| Q406 | B-6 | D416 | E-17 |
| Q407 | C-4 | | |
| Q408 | B-15 | D417 | F-17 |
| Q409 | C-15 | D418 | D-4 |
| Q410 | B-13 | D501 | E-6 |
| | | D502 | E-14 |
| Q411 | C-6 | D504 | E-13 |
| Q412 | C-6 | | |
| Q413 | C-6 | D505 | E-13 |
| Q414 | C-15 | D506 | C-5 |
| Q415 | C-13 | D507 | G-6 |
| | | D802 | G-15 |
| Q416 | C-6 | D803 | F-17 |
| Q417 | C-5 | | |
| Q418 | C-14 | D804 | H-5 |
| Q419 | B-5 | D805 | H-5 |
| Q420 | D-15 | D807 | H-5 |
| | | D809 | H-15 |
| Q421 | C-4 | | |
| Q422 | F-11 | | |
| Q423 | C-15 | | |
| Q501 | I-14 | | |
| Q502 | I-6 | | |

Note :

- O— : parts extracted from the component side.
- ■ : parts mounted on the conductor side.
- ⊗ : Through hole.
- ▒ : Pattern on the side which is seen.
- ▒ : Pattern of the rear side.



## 4-2. PRINTED WIRING BOARDS

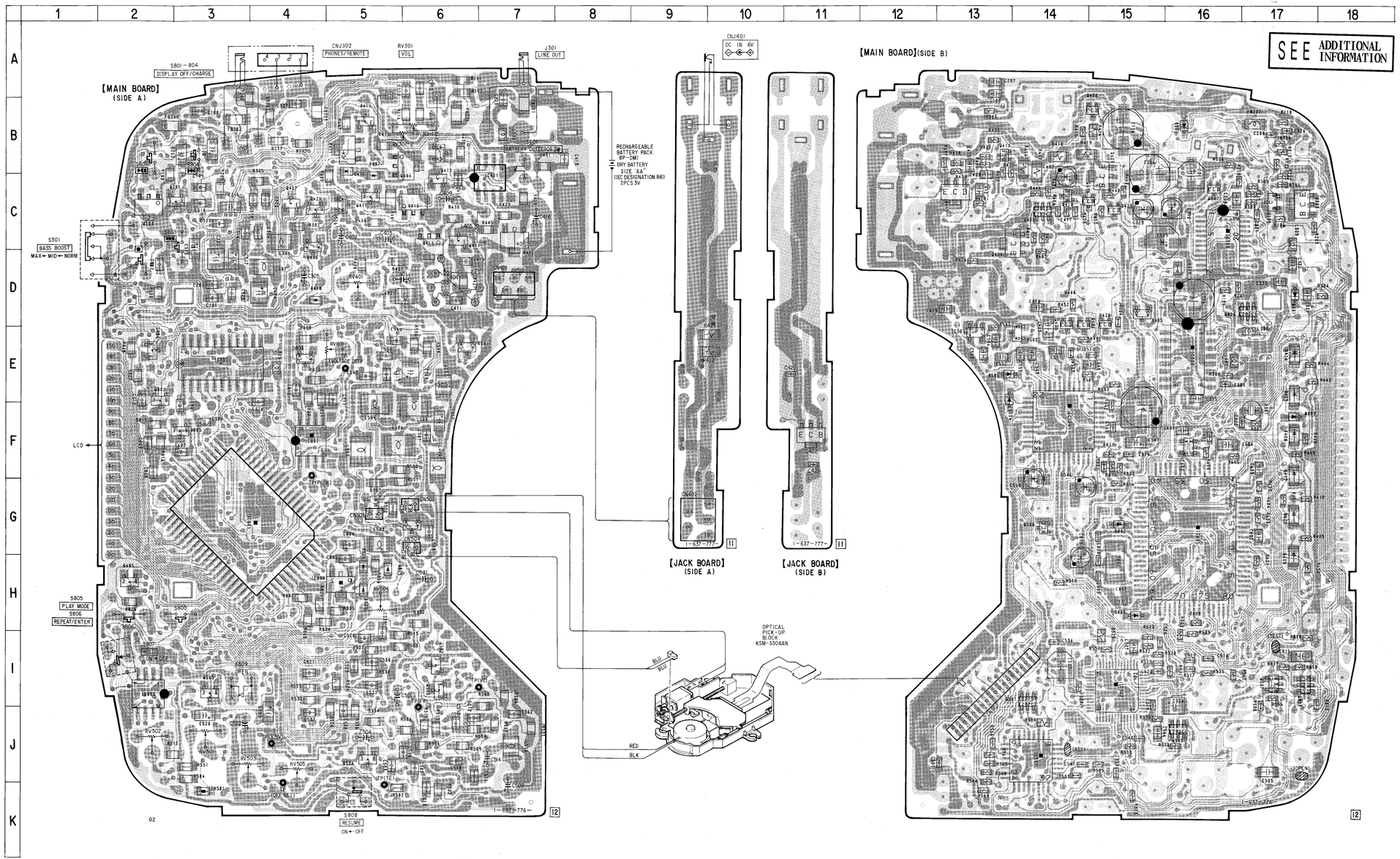

## 4-3. SCHEMATIC DIAGRAM

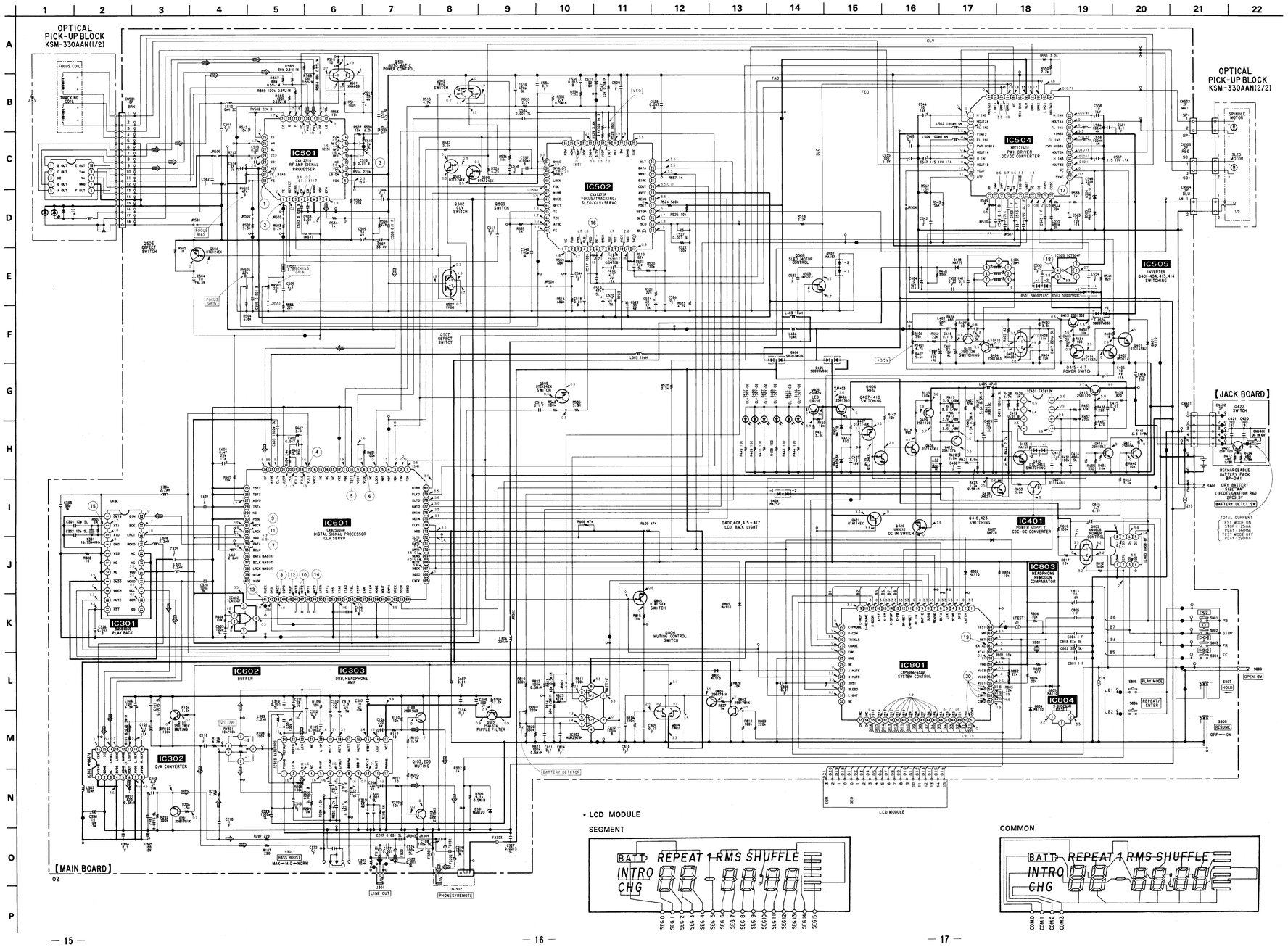


• LCD MODULE

SEGMENT




COMMON




SEE ADDITIONAL INFORMATION

• WAVEFORMS

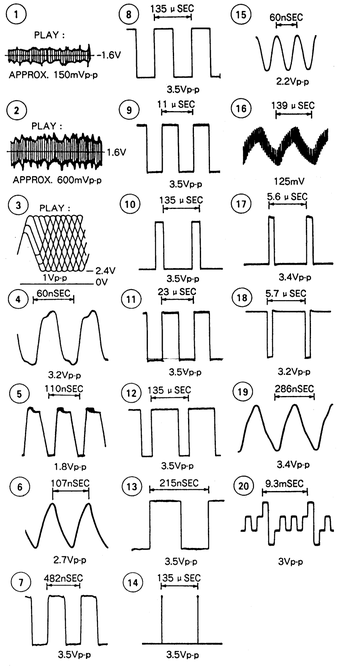


Note :

- All capacitors are in μ F unless otherwise noted. pF : μ μ F 50WV or less are not indicated except for electrolytics and tantalums.
- All resistors are in Ω and ¼W or less unless otherwise specified.
- % : indicates tolerance.
- △ : internal component.

| Note: | Note: |
|---|---|
| The components identified by mark △ or dotted line with mark △ are critical for safety. Replace only with part number specified. | Les composants identifiés par une marque △ sont critiques pour la sécurité. Ne les remplacer que par une pièce portant le numéro spécifié. |

- ▬▬ : B+ Line
- ▭ : adjustment for repair.
- Power voltage is dc 6V and fed with regulated dc power supply from external power voltage jack.
- Voltage and waveforms are dc with respect to ground under the service mode.
- no mark : STOP
  ( ) : PLAY
- Voltages are taken with a VOM (Input impedance 10M Ω). Voltage variations may be noted due to normal production tolerances.
- Waveforms are taken with a oscilloscope. Voltage variations may be noted due to normal production tolerances.
- Circled numbers refer to waveforms.
- Signal path.
  ⇨ : CD

## 4-4. IC BLOCK DIAGRAMS

### IC301 SM5840CS

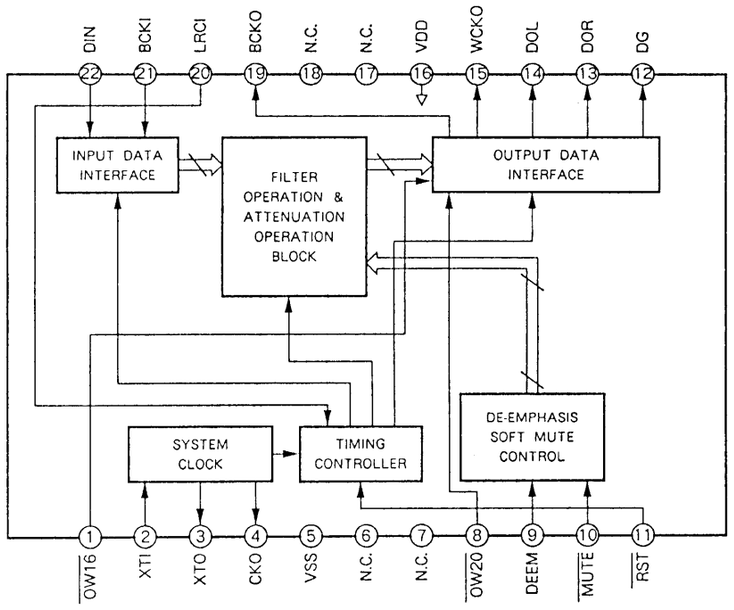


### IC302 μPD6376

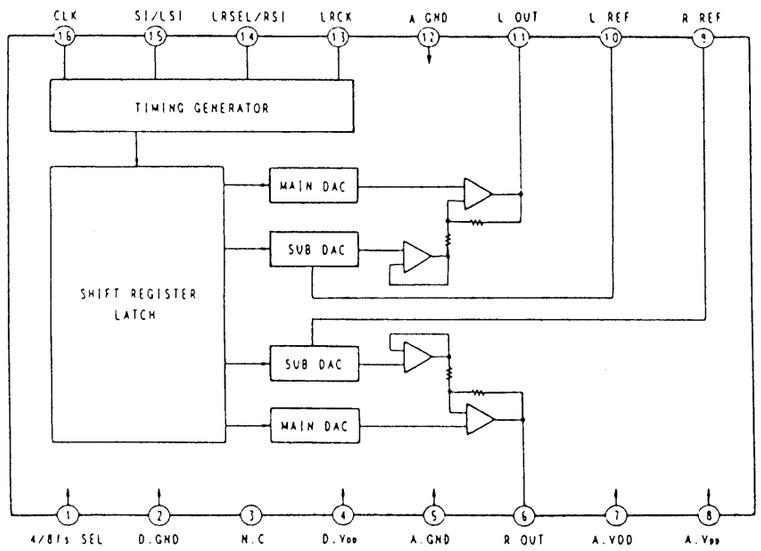


### IC303 BA3570FS

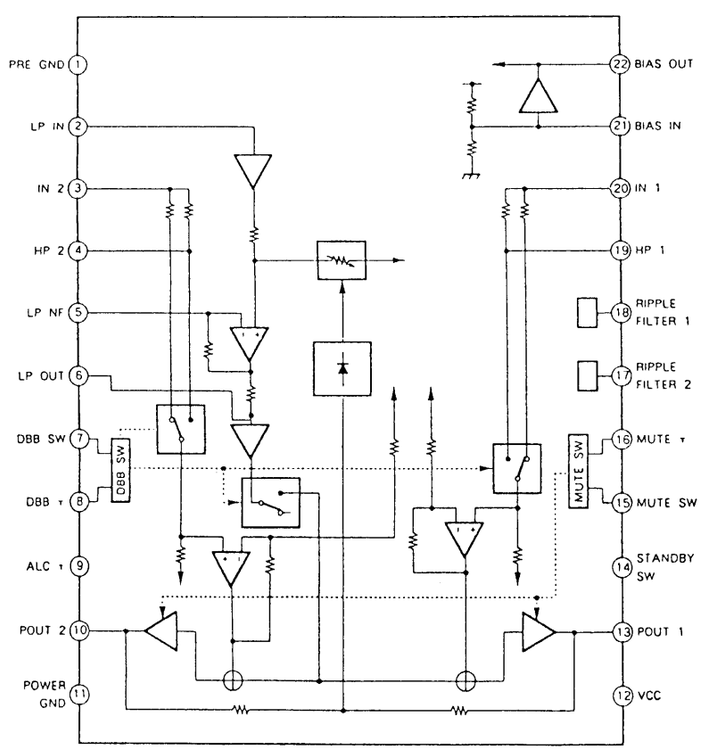


### IC401 FA7612N

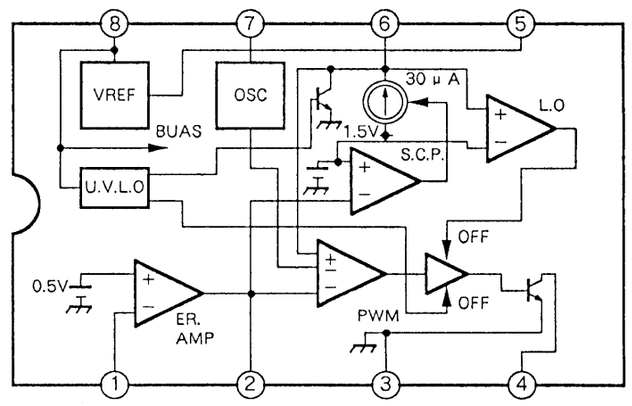


### IC501 CXA1271Q

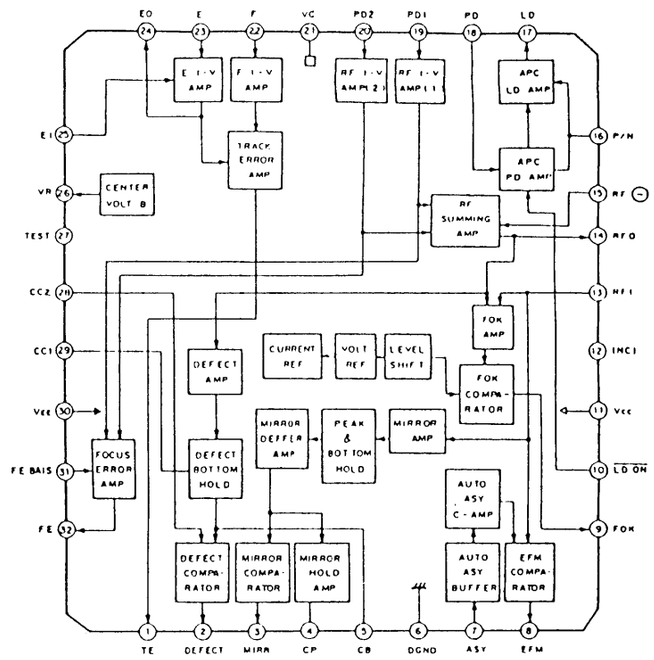


### IC502 CXA1272R

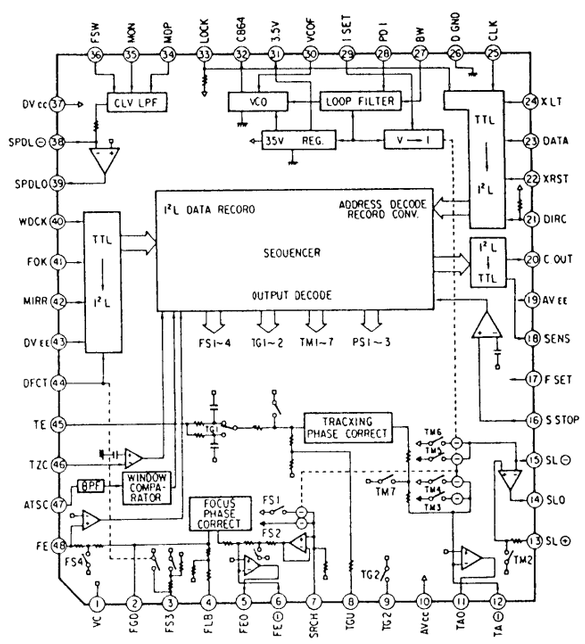


### IC504 MPC1716FU

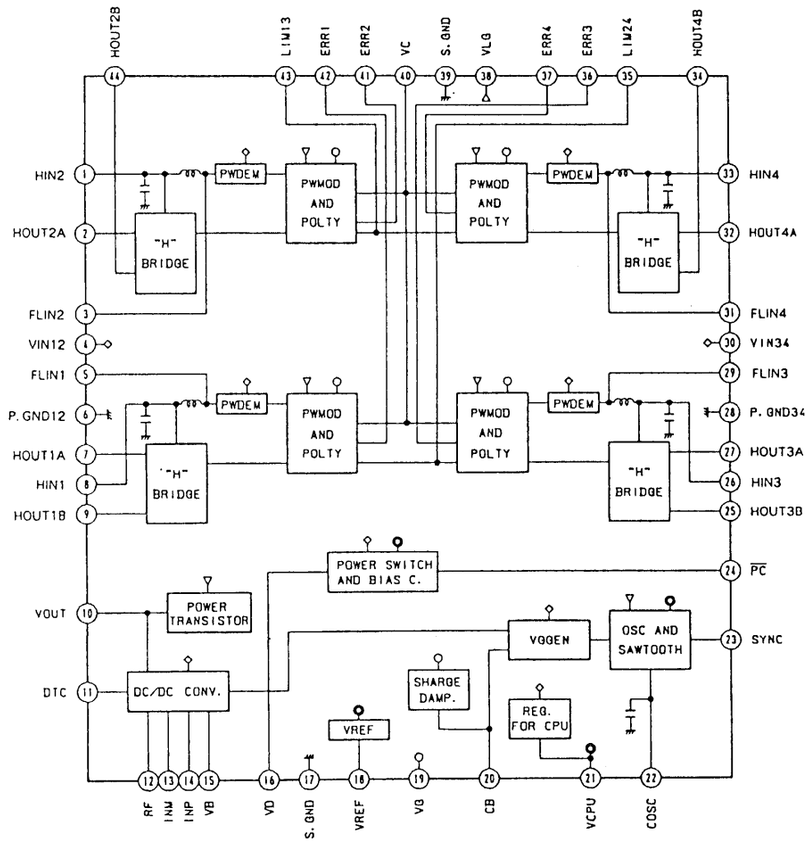


### IC803 BA3818F

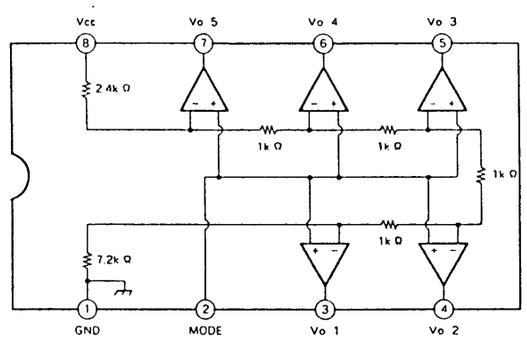

# SECTION 5
# EXPLODED VIEWS

**NOTE:**

- −XX, −X mean standardized parts, so they may have some differences from the original one.
- The construction parts of an assembled part are indicated with a collation number in the remark column.
- Color indication of Appearance Parts Example:
  KNOB, BALANCE (WHITE)....(RED)
  ↑ Parts color ↑ Cabinet's color
- Items marked "*" are not stocked since they are seldom required for routine service. Some delay should be anticipated when ordering these items.
- The mechanical parts with no reference number in the exploded views are not supplied.
- Hardware (#mark) list is given in the last of this parts list.

The components identified by mark ⚠ or dotted line with mark ⚠ are critical for safety.
Replace only with part number specified.

Les composants identifiés par une marque ⚠ sont critiques pour la sécurité.
Ne les remplacer que par une pièce portant le numéro spécifié.

## 5-1. CABINET SECTION

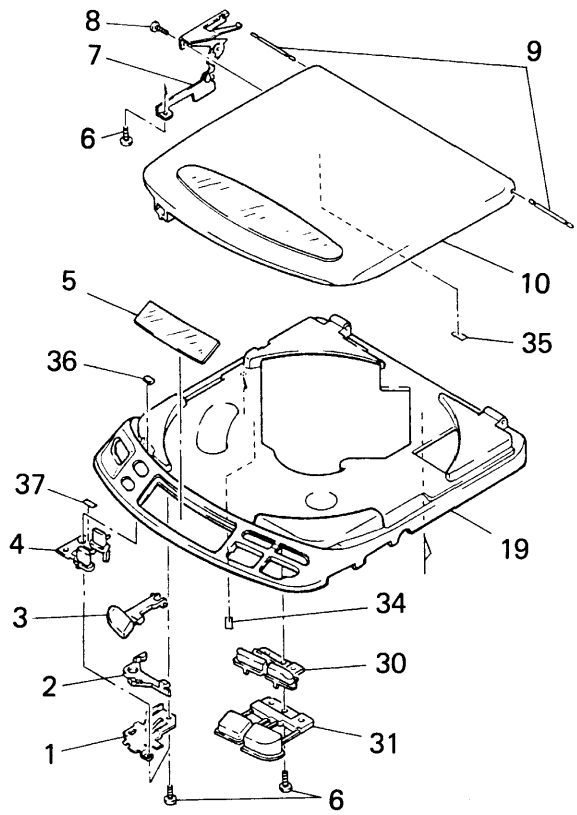


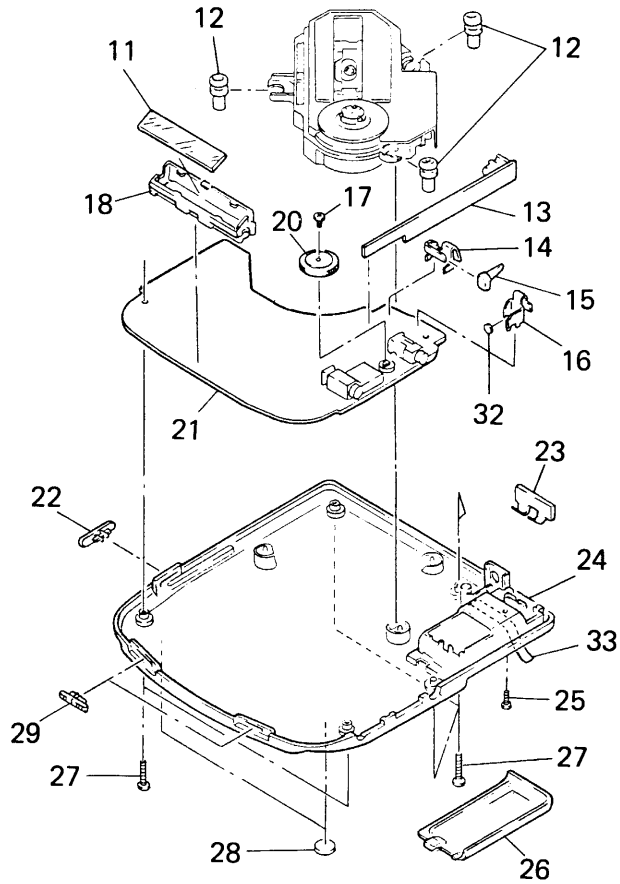


| Ref. No. | Part No. | Description | Remark |
|---|---|---|---|
| 1 | 4-944-353-01 | RETAINER, OPEN | |
| 2 | 4-944-352-01 | CLAW, LID LOCK | |
| 3 | 4-944-351-01 | BUTTON (OPEN) | |
| 4 | 4-944-354-01 | BUTTON (MODE) | |
| 5 | 4-944-343-01 | WINDOW (LCD) | |
| 6 | 3-318-203-71 | SCREW (B1.7X5), TAPPING | |
| 7 | X-4941-517-1 | PLATE ASSY, SWITCHING | |
| 8 | 3-704-197-32 | SCREW (M1.4X3.0) | |
| 9 | 4-944-355-01 | SHAFT (FULCRUM) | |
| 10 | X-4941-673-1 | LID ASSY, UPPER | |
| 11 | 1-809-258-11 | DISPLAY PANEL, LIQUID CRYSTAL | |
| 12 | 4-944-338-01 | INSULATOR | |
| 13 | * 1-637-777-11 | JACK BOARD | |
| 14 | 4-944-348-01 | TERMINAL BOARD (-), BATTERY | |
| 15 | 4-944-363-01 | SEPARATOR | |
| 16 | 4-944-347-01 | TERMINAL BOARD (+), BATTERY | |
| 17 | 3-345-648-01 | SCREW (M1.4X3) | |
| 18 | 4-944-360-01 | HOLDER (LCD) | |
| 19 | 4-944-368-01 | CABINET (UPPER) | |
| 20 | 4-938-812-01 | KNOB (VOLUME) | |

| Ref. No. | Part No. | Description | Remark |
|---|---|---|---|
| 21 | A-3275-020-A | MAIN BOARD, COMPLETE (D-202/202A) (US, Canadian, AEP, E, AUS) | |
| 21 | A-3275-185-A | MAIN BOARD, COMPLETE (D-202) (UK) | |
| 22 | 4-944-346-01 | KNOB (RESUME) | |
| 23 | 4-944-349-01 | TERMINAL BOARD (RELAY), BATTERY | |
| 24 | X-4941-516-1 | CABINET (LOWER) ASSY | |
| 25 | 4-945-318-01 | SCREW (1.4X4), TAPPING | |
| 26 | 4-944-350-01 | LID, BATTERY CASE | |
| 27 | 3-336-395-01 | SCREW (B2X10) (G), TAPPING | |
| 28 | 4-912-641-01 | FOOT, RUBBER | |
| 29 | 4-944-345-01 | KNOB (HOLD) | |
| 30 | 4-944-342-01 | BUTTON (F/R) | |
| 31 | 4-944-341-01 | BUTTON (S/P) | |
| 32 | * 3-312-975-01 | SPACER | |
| 33 | 4-944-367-01 | RIBBON, BATTERY | |
| 34 | 9-911-839-XX | SPACER | |
| 35 | 9-911-838-XX | CUSHION (MD) | |
| 36 | * 4-945-531-01 | CUSHION | |
| 37 | * 4-945-685-01 | SPACER (M) | |

## 5-2. OPTICAL PICK-UP MECHANISM (KSM-330AAN)

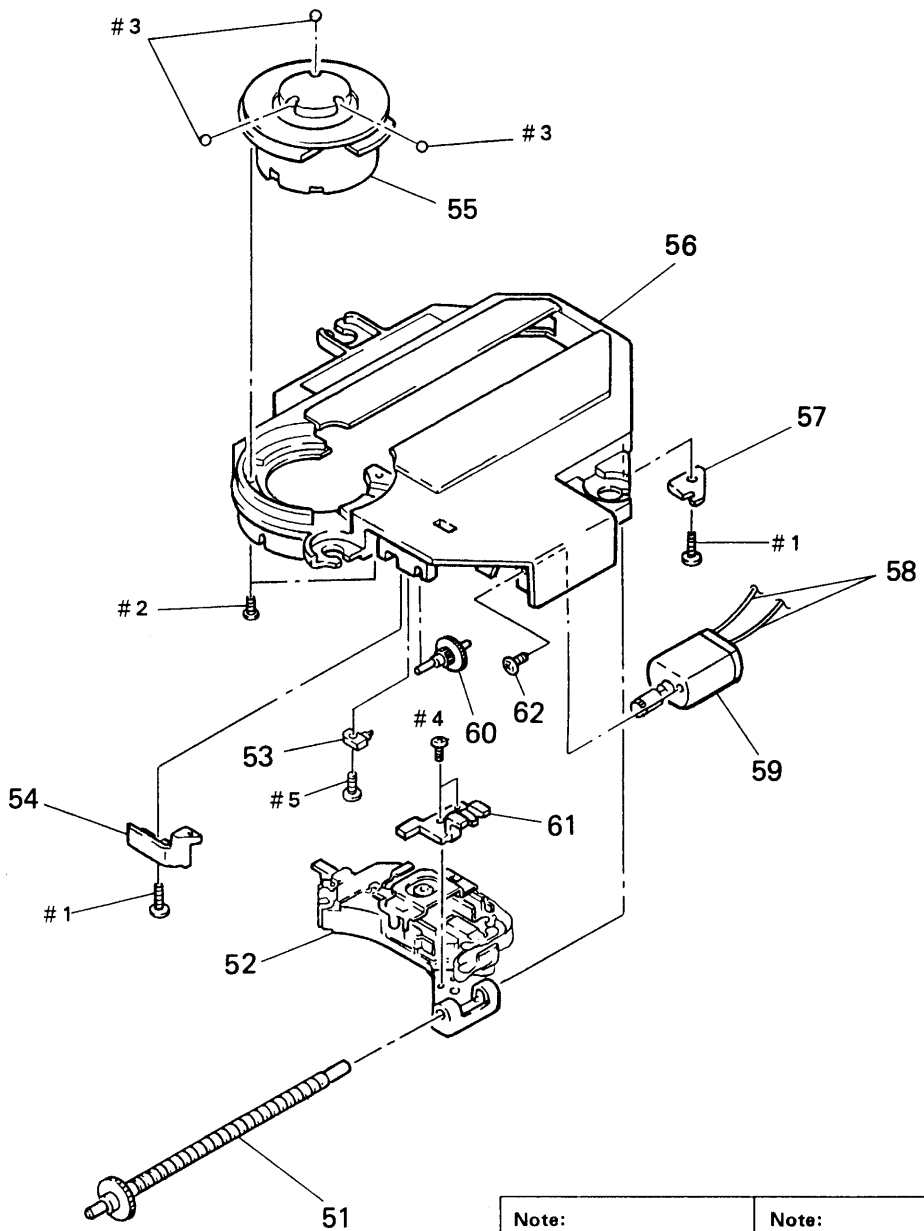


| Note: | Note: |
|---|---|
| The components identified by mark ⚠ or dotted line with mark ⚠ are critical for safety. Replace only with part number specified. | Les composants identifiés par une marque ⚠ sont critiques pour la sécurité. Ne les remplacer que par une pièce portant le numéro spécifié. |

| Ref. No. | Part No. | Description | Remark |
|---|---|---|---|
| 51 | X-2625-173-2 | SCREW ASSY, SLED | |
| 52 | ⚠ 8-848-212-01 | DEVICE, OPTICAL KSS-330A | |
| 53 | 1-570-771-11 | SWITCH | |
| 54 | 2-625-412-02 | SPRING, SLED | |
| 55 | X-2625-172-2 | MOTOR ASSY, T.T. | |
| 56 | 2-625-415-02 | CHASSIS, MD | |
| 57 | 2-625-411-01 | RETAINER, SHAFT | |
| 58 | 1-948-418-21 | HARNESS | |
| 59 | X-2625-171-2 | MOTOR ASSY, SLED | |
| 60 | 2-625-410-01 | GEAR (B) | |
| 61 | 2-625-414-02 | RACK | |
| 62 | 3-732-988-01 | SCREW (M2X2.5) | |

# SECTION 6
# ELECTRICAL PARTS LIST

JACK MAIN

**NOTE:**

- Due to standardization, replacements in the parts list may be different from the parts specified in the diagrams or the components used on the set.
- —XX, —X mean standardized parts, so they may have some difference from the original one.
- RESISTORS
  All resistors are in ohms
  METAL : Metal-film resistor
  METAL OXIDE : Metal Oxide-film resistor
  F : nonflammable
- Items marked "*" are not stocked since they are seldom required for routine service. Some delay should be anticipated when ordering these items.
- SEMICONDUCTORS
  In each case, u : μ, for example :
  uA.... : μA...., uPA.... : μPA....
  uPB.... : μPB...., uPC.... : μPC....
  uPD.... : μPD....
- CAPACITORS
  uF : μF
- COILS
  uH : μH

The components identified by mark ⚠ or dotted line with mark ⚠ are critical for safety.
Replace only with part number specified.

Les composants identifiés par une marque ⚠ sont critiques pour la sécurité.
Ne les remplacer que par une pièce portant le numéro spécifié.

When indicating parts by reference number, please include the board name.

| Ref. No. | Part No. | Description | | | Remark |
|---|---|---|---|---|---|
| | * 1-637-777-11 | JACK BOARD | | | |
| | | ********** | | | |
| | | < CAPACITOR > | | | |
| C420 | 1-162-970-11 | CERAMIC CHIP | 0.01uF | 10% | 25V |
| C421 | 1-162-970-11 | CERAMIC CHIP | 0.01uF | 10% | 25V |
| | | < CONNECTOR > | | | |
| CNJ401 | 1-580-681-21 | JACK, DC (POLARITY UNIFIED TYPE) (DC IN 6V) | | | |
| | | < TRANSISTOR > | | | |
| Q422 | 8-729-806-75 | TRANSISTOR 2SB1120-F | | | |
| | | < RESISTOR > | | | |
| R412 | 1-216-194-00 | METAL CHIP | 680 | 5% | 1/8W |
| R424 | 1-216-194-00 | METAL CHIP | 680 | 5% | 1/8W |
| ********** | | | | | |
| | A-3275-020-A | MAIN BOARD, COMPLETE (D-202/202A) (US, Canadian, AEP, E, AUS) | | | |
| | | ********** | | | |
| | A-3275-185-A | MAIN BOARD, COMPLETE (D-202) (UK) | | | |
| | | ********** | | | |
| | 3-345-648-01 | SCREW (M1.4X3) | | | |
| | 4-938-812-01 | KNOB (VOLUME) | | | |
| | 4-944-347-01 | TERMINAL BOARD (+), BATTERY | | | |
| | 4-944-348-01 | TERMINAL BOARD (-), BATTERY | | | |
| | 4-944-360-01 | HOLDER (LCD) | | | |
| | 4-944-363-01 | SEPARATOR | | | |

| Ref. No. | Part No. | Description | | | Remark |
|---|---|---|---|---|---|
| | | < CAPACITOR > | | | |
| C101 | 1-163-145-00 | CERAMIC CHIP | 0.0015uF | 5% | 50V |
| C102 | 1-135-151-21 | TANTALUM CHIP | 4.7uF | 20% | 4V |
| C106 | 1-126-246-11 | ELECT CHIP | 220uF | 20% | 4V |
| C107 | 1-163-141-00 | CERAMIC CHIP | 0.001uF | 5% | 50V |
| C108 | 1-163-117-00 | CERAMIC CHIP | 100PF | 5% | 50V |
| C109 | 1-164-161-11 | CERAMIC CHIP | 0.0022uF | 10% | 100V |
| C110 | 1-164-346-11 | CERAMIC CHIP | 1uF | | 16V |
| C201 | 1-163-145-00 | CERAMIC CHIP | 0.0015uF | 5% | 50V |
| C202 | 1-135-151-21 | TANTALUM CHIP | 4.7uF | 20% | 4V |
| C206 | 1-126-246-11 | ELECT CHIP | 220uF | 20% | 4V |
| C207 | 1-163-141-00 | CERAMIC CHIP | 0.001uF | 5% | 50V |
| C208 | 1-162-953-11 | CERAMIC CHIP | 100PF | 5% | 50V |
| C209 | 1-164-161-11 | CERAMIC CHIP | 0.0022uF | 10% | 100V |
| C210 | 1-164-346-11 | CERAMIC CHIP | 1uF | | 16V |
| C301 | 1-163-095-00 | CERAMIC CHIP | 12PF | 5% | 50V |
| C302 | 1-162-942-11 | CERAMIC CHIP | 12PF | 5% | 50V |
| C303 | 1-162-947-11 | CERAMIC CHIP | 33PF | 5% | 50V |
| C304 | 1-163-038-00 | CERAMIC CHIP | 0.1uF | | 25V |
| C305 | 1-124-584-00 | ELECT | 100uF | 20% | 10V |
| C306 | 1-126-206-11 | ELECT CHIP | 100uF | 20% | 6.3V |
| C307 | 1-135-201-11 | TANTALUM CHIP | 10uF | 20% | 4V |
| C309 | 1-126-209-11 | ELECT CHIP | 100uF | 20% | 4V |
| C310 | 1-163-141-00 | CERAMIC CHIP | 0.001uF | 5% | 50V |
| C311 | 1-126-207-11 | ELECT CHIP | 33uF | 20% | 4V |
| C312 | 1-128-003-11 | ELECT CHIP | 22uF | 20% | 4V |
| C313 | 1-135-151-21 | TANTALUM CHIP | 4.7uF | 20% | 4V |
| C314 | 1-163-038-00 | CERAMIC CHIP | 0.1uF | | 25V |
| C315 | 1-164-156-11 | CERAMIC CHIP | 0.1uF | | 25V |
| C316 | 1-135-151-21 | TANTALUM CHIP | 4.7uF | 20% | 4V |
| C317 | 1-163-038-00 | CERAMIC CHIP | 0.1uF | | 25V |
| C318 | 1-164-222-11 | CERAMIC CHIP | 0.22uF | | 25V |

SEE ADDITIONAL INFORMATION

## MAIN

| Ref. No. | Part No. | Description | | | Remark |
|---|---|---|---|---|---|
| C319 | 1-128-003-11 | ELECT CHIP | 22uF | 20% | 4V |
| C320 | 1-163-141-00 | CERAMIC CHIP | 0.001uF | 5% | 50V |
| C321 | 1-163-141-00 | CERAMIC CHIP | 0.001uF | 5% | 50V |
| C322 | 1-163-038-00 | CERAMIC CHIP | 0.1uF | | 25V |
| C323 | 1-163-141-00 | CERAMIC CHIP | 0.001uF | 5% | 50V |
| C324 | 1-162-953-11 | CERAMIC CHIP | 100PF | 5% | 50V |
| C325 | 1-164-346-11 | CERAMIC CHIP | 1uF | | 16V |
| C326 | 1-163-809-11 | CERAMIC CHIP | 0.047uF | 10% | 25V |
| C327 | 1-163-145-00 | CERAMIC CHIP | 0.0015uF | 5% | 50V |
| C328 | 1-163-117-00 | CERAMIC CHIP | 100PF | 5% | 50V |
| C329 | 1-163-145-00 | CERAMIC CHIP | 0.0015uF | 5% | 50V |
| C330 | 1-135-216-11 | TANTALUM CHIP | 10uF | 20% | 10V |
| C331 | 1-162-953-11 | CERAMIC CHIP | 100PF | 5% | 50V |
| C332 | 1-164-004-11 | CERAMIC CHIP | 0.1uF | 10% | 25V |
| C401 | 1-127-561-11 | ELECT(SOLID) | 33uF | 20% | 10V |
| C402 | 1-127-561-11 | ELECT(SOLID) | 33uF | 20% | 10V |
| C403 | 1-127-561-11 | ELECT(SOLID) | 33uF | 20% | 10V |
| C404 | 1-135-216-11 | TANTALUM CHIP | 10uF | 20% | 10V |
| C405 | 1-135-201-11 | TANTALUM CHIP | 10uF | 20% | 4V |
| C407 | 1-128-004-11 | ELECT CHIP | 10uF | 20% | 16V |
| C408 | 1-164-346-11 | CERAMIC CHIP | 1uF | | 16V |
| C409 | 1-127-561-11 | ELECT(SOLID) | 33uF | 20% | 10V |
| C410 | 1-163-109-00 | CERAMIC CHIP | 47PF | 5% | 50V |
| C411 | 1-163-038-00 | CERAMIC CHIP | 0.1uF | | 25V |
| C412 | 1-164-232-11 | CERAMIC CHIP | 0.01uF | | 50V |
| C413 | 1-164-505-11 | CERAMIC CHIP | 2.2uF | | 16V |
| C414 | 1-163-137-00 | CERAMIC CHIP | 680PF | 5% | 50V |
| C415 | 1-164-232-11 | CERAMIC CHIP | 0.01uF | | 50V |
| C416 | 1-128-241-11 | ELECT | 220uF | 20% | 10V |
| C417 | 1-162-957-11 | CERAMIC CHIP | 220PF | 5% | 50V |
| C418 | 1-164-004-11 | CERAMIC CHIP | 0.1uF | 10% | 25V |
| C419 | 1-163-141-00 | CERAMIC CHIP | 0.001uF | 5% | 50V |
| C501 | 1-164-156-11 | CERAMIC CHIP | 0.1uF | | 25V |
| C502 | 1-163-989-11 | CERAMIC CHIP | 0.033uF | 10% | 25V |
| C503 | 1-164-232-11 | CERAMIC CHIP | 0.01uF | | 50V |
| C504 | 1-126-157-11 | ELECT | 10uF | 20% | 16V |
| C505 | 1-164-337-11 | CERAMIC CHIP | 2.2uF | | 16V |
| C506 | 1-163-038-00 | CERAMIC CHIP | 0.1uF | | 25V |
| C507 | 1-126-207-11 | ELECT CHIP | 33uF | 20% | 4V |
| C508 | 1-163-038-00 | CERAMIC CHIP | 0.1uF | | 25V |
| C509 | 1-124-431-00 | ELECT | 33uF | 20% | 4V |
| C510 | 1-164-232-11 | CERAMIC CHIP | 0.01uF | | 50V |
| C511 | 1-163-095-00 | CERAMIC CHIP | 12PF | 5% | 50V |
| C512 | 1-124-431-00 | ELECT | 33uF | 20% | 4V |
| C513 | 1-164-232-11 | CERAMIC CHIP | 0.01uF | | 50V |
| C514 | 1-124-431-00 | ELECT | 33uF | 20% | 4V |
| C515 | 1-164-346-11 | CERAMIC CHIP | 1uF | | 16V |
| C516 | 1-164-156-11 | CERAMIC CHIP | 0.1uF | | 25V |
| C517 | 1-163-085-00 | CERAMIC CHIP | 2PF | | 50V |
| C518 | 1-162-970-11 | CERAMIC CHIP | 0.01uF | 10% | 25V |
| C519 | 1-162-949-11 | CERAMIC CHIP | 47PF | 5% | 50V |
| C520 | 1-135-151-21 | TANTALUM CHIP | 4.7uF | 20% | 4V |
| C521 | 1-163-809-11 | CERAMIC CHIP | 0.047uF | 10% | 25V |
| C522 | 1-124-431-00 | ELECT | 33uF | 20% | 4V |
| C523 | 1-162-949-11 | CERAMIC CHIP | 47PF | 5% | 50V |
| C524 | 1-135-202-21 | TANTAL. CHIP | 22uF | 20% | 4V |
| C525 | 1-135-151-21 | TANTALUM CHIP | 4.7uF | 20% | 4V |
| C526 | 1-164-156-11 | CERAMIC CHIP | 0.1uF | | 25V |
| C527 | 1-163-141-00 | CERAMIC CHIP | 0.001uF | 5% | 50V |
| C528 | 1-163-809-11 | CERAMIC CHIP | 0.047uF | 10% | 25V |
| C529 | 1-164-346-11 | CERAMIC CHIP | 1uF | | 16V |
| C530 | 1-163-023-00 | CERAMIC CHIP | 0.015uF | 5% | 50V |
| C531 | 1-124-584-00 | ELECT | 100uF | 20% | 10V |
| C532 | 1-163-141-00 | CERAMIC CHIP | 0.001uF | 5% | 50V |
| C533 | 1-164-346-11 | CERAMIC CHIP | 1uF | | 16V |
| C535 | 1-126-206-11 | ELECT CHIP | 100uF | 20% | 6.3V |
| C536 | 1-164-156-11 | CERAMIC CHIP | 0.1uF | | 25V |
| C537 | 1-163-017-00 | CERAMIC CHIP | 0.0047uF | 5% | 50V |
| C538 | 1-164-346-11 | CERAMIC CHIP | 1uF | | 16V |
| C539 | 1-163-133-00 | CERAMIC CHIP | 470PF | 5% | 50V |
| C540 | 1-162-953-11 | CERAMIC CHIP | 100PF | 5% | 50V |
| C541 | 1-164-156-11 | CERAMIC CHIP | 0.1uF | | 25V |
| C542 | 1-164-346-11 | CERAMIC CHIP | 1uF | | 16V |
| C543 | 1-164-346-11 | CERAMIC CHIP | 1uF | | 16V |
| C544 | 1-163-038-00 | CERAMIC CHIP | 0.1uF | | 25V |
| C546 | 1-128-004-11 | ELECT CHIP | 10uF | 20% | 16V |
| C547 | 1-135-148-21 | TANTAL. CHIP | 1.5uF | 20% | 10V |
| C548 | 1-163-133-00 | CERAMIC CHIP | 470PF | 5% | 50V |
| C549 | 1-164-232-11 | CERAMIC CHIP | 0.01uF | | 50V |
| C550 | 1-164-346-11 | CERAMIC CHIP | 1uF | | 16V |
| C551 | 1-163-038-00 | CERAMIC CHIP | 0.1uF | | 25V |
| C552 | 1-164-222-11 | CERAMIC CHIP | 0.22uF | | 25V |
| C553 | 1-164-005-11 | CERAMIC CHIP | 0.47uF | | 25V |
| C554 | 1-164-346-11 | CERAMIC CHIP | 1uF | | 16V |
| C555 | 1-163-137-00 | CERAMIC CHIP | 680PF | 5% | 50V |
| C557 | 1-135-148-21 | TANTAL. CHIP | 1.5uF | 20% | 10V |
| C558 | 1-128-004-11 | ELECT CHIP | 10uF | 20% | 16V |
| C559 | 1-162-964-11 | CERAMIC CHIP | 0.001uF | 10% | 50V |
| C560 | 1-164-156-11 | CERAMIC CHIP | 0.1uF | | 25V |
| C561 | 1-163-038-00 | CERAMIC CHIP | 0.1uF | | 25V |
| C562 | 1-164-346-11 | CERAMIC CHIP | 1uF | | 16V |
| C563 | 1-135-216-11 | TANTALUM CHIP | 10uF | 20% | 10V |
| C601 | 1-164-346-11 | CERAMIC CHIP | 1uF | | 16V |
| C602 | 1-163-809-11 | CERAMIC CHIP | 0.047uF | 10% | 25V |
| C603 | 1-163-145-00 | CERAMIC CHIP | 0.0015uF | 5% | 50V |
| C604 | 1-135-145-11 | TANTALUM CHIP | 0.47uF | 10% | 25V |
| C605 | 1-162-953-11 | CERAMIC CHIP | 100PF | 5% | 50V |
| C606 | 1-162-970-11 | CERAMIC CHIP | 0.01uF | 10% | 25V |

| Ref. No. | Part No. | Description | | | Remark |
|---|---|---|---|---|---|
| C607 | 1-164-232-11 | CERAMIC CHIP | 0.01uF | | 50V |
| C801 | 1-164-346-11 | CERAMIC CHIP | 1uF | | 16V |
| C802 | 1-162-947-11 | CERAMIC CHIP | 33PF | 5% | 50V |
| C803 | 1-162-947-11 | CERAMIC CHIP | 33PF | 5% | 50V |
| C804 | 1-164-346-11 | CERAMIC CHIP | 1uF | | 16V |
| C805 | 1-164-346-11 | CERAMIC CHIP | 1uF | | 16V |
| C808 | 1-164-232-11 | CERAMIC CHIP | 0.01uF | | 50V |
| C809 | 1-164-005-11 | CERAMIC CHIP | 0.47uF | | 25V |
| C810 | 1-163-038-00 | CERAMIC CHIP | 0.1uF | | 25V |
| C811 | 1-163-038-00 | CERAMIC CHIP | 0.1uF | | 25V |
| C812 | 1-163-009-11 | CERAMIC CHIP | 0.001uF | 10% | 50V |
| C813 | 1-128-004-11 | ELECT CHIP | 10uF | 20% | 16V |
| C814 | 1-164-156-11 | CERAMIC CHIP | 0.1uF | | 25V |
| C815 | 1-135-181-21 | TANTALUM CHIP | 4.7uF | 20% | 6.3V |
| | | < CONNECTOR > | | | |
| CN401 | * 1-580-712-21 | CONNECTOR, BOARD TO BOARD 5P | | | |
| CN501 | 1-566-534-11 | CONNECTOR, FPC (ZIF) 18P | | | |
| CN502 | 1-566-757-11 | PIN, CONNECTOR (PC BOARD) 2P | | | |
| CN503 | 1-566-757-11 | PIN, CONNECTOR (PC BOARD) 2P | | | |
| CN504 | 1-566-757-11 | PIN, CONNECTOR (PC BOARD) 2P | | | |
| CNJ302 | 1-580-680-11 | JACK (PHONES/REMOTE) | | | |
| | | < DIODE > | | | |
| D301 | 8-719-421-21 | DIODE MA8120-L | | | |
| D401 | 8-719-404-46 | DIODE MA110 | | | |
| D402 | 8-719-421-27 | DIODE MA728 | | | |
| D404 | 8-719-403-80 | DIODE MA157 | | | |
| D405 | 8-719-986-76 | DIODE SB007W03C | | | |
| D406 | 8-719-986-76 | DIODE SB007W03C | | | |
| D407 | 8-719-987-41 | LED CL-150Y-CD | | | |
| D408 | 8-719-987-41 | LED CL-150Y-CD | | | |
| D409 | 8-719-987-41 | LED CL-150Y-CD | | | |
| D410 | 8-719-421-82 | DIODE MA8043-M | | | |
| D411 | 8-719-975-33 | DIODE RB110C | | | |
| D412 | 8-719-975-33 | DIODE RB110C | | | |
| D413 | 8-719-403-80 | DIODE MA157 | | | |
| D415 | 8-719-987-41 | LED CL-150Y-CD | | | |
| D416 | 8-719-987-41 | LED CL-150Y-CD | | | |
| D417 | 8-719-987-41 | LED CL-150Y-CD | | | |
| D418 | 8-719-420-51 | DIODE MA729 | | | |
| D501 | 8-719-989-73 | DIODE SB007T03C | | | |
| D502 | 8-719-986-76 | DIODE SB007W03C | | | |
| D504 | 8-719-421-21 | DIODE MA8120-L | | | |
| D505 | 8-719-421-21 | DIODE MA8120-L | | | |
| D506 | 8-719-986-76 | DIODE SB007W03C | | | |
| D507 | 8-719-403-80 | DIODE MA157 | | | |
| D802 | 8-719-404-46 | DIODE MA110 | | | |

| Ref. No. | Part No. | Description | | | Remark |
|---|---|---|---|---|---|
| D803 | 8-719-404-46 | DIODE MA110 | | | |
| D804 | 8-719-404-46 | DIODE MA110 | | | |
| D805 | 8-719-404-46 | DIODE MA110 | | | |
| D807 | 8-719-421-27 | DIODE MA728 | | | |
| D809 | 8-719-404-46 | DIODE MA110 | | | |
| | | < FERRITE BEAD > | | | |
| FB101 | 1-543-813-21 | BEAD, FERRITE | | | |
| FB102 | 1-543-813-21 | BEAD, FERRITE | | | |
| FB201 | 1-543-813-21 | BEAD, FERRITE | | | |
| FB202 | 1-543-813-21 | BEAD, FERRITE | | | |
| FB301 | 1-543-813-21 | BEAD, FERRITE | | | |
| FB303 | 1-543-813-21 | BEAD, FERRITE | | | |
| | | < IC > | | | |
| IC301 | 8-759-501-31 | IC SM5840CS | | | |
| IC302 | 8-759-148-30 | IC uPD6376GS | | | |
| IC303 | 8-759-510-56 | IC BA3570FS | | | |
| IC401 | 8-759-977-83 | IC FA7612N | | | |
| IC501 | 8-752-033-55 | IC CXA1271Q | | | |
| IC502 | 8-752-033-98 | IC CXA1272R | | | |
| IC504 | 8-759-031-89 | IC MPC1716FU | | | |
| IC505 | 8-759-031-84 | IC SC7S04F | | | |
| IC601 | 8-752-337-26 | IC CXD2500AQ | | | |
| IC602 | 8-759-234-13 | IC TC4S30F | | | |
| IC801 | 8-752-830-88 | IC CXP5086-639Q | | | |
| IC802 | 8-759-981-65 | IC LM2903M | | | |
| IC803 | 8-759-998-45 | IC BA3818F-SY | | | |
| IC804 | 8-759-945-21 | IC S-8052ANB-NE-S | | | |
| | | < JACK > | | | |
| J301 | 1-565-287-41 | JACK (LINE OUT) | | | |
| | | < JUMPER > | | | |
| JR302 | 1-216-295-00 | METAL CHIP | 0 | 5% | 1/10W |
| JR303 | 1-216-864-11 | METAL CHIP | 0 | | |
| JR304 | 1-216-864-11 | METAL CHIP | 0 | | |
| JR403 | 1-216-295-00 | METAL CHIP | 0 | 5% | 1/10W |
| JR501 | 1-216-295-00 | METAL CHIP | 0 | 5% | 1/10W |
| JR502 | 1-216-295-00 | METAL CHIP | 0 | 5% | 1/10W |
| JR503 | 1-216-864-11 | METAL CHIP | 0 | | |
| JR504 | 1-216-864-11 | METAL CHIP | 0 | | |
| JR507 | 1-216-864-11 | METAL CHIP | 0 | | |
| JR508 | 1-216-864-11 | METAL CHIP | 0 | | |
| JR509 | 1-216-295-00 | METAL CHIP | 0 | 5% | 1/10W |
| JR510 | 1-216-864-11 | METAL CHIP | 0 | | |
| JR551 | 1-216-295-00 | METAL CHIP | 0 | 5% | 1/10W |
| JR801 | 1-216-864-11 | METAL CHIP | 0 | | |

SEE ADDITIONAL INFORMATION

## MAIN

| Ref. No. | Part No. | Description | Remark |
|---|---|---|---|
| | | < COIL > | |
| L302 | 1-412-006-31 | INDUCTOR CHIP 10uH | |
| L304 | 1-412-033-11 | INDUCTOR, CHIP 220uH | |
| L305 | 1-410-997-31 | INDUCTOR CHIP 2.2uH | |
| L306 | 1-410-997-31 | INDUCTOR CHIP 2.2uH | |
| L307 | 1-412-029-11 | INDUCTOR, CHIP 10uH | |
| L308 | 1-410-997-31 | INDUCTOR CHIP 2.2uH | |
| L309 | 1-410-997-31 | INDUCTOR CHIP 2.2uH | |
| L402 | 1-412-029-11 | INDUCTOR, CHIP 10uH | |
| L403 | 1-412-029-11 | INDUCTOR, CHIP 10uH | |
| L404 | 1-450-401-11 | TRANSFORMER, CONVERTER DC-DC | |
| L405 | 1-450-400-11 | TRANSFORMER, DC-DC CONVERTER | |
| L406 | 1-412-029-11 | INDUCTOR, CHIP 10uH | |
| L502 | 1-412-039-51 | INDUCTOR CHIP 100uH | |
| L503 | 1-412-029-11 | INDUCTOR, CHIP 10uH | |
| L504 | 1-412-039-51 | INDUCTOR CHIP 100uH | |
| L506 | 1-412-039-51 | INDUCTOR CHIP 100uH | |
| L508 | 1-412-039-51 | INDUCTOR CHIP 100uH | |
| L510 | 1-412-029-11 | INDUCTOR, CHIP 10uH | |
| L601 | 1-410-997-31 | INDUCTOR CHIP 2.2uH | |
| | | < DISPLAY PANEL > | |
| LCD | 1-809-258-11 | DISPLAY PANEL, LIQUID CRYSTAL | |
| | | < TRANSISTOR > | |
| Q101 | 8-729-921-72 | TRANSISTOR 2SD1781K-R | |
| Q103 | 8-729-923-36 | TRANSISTOR 2SD1963-Q.R | |
| Q201 | 8-729-921-72 | TRANSISTOR 2SD1781K-R | |
| Q203 | 8-729-923-36 | TRANSISTOR 2SD1963-Q.R | |
| Q302 | 8-729-905-23 | TRANSISTOR 2SA1576-R | |
| Q401 | 8-729-924-39 | TRANSISTOR DTC143XU | |
| Q402 | 8-729-402-45 | TRANSISTOR UN5212 | |
| Q403 | 8-729-402-84 | TRANSISTOR XN4601 | |
| Q404 | 8-729-923-36 | TRANSISTOR 2SD1963-Q.R | |
| Q405 | 8-729-141-48 | TRANSISTOR 2SB624-BV345 | |
| Q406 | 8-729-923-36 | TRANSISTOR 2SD1963-Q.R | |
| Q407 | 8-729-901-04 | TRANSISTOR DTA114EK | |
| Q408 | 8-729-924-39 | TRANSISTOR DTC143XU | |
| Q409 | 8-729-806-75 | TRANSISTOR 2SB1120-F | |
| Q410 | 8-729-905-23 | TRANSISTOR 2SA1576-R | |
| Q411 | 8-729-420-74 | TRANSISTOR 2SD1328-RST | |
| Q412 | 8-729-901-00 | TRANSISTOR DTC124EK | |
| Q413 | 8-729-822-60 | TRANSISTOR 2SB1302-S | |
| Q414 | 8-729-924-62 | TRANSISTOR DTC113ZU | |
| Q415 | 8-729-806-75 | TRANSISTOR 2SB1120-F | |
| Q416 | 8-729-923-36 | TRANSISTOR 2SD1963-Q.R | |
| Q417 | 8-729-921-72 | TRANSISTOR 2SD1781K-R | |
| Q418 | 8-729-402-45 | TRANSISTOR UN5212 | |
| Q419 | 8-729-901-00 | TRANSISTOR DTC124EK | |
| Q420 | 8-729-402-45 | TRANSISTOR UN5212 | |
| Q421 | 8-729-901-04 | TRANSISTOR DTA114EK | |
| Q423 | 8-729-905-18 | TRANSISTOR DTC144EU | |
| Q501 | 8-729-402-90 | TRANSISTOR XN4609 | |
| Q502 | 8-729-901-00 | TRANSISTOR DTC124EK | |
| Q503 | 8-729-907-39 | TRANSISTOR IMD2 | |
| Q505 | 8-729-901-00 | TRANSISTOR DTC124EK | |
| Q506 | 8-729-901-00 | TRANSISTOR DTC124EK | |
| Q507 | 8-729-924-79 | TRANSISTOR FMG8 | |
| Q508 | 8-729-402-45 | TRANSISTOR UN5212 | |
| Q509 | 8-729-901-05 | TRANSISTOR DTA124EK | |
| Q802 | 8-729-921-73 | TRANSISTOR 2SD1781K-QR | |
| Q803 | 8-729-402-16 | TRANSISTOR XN4608 | |
| Q804 | 8-729-907-39 | TRANSISTOR IMD2 | |
| Q805 | 8-729-901-05 | TRANSISTOR DTA124EK | |
| Q806 | 8-729-921-73 | TRANSISTOR 2SD1781K-QR | |
| | | < RESISTOR > | |
| R101 | 1-216-820-11 | METAL CHIP 820 5% 1/16W | |
| R101 | 1-218-845-11 | METAL CHIP 820 0.50% 1/16W | |
| R102 | 1-216-845-11 | METAL CHIP 100K 5% 1/16W | |
| R103 | 1-216-053-00 | METAL CHIP 1.5K 5% 1/10W | |
| R106 | 1-216-823-11 | METAL CHIP 1.5K 5% 1/16W | |
| R107 | 1-216-033-00 | METAL CHIP 220 5% 1/10W | |
| R108 | 1-216-845-11 | METAL CHIP 100K 5% 1/16W | |
| R109 | 1-216-833-11 | METAL CHIP 10K 5% 1/16W | |
| R110 | 1-216-833-11 | METAL CHIP 10K 5% 1/16W | |
| R116 | 1-216-065-00 | METAL CHIP 4.7K 5% 1/10W | |
| R117 | 1-216-001-00 | METAL CHIP 10 5% 1/10W | |
| R201 | 1-216-820-11 | METAL CHIP 820 5% 1/16W | |
| R201 | 1-218-845-11 | METAL CHIP 820 0.50% 1/16W | |
| R202 | 1-216-845-11 | METAL CHIP 100K 5% 1/16W | |
| R203 | 1-216-823-11 | METAL CHIP 1.5K 5% 1/16W | |
| R206 | 1-216-823-11 | METAL CHIP 1.5K 5% 1/16W | |
| R207 | 1-216-033-00 | METAL CHIP 220 5% 1/10W | |
| R208 | 1-216-845-11 | METAL CHIP 100K 5% 1/16W | |
| R209 | 1-216-073-00 | METAL CHIP 10K 5% 1/10W | |
| R210 | 1-216-833-11 | METAL CHIP 10K 5% 1/16W | |
| R216 | 1-216-065-00 | METAL CHIP 4.7K 5% 1/10W | |
| R217 | 1-216-001-00 | METAL CHIP 10 5% 1/10W | |
| R302 | 1-216-049-00 | METAL CHIP 1K 5% 1/10W | |
| R303 | 1-216-065-00 | METAL CHIP 4.7K 5% 1/10W | |
| R304 | 1-216-822-11 | METAL CHIP 1.2K 5% 1/16W | |
| R305 | 1-216-121-00 | METAL CHIP 1M 5% 1/10W | |
| R306 | 1-216-825-11 | METAL CHIP 2.2K 5% 1/16W | |
| R307 | 1-216-857-11 | METAL CHIP 1M 5% 1/16W | |
| R308 | 1-216-797-11 | METAL CHIP 10 5% 1/16W | |
| R309 | 1-216-674-11 | METAL CHIP 9.1K 0.5% 1/10W | |

SEE ADDITIONAL INFORMATION

MAIN

| Ref. No. | Part No. | Description | | | Remark |
|---|---|---|---|---|---|
| R401 | 1-216-821-11 | METAL CHIP | 1K | 5% | 1/16W |
| R402 | 1-216-827-11 | METAL CHIP | 3.3K | 5% | 1/16W |
| R403 | 1-216-833-11 | METAL CHIP | 10K | 5% | 1/16W |
| R404 | 1-216-833-11 | METAL CHIP | 10K | 5% | 1/16W |
| R405 | 1-216-808-11 | METAL CHIP | 82 | 5% | 1/16W |
| R406 | 1-216-748-11 | METAL CHIP | 39K | 5% | 1/10W |
| R407 | 1-216-067-00 | METAL CHIP | 5.6K | 5% | 1/10W |
| R408 | 1-216-809-11 | METAL CHIP | 100 | 5% | 1/16W |
| R409 | 1-216-809-11 | METAL CHIP | 100 | 5% | 1/16W |
| R410 | 1-216-809-11 | METAL CHIP | 100 | 5% | 1/16W |
| R411 | 1-216-789-11 | METAL CHIP | 2.2 | 5% | 1/16W |
| R413 | 1-216-037-00 | METAL CHIP | 330 | 5% | 1/10W |
| R414 | 1-216-037-00 | METAL CHIP | 330 | 5% | 1/10W |
| R415 | 1-216-845-11 | METAL CHIP | 100K | 5% | 1/16W |
| R416 | 1-216-140-00 | METAL GLAZE | 3.9 | 5% | 1/8W |
| R417 | 1-216-140-00 | METAL GLAZE | 3.9 | 5% | 1/8W |
| R418 | 1-216-140-00 | METAL GLAZE | 3.9 | 5% | 1/8W |
| R419 | 1-216-140-00 | METAL GLAZE | 3.9 | 5% | 1/8W |
| R420 | 1-216-824-11 | METAL CHIP | 1.8K | 5% | 1/16W |
| R421 | 1-216-828-11 | METAL CHIP | 3.9K | 5% | 1/16W |
| R422 | 1-216-840-11 | METAL CHIP | 39K | 5% | 1/16W |
| R423 | 1-216-653-11 | METAL CHIP | 1.2K | 0.5% | 1/10W |
| R425 | 1-218-295-11 | METAL CHIP | 5.6K | 0.50% | 1/16W |
| R425 | 1-218-865-11 | METAL CHIP | 5.6K | 0.50% | 1/16W |
| R426 | 1-216-819-11 | METAL CHIP | 680 | 5% | 1/16W |
| R427 | 1-216-001-00 | METAL CHIP | 10 | 5% | 1/10W |
| R428 | 1-216-829-11 | METAL CHIP | 4.7K | 5% | 1/16W |
| R429 | 1-216-121-00 | METAL CHIP | 1M | 5% | 1/10W |
| R430 | 1-216-073-00 | METAL CHIP | 10K | 5% | 1/10W |
| R431 | 1-216-103-00 | METAL CHIP | 180K | 5% | 1/10W |
| R432 | 1-216-113-00 | METAL CHIP | 470K | 5% | 1/10W |
| R433 | 1-216-839-11 | METAL CHIP | 33K | 5% | 1/16W |
| R434 | 1-216-025-00 | METAL CHIP | 100 | 5% | 1/10W |
| R435 | 1-216-037-00 | METAL CHIP | 330 | 5% | 1/10W |
| R436 | 1-216-833-11 | METAL CHIP | 10K | 5% | 1/16W |
| R437 | 1-216-817-11 | METAL CHIP | 470 | 5% | 1/16W |
| R438 | 1-216-813-11 | METAL CHIP | 220 | 5% | 1/16W |
| R439 | 1-216-820-11 | METAL CHIP | 820 | 5% | 1/16W |
| R440 | 1-216-833-11 | METAL CHIP | 10K | 5% | 1/16W |
| R441 | 1-216-146-00 | METAL GLAZE | 6.8 | 5% | 1/8W |
| R442 | 1-216-827-11 | METAL CHIP | 3.3K | 5% | 1/16W |
| R443 | 1-216-809-11 | METAL CHIP | 100 | 5% | 1/16W |
| R444 | 1-216-809-11 | METAL CHIP | 100 | 5% | 1/16W |
| R445 | 1-216-655-11 | METAL CHIP | 1.5K | 0.5% | 1/10W |
| R446 | 1-216-825-11 | METAL CHIP | 2.2K | 5% | 1/16W |
| R447 | 1-216-073-00 | METAL CHIP | 10K | 5% | 1/10W |
| R448 | 1-216-851-11 | METAL CHIP | 330K | 5% | 1/16W |
| R449 | 1-216-809-11 | METAL CHIP | 100 | 5% | 1/16W |
| R450 | 1-216-833-11 | METAL CHIP | 10K | 5% | 1/16W |
| R451 | 1-216-827-11 | METAL CHIP | 3.3K | 5% | 1/16W |
| R452 | 1-216-837-11 | METAL CHIP | 22K | 5% | 1/16W |
| R453 | 1-216-830-11 | METAL CHIP | 5.6K | 5% | 1/16W |
| R502 | 1-216-061-00 | METAL CHIP | 3.3K | 5% | 1/10W |
| R503 | 1-216-832-11 | METAL CHIP | 8.2K | 5% | 1/16W |
| R504 | 1-216-069-00 | METAL CHIP | 6.8K | 5% | 1/10W |
| R505 | 1-216-857-11 | METAL CHIP | 1M | 5% | 1/16W |
| R506 | 1-216-081-00 | METAL CHIP | 22K | 5% | 1/10W |
| R507 | 1-216-077-00 | METAL CHIP | 15K | 5% | 1/10W |
| R508 | 1-216-068-00 | METAL CHIP | 6.2K | 5% | 1/10W |
| R509 | 1-216-073-00 | METAL CHIP | 10K | 5% | 1/10W |
| R510 | 1-216-001-00 | METAL CHIP | 10 | 5% | 1/10W |
| R511 | 1-216-097-00 | METAL CHIP | 100K | 5% | 1/10W |
| R512 | 1-216-073-00 | METAL CHIP | 10K | 5% | 1/10W |
| R515 | 1-216-065-00 | METAL CHIP | 4.7K | 5% | 1/10W |
| R516 | 1-216-855-11 | METAL CHIP | 680K | 5% | 1/16W |
| R517 | 1-216-845-11 | METAL CHIP | 100K | 5% | 1/16W |
| R518 | 1-216-825-11 | METAL CHIP | 2.2K | 5% | 1/16W |
| R519 | 1-216-844-11 | METAL CHIP | 82K | 5% | 1/16W |
| R520 | 1-216-849-11 | METAL CHIP | 220K | 5% | 1/16W |
| R521 | 1-216-837-11 | METAL CHIP | 22K | 5% | 1/16W |
| R522 | 1-216-845-11 | METAL CHIP | 100K | 5% | 1/16W |
| R523 | 1-216-829-11 | METAL CHIP | 4.7K | 5% | 1/16W |
| R524 | 1-216-115-00 | METAL CHIP | 560K | 5% | 1/10W |
| R525 | 1-216-073-00 | METAL CHIP | 10K | 5% | 1/10W |
| R526 | 1-216-065-00 | METAL CHIP | 4.7K | 5% | 1/10W |
| R527 | 1-216-683-11 | METAL CHIP | 22K | 0.5% | 1/10W |
| R528 | 1-216-848-11 | METAL CHIP | 180K | 5% | 1/16W |
| R529 | 1-216-062-00 | METAL CHIP | 3.6K | 5% | 1/10W |
| R530 | 1-216-059-00 | METAL CHIP | 2.7K | 5% | 1/10W |
| R532 | 1-216-683-11 | METAL CHIP | 22K | 0.5% | 1/10W |
| R533 | 1-216-059-00 | METAL CHIP | 2.7K | 5% | 1/10W |
| R534 | 1-216-049-00 | METAL CHIP | 1K | 5% | 1/10W |
| R535 | 1-216-863-11 | METAL GLAZE | 3.3M | 5% | 1/16W |
| R536 | 1-216-079-00 | METAL CHIP | 18K | 5% | 1/10W |
| R537 | 1-216-057-00 | METAL CHIP | 2.2K | 5% | 1/10W |
| R538 | 1-216-049-00 | METAL CHIP | 1K | 5% | 1/10W |
| R539 | 1-216-857-11 | METAL CHIP | 1M | 5% | 1/16W |
| R541 | 1-216-820-11 | METAL CHIP | 820 | 5% | 1/16W |
| R542 | 1-216-823-11 | METAL CHIP | 1.5K | 5% | 1/16W |
| R543 | 1-216-842-11 | METAL CHIP | 56K | 5% | 1/16W |
| R544 | 1-216-748-11 | METAL CHIP | 39K | 5% | 1/10W |
| R549 | 1-216-857-11 | METAL CHIP | 1M | 5% | 1/16W |
| R550 | 1-216-057-00 | METAL CHIP | 2.2K | 5% | 1/10W |
| R551 | 1-216-057-00 | METAL CHIP | 2.2K | 5% | 1/10W |
| R553 | 1-216-073-00 | METAL CHIP | 10K | 5% | 1/10W |
| R554 | 1-216-105-00 | METAL CHIP | 220K | 5% | 1/10W |
| R556 | 1-216-837-11 | METAL CHIP | 22K | 5% | 1/16W |

## MAIN

SEE ADDITIONAL INFORMATION

| Ref. No. | Part No. | Description | | | Remark |
|---|---|---|---|---|---|
| R557 | 1-216-821-11 | METAL CHIP | 1K | 5% | 1/16W |
| R559 | 1-216-843-11 | METAL CHIP | 68K | 5% | 1/16W |
| R562 | 1-216-845-11 | METAL CHIP | 100K | 5% | 1/16W |
| R563 | 1-216-099-00 | METAL CHIP | 120K | 5% | 1/10W |
| R564 | 1-216-843-11 | METAL CHIP | 68K | 5% | 1/16W |
| R564 | 1-218-891-11 | METAL CHIP | 68K | 0.50% | 1/16W |
| R565 | 1-216-843-11 | METAL CHIP | 68K | 5% | 1/16W |
| R565 | 1-218-891-11 | METAL CHIP | 68K | 0.50% | 1/16W |
| R566 | 1-216-846-11 | METAL CHIP | 120K | 5% | 1/16W |
| R566 | 1-218-897-11 | METAL CHIP | 120K | 0.50% | 1/16W |
| R567 | 1-216-843-11 | METAL CHIP | 68K | 5% | 1/16W |
| R567 | 1-218-891-11 | METAL CHIP | 68K | 0.50% | 1/16W |
| R568 | 1-216-843-11 | METAL CHIP | 68K | 5% | 1/16W |
| R568 | 1-218-891-11 | METAL CHIP | 68K | 0.50% | 1/16W |
| R569 | 1-216-846-11 | METAL CHIP | 120K | 5% | 1/16W |
| R569 | 1-218-897-11 | METAL CHIP | 120K | 0.50% | 1/16W |
| R570 | 1-216-061-00 | METAL CHIP | 3.3K | 5% | 1/10W |
| R601 | 1-216-845-11 | METAL CHIP | 100K | 5% | 1/16W |
| R602 | 1-216-827-11 | METAL CHIP | 3.3K | 5% | 1/16W |
| R603 | 1-216-827-11 | METAL CHIP | 3.3K | 5% | 1/16W |
| R604 | 1-218-293-11 | METAL GLAZE | 24K | 5% | 1/16W |
| R605 | 1-216-833-11 | METAL CHIP | 10K | 5% | 1/16W |
| R606 | 1-216-833-11 | METAL CHIP | 10K | 5% | 1/16W |
| R608 | 1-216-841-11 | METAL CHIP | 47K | 5% | 1/16W |
| R609 | 1-216-841-11 | METAL CHIP | 47K | 5% | 1/16W |
| R801 | 1-216-073-00 | METAL CHIP | 10K | 5% | 1/10W |
| R802 | 1-216-081-00 | METAL CHIP | 22K | 5% | 1/10W |
| R803 | 1-216-081-00 | METAL CHIP | 22K | 5% | 1/10W |
| R804 | 1-216-081-00 | METAL CHIP | 22K | 5% | 1/10W |
| R805 | 1-216-089-00 | METAL CHIP | 47K | 5% | 1/10W |
| R806 | 1-216-073-00 | METAL CHIP | 10K | 5% | 1/10W |
| R809 | 1-216-849-11 | METAL CHIP | 220K | 5% | 1/16W |
| R810 | 1-216-845-11 | METAL CHIP | 100K | 5% | 1/16W |
| R811 | 1-216-845-11 | METAL CHIP | 100K | 5% | 1/16W |
| R812 | 1-216-854-11 | METAL CHIP | 560K | 5% | 1/16W |
| R813 | 1-216-830-11 | METAL CHIP | 5.6K | 5% | 1/16W |
| R813 | 1-218-886-11 | METAL CHIP | 43K | 0.50% | 1/16W |
| R814 | 1-216-843-11 | METAL CHIP | 68K | 5% | 1/16W |
| R814 | 1-218-891-11 | METAL CHIP | 68K | 0.50% | 1/16W |
| R815 | 1-216-073-00 | METAL CHIP | 10K | 5% | 1/10W |
| R816 | 1-216-105-00 | METAL CHIP | 220K | 5% | 1/10W |
| R817 | 1-216-833-11 | METAL CHIP | 10K | 5% | 1/16W |
| R818 | 1-216-845-11 | METAL CHIP | 100K | 5% | 1/16W |
| R819 | 1-216-105-00 | METAL CHIP | 220K | 5% | 1/10W |
| R820 | 1-216-109-00 | METAL CHIP | 330K | 5% | 1/10W |
| R821 | 1-216-699-11 | METAL CHIP | 100K | 0.5% | 1/10W |
| R822 | 1-216-699-11 | METAL CHIP | 100K | 0.5% | 1/10W |
| R823 | 1-216-853-11 | METAL CHIP | 470K | 5% | 1/16W |
| R826 | 1-216-073-00 | METAL CHIP | 10K | 5% | 1/10W |
| R827 | 1-216-049-00 | METAL CHIP | 1K | 5% | 1/10W |
| R828 | 1-216-073-00 | METAL CHIP | 10K | 5% | 1/10W |

< VARIABLE RESISTOR >

| | | |
|---|---|---|
| RV301 | 1-230-485-11 | RES, VAR, CARBON 10K/10K (VOLUME) |
| RV401 | 1-238-599-11 | RES, ADJ, CARBON 4.7K (+3.5V) |
| RV501 | 1-238-601-11 | RES, ADJ, CARBON 22K (TRACKING GAIN) |
| RV502 | 1-238-601-11 | RES, ADJ, CARBON 22K (TRACKING BALANCE) |
| RV503 | 1-238-602-11 | RES, ADJ, CARBON 47K (FOCUS BIAS) |
| RV504 | 1-238-597-11 | RES, ADJ, CARBON 1K (VCO) |
| RV505 | 1-238-601-11 | RES, ADJ, CARBON 22K (FOCUS GAIN) |
| RV801 | 1-238-604-11 | RES, ADJ, CARBON 220K (BATTERY DETECTOR) |

< SWITCH >

| | | |
|---|---|---|
| S301 | 1-572-597-21 | SWITCH, SLIDE (BASS BOOST) |
| S401 | 1-572-126-11 | SWITCH, PUSH (1 KEY) (BATTERY DETECTOR) |
| S801 | 1-572-596-11 | SWITCH, KEY BOARD (▷II) |
| S802 | 1-572-596-11 | SWITCH, KEY BOARD (■) |
| S803 | 1-572-596-11 | SWITCH, KEY BOARD (▷▷I) |
| S804 | 1-572-596-11 | SWITCH, KEY BOARD (I◁◁) |
| S805 | 1-572-596-11 | SWITCH, KEY BOARD (PLAY MODE) |
| S806 | 1-572-596-11 | SWITCH, KEY BOARD (REPEAT/ENTER) |
| S807 | 1-572-598-21 | SWITCH, SLIDE (HOLD) |
| S808 | 1-572-598-21 | SWITCH, SLIDE (RESUME) |
| S809 | 1-570-953-11 | SWITCH, PUSH (1 KEY) (OPEN) |

< THERMISTOR >

| | | |
|---|---|---|
| TH501 | 1-809-468-11 | THERMISTOR, CHIP |

< CRYSTAL >

| | | |
|---|---|---|
| X301 | 1-577-576-11 | VIBRATOR, CRYSTAL |
| X801 | 1-578-769-11 | VIBLATOR, CERAMIC |

**********

MISCELLANEOUS
**********

| | | |
|---|---|---|
| 52 | 8-848-212-01 | DEVICE, OPTICAL KSS-330A |
| 53 | 1-570-771-11 | SWITCH |
| 58 | 1-948-418-21 | HARNESS |

SEE ADDITIONAL INFORMATION

REVISED

| Ref. No. | Part No. | Description | Remark |
|---|---|---|---|
| | | ACCESSORY & PACKING MATERIAL | |
| | | ********** | |
| | X-4941-637-1 | ADAPTOR ASSY, CAR MOUNT | |
| ⚠• | 1-465-265-11 | ADAPTOR, AC (AC-64N(U)) | (D-202) (US) |
| ⚠• | 1-465-265-11 | ADAPTOR, AC (AC-64N(AE)) | (AEP) |
| ⚠• | 1-465-266-11 | ADAPTOR, AC (AC-64N(CA)) | (D-202) (Canadian) |
| ⚠• | 1-465-269-11 | ADAPTOR, AC (AC-64N(UK)) | (D-202) (UK) |
| ⚠• | 1-465-270-11 | ADAPTOR, AC (AC-64N(AU)) | (D-202) (AUS) |
| ⚠• | 1-465-520-21 | ADAPTOR, AC (AC-64N) | (D-202) (E) |
| ⚠• | 1-465-608-11 | ADAPTOR, AC (AC-64NA) | (D-202) (US) |
| | 1-505-125-11 | HEADPHONE (WITH REMOCON) | (D-202) (Canadian) |
| | 1-505-125-21 | HEADPHONE (WITH REMOTE CONTROL) | (D-202/202A) (UK, AEP) |
| | 1-528-350-11 | BATTERY PACK (BP-DM1) | (D-202) (US, Canadian) |
| | 1-528-350-21 | BATTERY PACK (BP-DM1) | (AEP) |
| | 1-555-658-21 | CORD, CONNECTION | |
| | 1-569-007-11 | ADAPTER, CONVERSION 2P | (D-202) (E) |
| | 1-575-195-11 | CORD, CONNECTION | |
| | 3-752-086-01 | INSTRUCTION | |
| | 3-753-062-11 | MANUAL, INSTRUCTION | (Canadian, AEP, E) (ENGLISH, Canadian, SPANISH) |
| | 3-753-062-21 | MANUAL, INSTRUCTION | (D-202) (US, UK) (ENGLISH) |
| | 3-753-062-41 | MANUAL, INSTRUCTION | (AEP) (DUTCH, SWEDISH, PORTUGUESE) |
| | 3-753-062-51 | MANUAL, INSTRUCTION | (D-202/202A) (AEP) (GERMAN, ITALIAN) |
| * | 4-943-960-01 | CUSHION (UPPER) | |
| * | 4-943-961-01 | CUSHION (LOWER) | (D-202) (US, Canadian) |
| * | 4-943-964-01 | INDIVIDUAL CARTON | (D-202) (US, E) |
| * | 4-943-965-01 | INDIVIDUAL CARTON | (D-202) (AEP, UK) |
| * | 4-943-966-01 | CUSHION (LOWER) | (D-202/202A) (AEP, UK, AUS) |
| * | 4-945-879-01 | INDIVIDUAL CARTON | (D-202A) (AEP) |
| * | 4-946-600-01 | INDIVIDUAL CARTON | (D-202) (Canadian) |
| | 8-953-307-90 | HEADPHONE MDR-A10D SET | (D-202) (US, AEP) |
| | 8-953-400-90 | HEADPHONE MDR-E552 SET | (D-202) (E, AUS) |

**********

## HARDWARE LIST

| | | |
|---|---|---|
| #1 | 7-685-104-19 | SCREW +P 2X6 TYPE2 SLIT |
| #2 | 7-627-552-48 | SCREW, PRECISION +P 1.7X4 |
| #3 | 7-671-155-01 | STEEL BALL 3.0 |
| #4 | 7-627-552-28 | SCREW, PRECISION +P 1.7X2 |
| #5 | 7-685-105-19 | SCREW +P 2X8 TYPE2 SLIT |

**Note:**
The components identified by mark ⚠ or dotted line with mark ⚠ are critical for safety. Replace only with part number specified.

**Note:**
Les composants identifiés par une marque ⚠ sont critiques pour la sécurité. Ne les remplacer que par une pièce portant le numéro spécifié.

9-956-463-11
(Including 9-956-463-91)

Sony Corporation
General Audio Group



English
91E0296-1
Printed in Japan
©1991.5
Published by Customer Relations and Service Group

# D-202/202A

SONY®
# SERVICE MANUAL

*US Model*
*Canadian Model*
*UK Model*
*E Model*
*Australian Model*
D-202
*AEP Model*
D-202/202A

# SUPPLEMENT-1

File this supplement with the service manual.

Subject : Addition of Saudi Arabia model

- Saudi Arabia model (D-202) is similar to the earlier E model (D-202).
- Refer to the D-202/202A service manual for information not contained in this service manual.

PARTS LIST (The difference between each models)

| D-202 | | | |
|---|---|---|---|
| | E model | Saudi Arabia model | |
| Page | Part No. | Part No. | Discription |
| 29 | 1-465-520-21 | – | ADAPTOR, AC (AC-64N) |
| | – | 1-465-268-11 | ADAPTOR, AC (AC-64N(E)) |
| | 1-569-007-11 | 1-569-008-11 | ADAPTOR CONVERSION 2P |
| | * 4-943-961-01 | * 4-943-966-01 | CUSHION (LOWER) |
| | * 4-943-964-01 | * 4-943-965-01 | INDIVIDUAL CARTON |

- Items marked "*" are not stocked since they are seldom required for routine service. Some delay should be anticipated when ordering these items.

9-956-463-81

Sony Corporation
General Audio Group

English
91H02064-1
Printed in Japan
©1991.8
Published by Customer Relations and Service Group

# D-202/202A

SONY
# SERVICE MANUAL

*US Model*
*Canadian Model*
*UK Model*
*E Model*
*Australian Model*
*D-202*

*AEP Model*
*D-202/202A*

# SUPPLEMENT-2

File this Supplement with the Service Manual.

**Subject :**
- **CHANGE OF MAIN BOARD**

**• CHANGE OF MAIN BOARD**

The main board have been changed.
Main printed wiring board and schematic diagram of new type, and changed parts list are described in this supplement-2.
Refer to original service manual previously issued for the other information.

**NEW TYPE IDENTIFICATION**

**【MAIN BOARD】** (SIDE A)

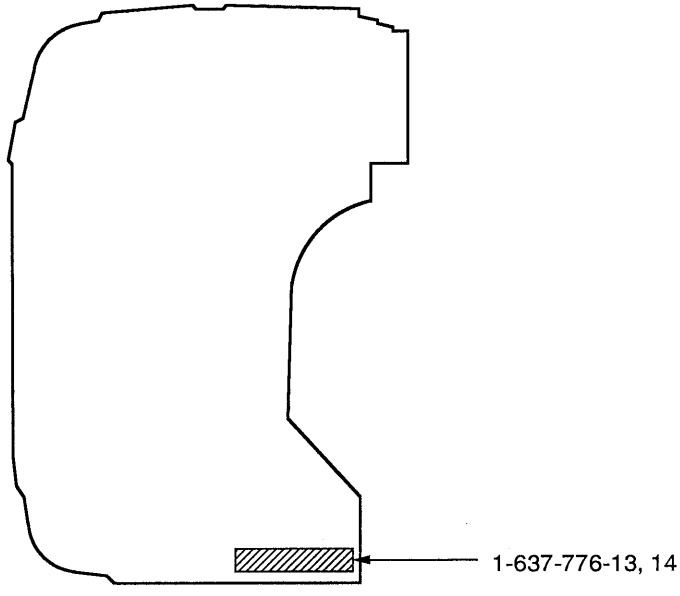



**Sony Corporation**
**Consumer A&V Products Company**
**Personal A&V Products Div.**

**English**
95D02111-1
Printed in Japan


©1994.4


**Published by Home A&V Products Div.**
**Quality Engineering Dept.**

**9-956-463-82**

## ● ELECTRICAL PARTS LIST

MAIN

| Ref. No. | — 12 (Former Type) Part No. | Description | | | | — 13, 14 (New Type) Part No. | Description | | | | Remark |
|---|---|---|---|---|---|---|---|---|---|---|---|
| C531 | 1-124-584-00 | ELECT | 100uF | 20% | 10V | 1-124-434-00 | ELECT | 220uF | 20% | 4V | Change |
| C604 | 1-135-145-11 | TANTALUM CHIP | 0.47uF | 20% | 25V | 1-135-070-00 | TANTALUM CHIP | 0.1uF | 10% | 35V | Change |
| D405 | 8-719-986-76 | DIODE | SB007W03C | | | 8-719-420-51 | DIODE | MA729 | | | Change |
| D807 | 8-719-421-27 | DIODE | MA728 | | | ——— | | | | | Delete |
| JR302 | 1-216-295-00 | METAL CHIP | 0 | 5% | 1/10W | ——— | | | | | Delete |
| JR403 | 1-216-295-00 | METAL CHIP | 0 | 5% | 1/10W | ——— | | | | | Delete |
| JR504 | 1-216-864-11 | METAL CHIP | 0 | | | ——— | | | | | Delete |
| JR507 | 1-216-864-11 | METAL CHIP | 0 | | | ——— | | | | | Delete |
| Q425 | ——— | | | | | 8-729-905-23 | TRANSISTOR | 2SA1576-R | | | Add |
| R456 | ——— | | | | | 1-216-809-11 | METAL CHIP | 100 | 5% | 1/16W | Add |
| R457 | ——— | | | | | 1-216-833-11 | METAL CHIP | 10K | 5% | 1/16W | Add |
| R503 | 1-216-832-11 | METAL CHIP | 8.2K | 5% | 1/16W | 1-216-825-11 | METAL CHIP | 2.2K | 5% | 1/16W | Change |
| R528 | 1-216-848-11 | METAL CHIP | 180K | 5% | 1/16W | 1-216-847-11 | METAL CHIP | 150K | 5% | 1/16W | Change |
| R566 | 1-216-846-11 | METAL CHIP | 120K | 0.50% | 1/16W | 1-218-744-11 | METAL CHIP | 150K | 0.50% | 1/16W | Change |
| R569 | 1-216-846-11 | METAL CHIP | 120K | 0.50% | 1/16W | 1-218-744-11 | METAL CHIP | 150K | 0.50% | 1/16W | Change |
| R571 | ——— | | | | | 1-216-809-11 | METAL CHIP | 100 | 5% | 1/16W | Add |
| R572 | ——— | | | | | 1-216-803-11 | METAL CHIP | 33 | 5% | 1/16W | Add |
| R590 | ——— | | | | | 1-216-833-11 | METAL CHIP | 10K | 5% | 1/16W | Add |
| R591 | ——— | | | | | 1-216-816-11 | METAL CHIP | 390 | 5% | 1/16W | Add |

## ● SEMICONDUCTOR LOCATION

| Ref. No. | Location | Ref. No. | Location |
|---|---|---|---|
| D301 | B-16 | Q101 | C-17 |
| D401 | D-17 | Q103 | C-2 |
| D402 | B-5 | Q201 | C-3 |
| D404 | E-4 | Q203 | C-17 |
| D405 | C-16 | Q302 | C-16 |
| D406 | C-4 | Q401 | D-14 |
| D407 | G-17 | Q402 | D-15 |
| D408 | F-17 | Q403 | C-14 |
| D409 | G-17 | Q404 | C-14 |
| D410 | B-5 | Q405 | H-2 |
| D411 | B-5 | Q406 | B-6 |
| D412 | C-7 | Q407 | C-4 |
| D413 | B-6 | Q408 | A-15 |
| D415 | E-17 | Q409 | B-15 |
| D416 | E-17 | Q410 | B-13 |
| D417 | F-17 | Q411 | C-6 |
| D418 | D-4 | Q412 | B-6 |
| D501 | E-6 | Q413 | C-6 |
| D502 | D-14 | Q414 | C-15 |
| D504 | E-14 | Q415 | C-13 |
| D505 | E-14 | Q416 | C-6 |
| D506 | C-5 | Q417 | C-5 |
| D507 | G-6 | Q418 | C-14 |
| D802 | G-15 | Q419 | B-5 |
| D803 | F-17 | Q420 | D-15 |
| D804 | H-5 | Q421 | C-4 |
| D805 | H-5 | Q422 | F-11 |
| D809 | H-15 | Q423 | C-15 |
| | | Q425 | D-15 |
| IC301 | E-3 | Q501 | I-14 |
| IC302 | E-16 | | |
| IC303 | C-16 | Q502 | I-6 |
| IC401 | B-7 | Q503 | J-16 |
| IC501 | J-14 | Q505 | I-3 |
| | | Q506 | J-5 |
| IC502 | I-15 | Q507 | I-17 |
| IC504 | F-14 | | |
| IC505 | D-13 | Q508 | G-14 |
| IC601 | G-16 | Q509 | I-6 |
| IC602 | F-16 | Q802 | E-2 |
| | | Q803 | I-17 |
| IC801 | G-4 | Q804 | D-17 |
| IC802 | F-4 | | |
| IC803 | I-2 | Q805 | F-3 |
| IC804 | H-5 | Q806 | E-2 |

Note:

- ○— : parts extracted from the component side.
- ■ : parts mounted on the conductor side.
- ● : Through hole.
- ▒ : Pattern on the side which is seen.



## ● PRINTED WIRING BOARDS

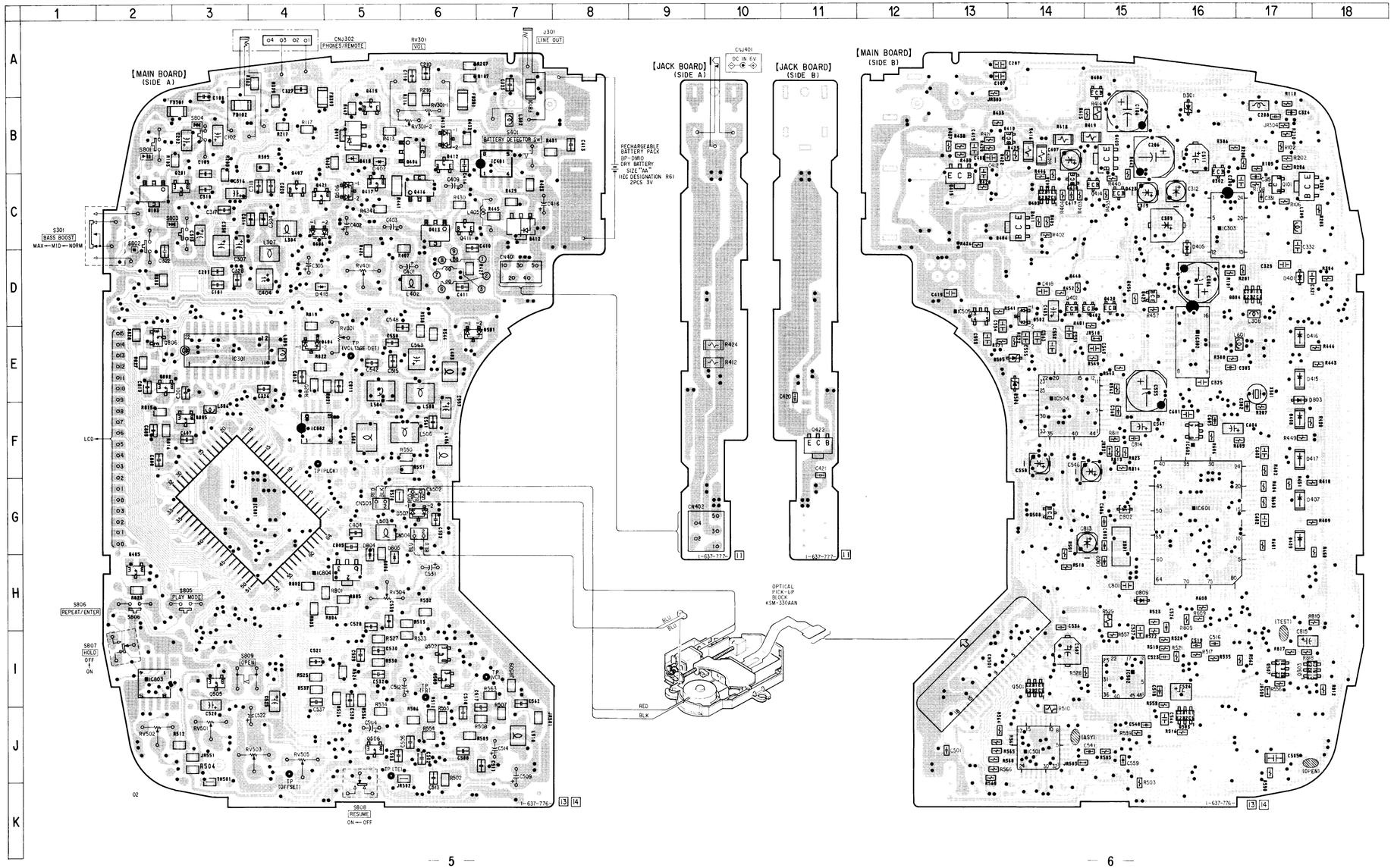

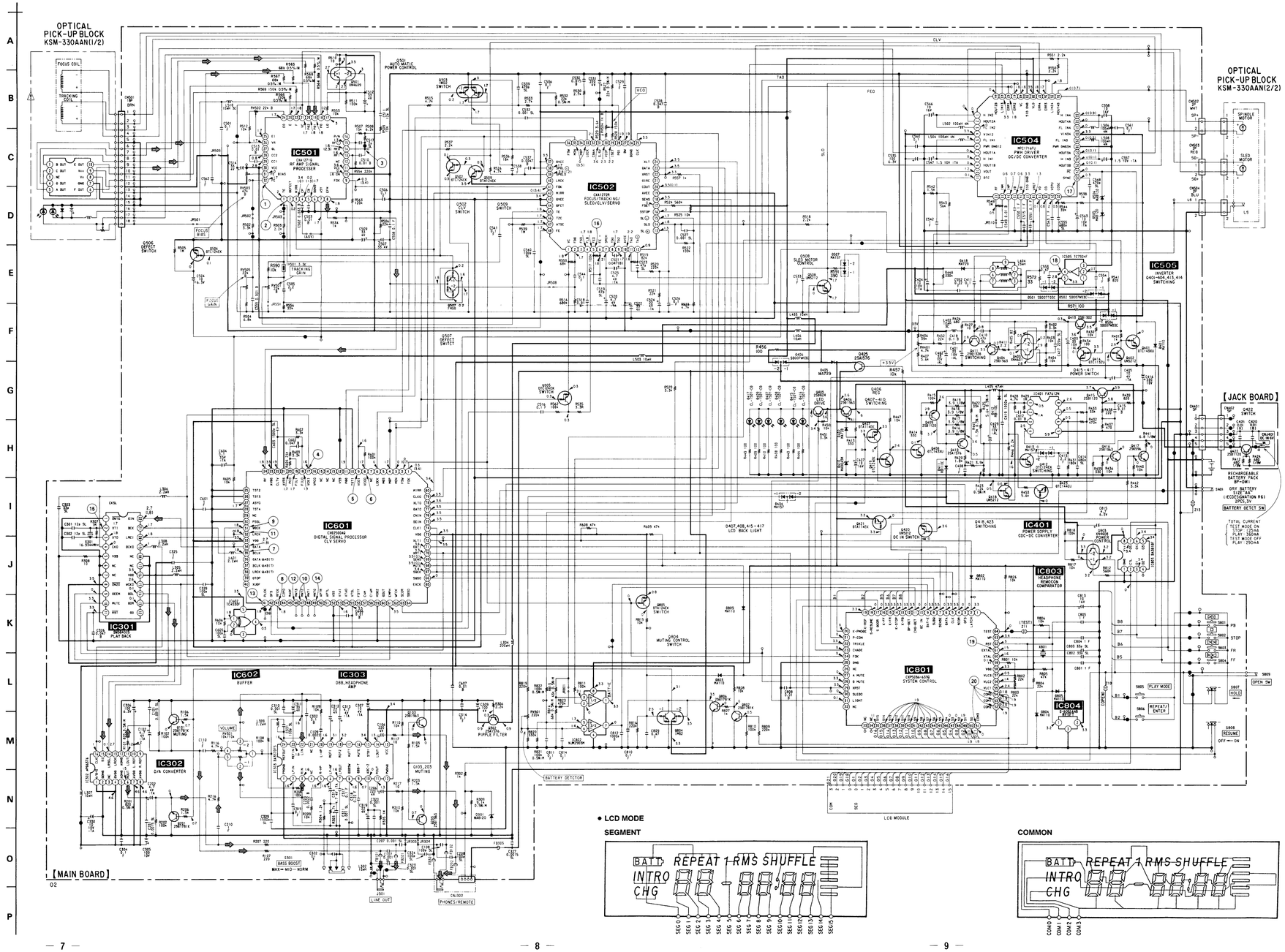


● LCD MODE

SEGMENT




COMMON




● WAVEFORMS

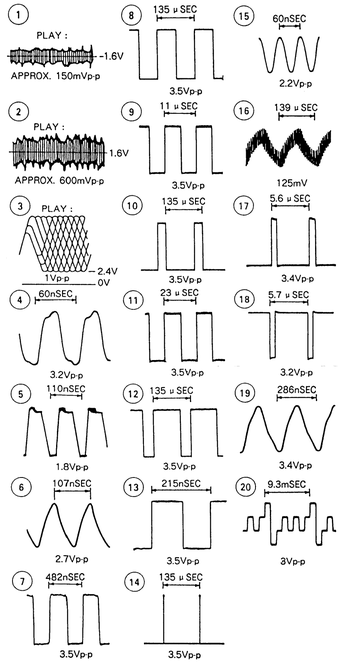


**Note :**

- All capacitors are in μ F unless otherwise noted. pF: μ μ F 50WV or less are not indicated except for electrolytics and tantalums.
- All resistors are in Ω and ¼W or less unless otherwise specified.
- % : indicates tolerance.
- △ : internal component.

| Note : | Note : |
|---|---|
| The components identified by mark ⚠ or dotted line with mark ⚠ are critical for safety. Replace only with part number specified. | Les composants identifiés par une marque ⚠ sont critiques pour la sécurité. Ne les remplacer que par une pièce portant le numéro spécifié. |

- ▬▬ : B+ Line
- ▭ : adjustment for repair.
- Power voltage is dc 6V and fed with regulated dc power supply from external power voltage jack.
- Voltage and waveforms are dc with respect to ground under the service mode.
  no mark : STOP
  ( ) : PLAY
- Voltages are taken with a VOM ( Input impedance 10M Ω ). Voltage variations may be noted due to normal production tolerances.
- Waveforms are taken with a oscilloscope. Voltage variations may be noted due to normal production tolerances.
- Circled numbers refer to waveforms.
- Signal path.
  ⇨ : CD