D-211

SERVICE MANUAL

US Model
Canadian Model
AEP Model
UK Model
E Model
Tourist Model

Model Name Using Similar Mechanism	D-202
CD Mechanism Name	KSM-330AAN (S)

SPECIFICATIONS

System: Compact disc digital audio system

Laser diode properties:
Material: GaAIAs
Wavelength: λ =780 nm
Emission duration: Continuous
Laser output: Less than 44.6 μW
(This output is the value measured at a distance of 200 mm from the objective lens surface on the Optical Pick-up Block.)

Error correction: Sony Super Strategy Cross Interleave Reed Solomon Code

D-A conversion: 1-bit quartz time-axis control

Frequency response: 20–20,000 Hz ±3 dB
(measured by EIAJ CP-307)

Output (at 6 V input level):
Line output (stereo minijack)
Output level 0.9 V rms at 50 kilohms
Load impedance over 10 kilohms
Headphones (stereo minijack)
9 mW + 9 mW at 16Ω

General

Power requirements:
- DC 2.4 V Rechargeable battery pack BP-DM1 (supplied)
- DC 3 V two size AA (LR6) alkaline batteries (not supplied)
- DC IN 6 V jack accepts the Sony AC power adaptor (supplied) for use on:

Where purchased	operating voltage
U.S.A.	120V AC, 60 Hz
United Kingdom/Australia	240V AC, 50 Hz
European countries	220V – 230V AC, 50 Hz
Canada	120V AC, 60 Hz
Saudi Arabia	110V – 240V AC, 50/60 Hz
other countries	100V – 240V AC, 50/60 Hz

- Sony CPM-203P/CPM-200P mount plate and CPM-200PK/CPM-203PK Car mount arm (not supplied) for use on 12 V car battery.

Power consumption: 1.8 W DC

Dimensions: Approx. 132.5 x 26.8 x 157.7 mm (5¼ x 1 1/16 x 6¼ in.) (w/h/d) incl. projecting parts and controls

Weight: Approx. 350 g (12.4 oz.) incl. rechargeable battery

Supplied accessories:
AC power adaptor (1)
Rechargeable battery (1)
Connecting cord (phono plug x 2 ↔ stereo miniplug) (1)
Headphones with remote commander (1)
Car mount adaptor (1)

Design and specifications subject to change without notice.

Note
This appliance conforms with EEC Directive 87/308/EEC regarding interference suppression.

For the Customers in the United Kingdom, European and Australia countries.

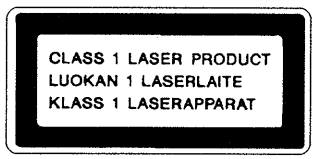

This compact Disc player is classified as a CLASS 1 LASER product.
The CLASS 1 LASER PRODUCT label is located on the bottom exterior.

COMPACT DISC COMPACT PLAYER

SONY®

TABLE OF CONTENTS

SECTION 1
GENERAL

This section is extracted from instruction manual.

Location and Function of Controls

See the pages in ● for more details.

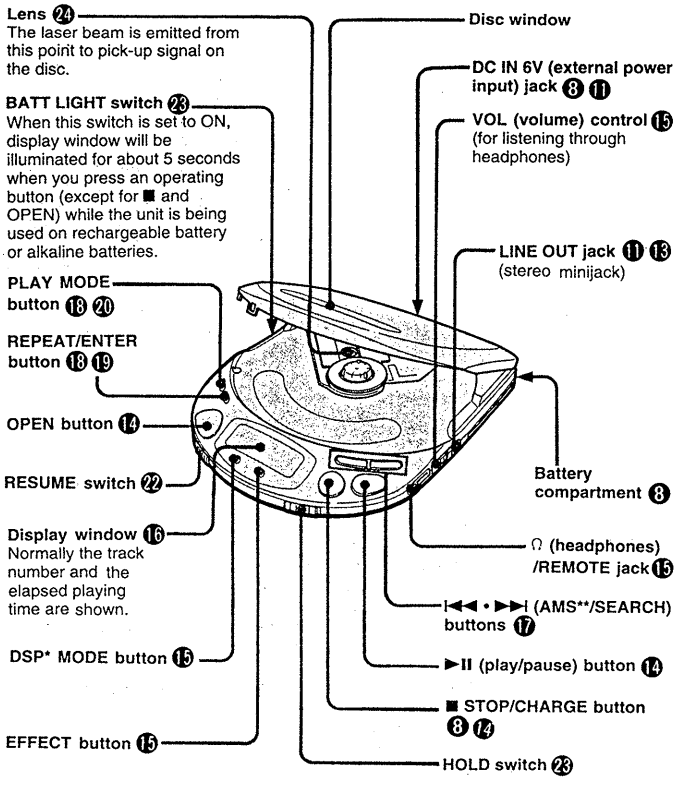

* DSP: Digital Signal Processing
** AMS: Automatic Music Sensor

SAFETY-RELATED COMPONENT WARNING!!

COMPONENTS IDENTIFIED BY MARK ⚠ OR DOTTED LINE WITH MARK ⚠ ON THE SCHEMATIC DIAGRAMS AND IN THE PARTS LIST ARE CRITICAL TO SAFE OPERATION. REPLACE THESE COMPONENTS WITH SONY PARTS WHOSE PART NUMBERS APPEAR AS SHOWN IN THIS MANUAL OR IN SUPPLEMENTS PUBLISHED BY SONY.

ATTENTION AU COMPOSANT AYANT RAPPORT A LA SÉCURITÉ!

LES COMPOSANTS IDENTIFIÉS PAR UNE MARQUE ⚠ SUR LES DIAGRAMMES SCHÉMATIQUES ET LA LISTE DES PIÈCES SONT CRITIQUES POUR LA SÉCURITÉ DE FONCTIONNEMENT. NE REMPLACER CES COMPOSANTS QUE PAR DES PIÈCES SONY DONT LES NUMÉROS SONT DONNÉS DANS CE MANUEL OU DANS LES SUPPLÉMENTS PUBLIÉS PAR SONY.

Headphones with remote commander

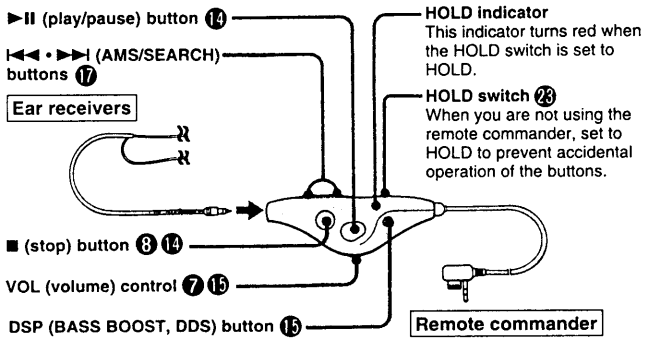

Before using
Connect the headphones to the remote commander securely. A loose connection may cause noise during playback.

When you connect the remote commander to the unit
Make sure that the player is in the stop mode.

When you do not use the remote commander
Detach the remote commander from the Ω/REMOTE jack to avoid battery consumption caused by accidental operation of the commander.

Is it possible to operate other compact disc compact players with the supplied remote commander?
Basically yes. However, some models are not operative.

Controlling the volume with the remote commander
1 Set the VOL control of the remote commander to MAX.
2 Using the VOL control on the unit, adjust the volume to the level that you want to be the maximum when adjusting with the VOL control on the remote commander.
3 Adjust the volume with the remote commander.

Headphones with stereo miniplug
You can use the optional headphones with stereo miniplug with this unit.

Note
The level of "BASS BOOST" and "DDS" cannot be adjusted with the remote commander.

SECTION 2
SERVICING NOTES

NOTES ON HANDLING THE OPTICAL PICK-UP BLOCK OR BASE UNIT

The laser diode in the optical pick-up block may suffer electrostatic breakdown because of the potential difference generated by the charged electrostatic load, etc. on clothing and the human body.
During repair, pay attention to electrostatic breakdown and also use the procedure in the printed matter which is included in the repair parts.
The flexible board is easily damaged and should be handled with care.

Flexible Circuit Board Repairing

- Keep the temperature of the soldering iron around 270 ℃ during repairing.
- Do not touch the soldering iron on the same conductor of the circuit board (within 3 times).
- Be careful not to apply force on the conductor when soldering or unsoldering.

Notes on chip componet replacement

- Never reuse a disconnected chip component.
- Notice that the minus side of a tantalum capacitor may be damaged by heat.

Before Replacing the Optical Block

Please be sure to check thoroughly the parameters as par the "Optical Block Checking Procedures" (Part No. : 9-960-027-11) issued separately before replacing the optical block. Note and specifications required to check are given below.

- FOK output : IC801 ⑱ pin
- S carve P-to-P value : 2.5 — 3.4Vp-p
  When checking FOK and S curve P-to-P value.
  Remove the lead wire to disc motor and short IC801 ⑱ pin to ground.
- Adjusted part for focus gain adjustment : RV505
- RF signal P-to-P value : 0.9 — 1.2Vp-p
- Traverse signal P-to-P value : 1.2 — 2.6p-p
- The grating holder can not repair.
- Adjusted part for tracking gain adjustment : RV501

NOTES ON LASER DIODE EMISSION CHECK

The laser beam on this model is concentrated so as to be focused on the disc reflective surface by the objective lens in the optical pick-up block.
Therefore, when checking the laser diode emission, observe more than 30 cm away from the objective lens.

Laser Diode Check Procedure

The laser diode on this set will not emit unless the upper panel is closed and S809 (push SW type) is turned on. The laser diode will always emit even if focus search is not performed in service mode.
The laser diode is checked using, the current value which flows to the laser diode inside the optical pick-up block.

Procedure 1 (service mode or normal operation)

Check the laser diode emission with the eye.

1. Open upper panel by pushing the OPEN button.
2. S809 on as Fig. 1.
   (In service mode, this operation is not necessary.)
3. Press the ▶II key.
   (In service mode, this operation is not necessary.)
4. Observe the objective lens and confirm that the laser diode goes on about 2.5 seconds due to focus search. If it does not, APC circuit or optical pick-up block is defective.

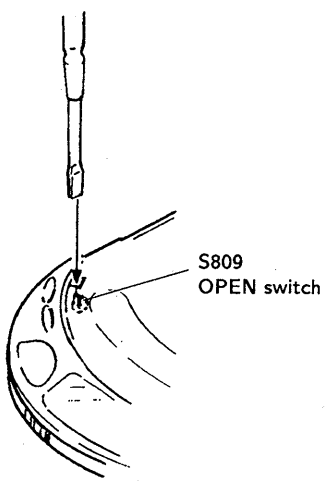

Fig. 1 Turning S809 on

Procedure 2 (service mode or normal operation)

Check by the current with flows in the laser diode.

1. Remove the cabinet.
2. Pick up the optical block by hand and look the rear side of it to see the following the label and read the current value on the label.

(Label on optical pick-up block)

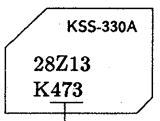

current value
This means 47.3mA.
(The current value varies with the set.)

3. Connect a VOM as shown in fig. 2.
   (both side of R510 : 10Ω)
4. Press the ▶II key.
5. Calculate the current by the VOM reading.
   VOM reading (V) ÷ 10 = current (A)
   ex. VOM reading = 0.47V
   0.47 ÷ 10 = 0.047 (A) = 47 (mA)
6. Confirm that the ammeter reading is within the range given below.
   value on label $^{+5}_{-11}$ mA (25℃)
   variation relative to temperature : 0.4mA/℃
   (Current increases when temperature rises and decreases when it drops.)

If the value is more than the range given, APC circuit has been defective or the laser diode has deteriorated.
If it is less, APC circuit or optical pick-up block is defective.

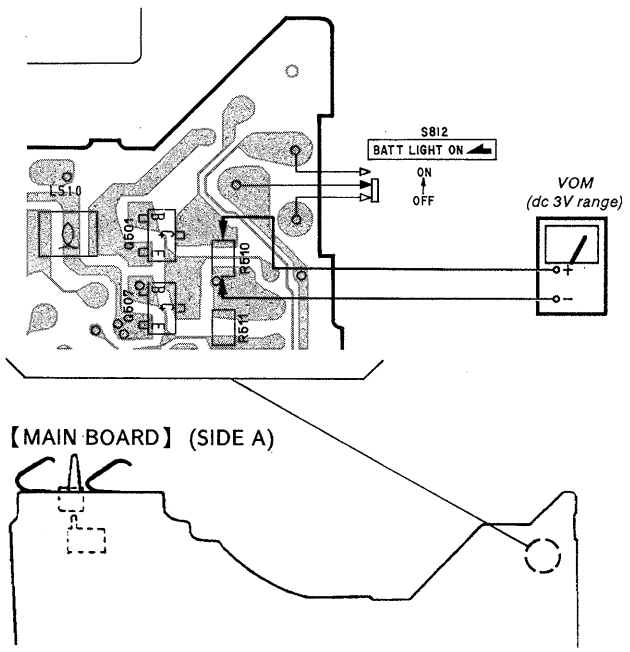

Fig. 2 VOM connecting

SERVICE MODE (service program)

This set has built-in service program in the microcomputer as usual sets.

The operation method of service program is explained below.

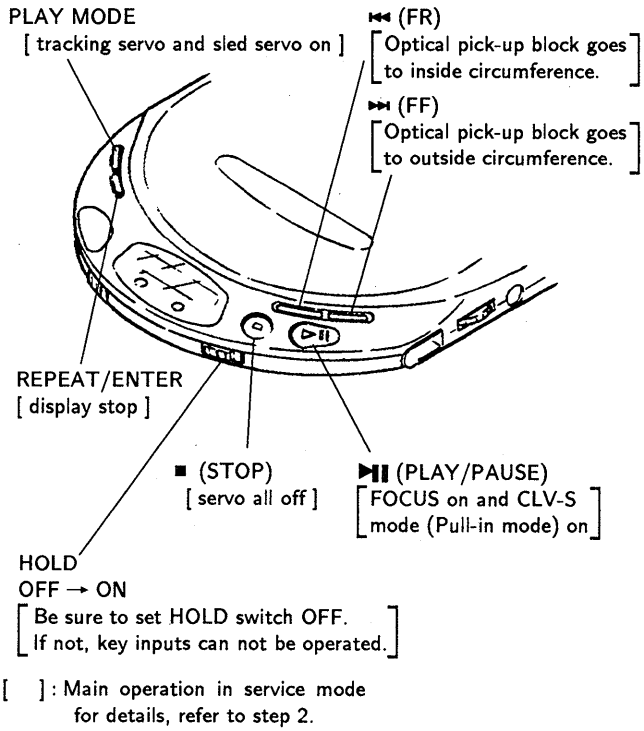

[ ] : Main operation in service mode
for details, refer to step 2.

Fig. 3 Key Positions

• Step 1 (Service Mode setting method)

1. Turn the HOLD switch OFF with the external power supply not plugged in (no power applied to set) .
2. Solder jumper the TEST terminal (IC801 pin ㊺ (TEST) is grounded.) and DOOR terminal (IC801 pin ㊹ (S-DOOR) is grounded.).
3. Plug in the external power supply.
   After preforming the above procedure, the set is switched to service mode.

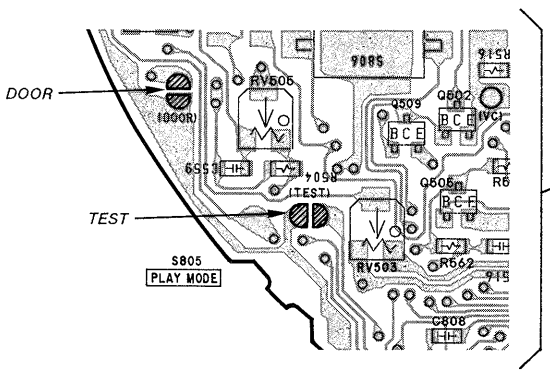

• Step 2 (Service Mode operation)

1. When service mode is set, the display will change 6 times, and those 6 changes will be repeated over and over.
   With this the LCD display should be present in service mode. Even if LCD does not display, other operations will be performed.
2. When ⏭ or ⏮ key is pressed, the optical pick-up block moves to the inside or outside circumference. Tracking servo and sled servo go off when this is done, so press PLAY MODE to turn on the tracking servo if necessary.
3. When REPET/ENTER key is pressed, the display stops. When REPET/ENTER key is released, the display continues to change.
4. When ▶II key is pressed, CLV-S (pull-in mode) starts while performing focus search. When there is no disc installed, focus search is repeated several times while disc motor is rotating.
5. When PLAY MODE is pressed, tracking servo, sled servo and CLV-A (servo during PLAY) go ON.
6. When performing steps 4 and 5, the set starts to play. There is no muting in the service mode.
7. All servo (focus, tracking, sled and spindle) go off when ■ key is pressed. But disc motor continues rotaing for a while by inartia.

• Step 3 (Service Mode release)

1. First be sure to unplug the external power supply, then remove the TEST terminal and DOOR terminal solder jumper.
2. The set will now operated normally.

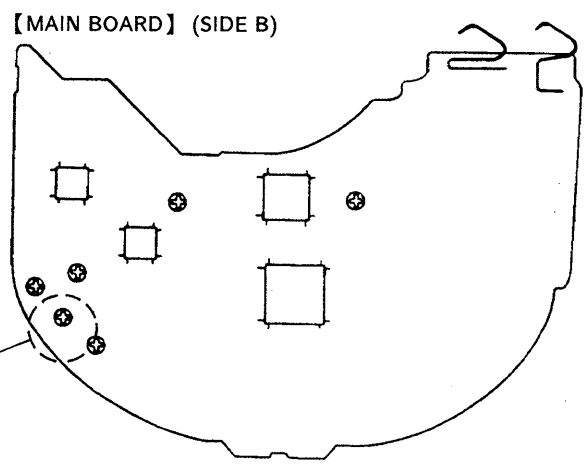

Fig. 4 TEST terminal, OPEN terminal
Solder jumper for the service mode.
(After checking or adjusting in the service mode, be sure to remove this solder jumper.)

SECTION 3
ELECTRICAL ADJUSTMENTS

Notes on Adjustment

1. Perform adjustments in service mode.
   Be sure to release service mode after completing adjustments.
   (Refer to "Service Mode (service program)" on page 5.)
2. Perform adjustments in the order given.
3. Use YEDS-18 disc (part No. : 3-702-101-01) unless otherwise indicated.
4. Power supply voltage : DC 6V
   HOLD switch : OFF
   VOLUME knob : Minimum
   DSP MODE switch : OFF
   RESUME switch : OFF

PREPARATION

Put the set into STOP condition in service mode (See page 5) and perform the following checks. Repair if there are any abnormalities.

• Sled Motor Check

1. Press the ⏭, ⏮ keys and make sure that the optical pick-up block moves smoothly, without catching, from the inmost → outmost → inmost circumference.
   ⏭ : optical pick-up block moves outward
   ⏮ : optical pick-up block moves inward

• Focus Search Check

1. Press the ⏯ key. (Focus search is performed continuously.)
2. Observe the optical pick-up bolck objective lens and check that it moves smoothly up and down with no catching or noises.
3. Press the ■ key.
   Check that focus search operation stops. If it does not, press the ■ key again a little longer time.

VC (1/2 VCC) Connecting Point

FOCUS BIAS ADJUSTMENT
TRACKING BALANCE ADJUSTMENT

When the adjustments above are performed, connect the ⊖ side of oscilloscope to the point below.

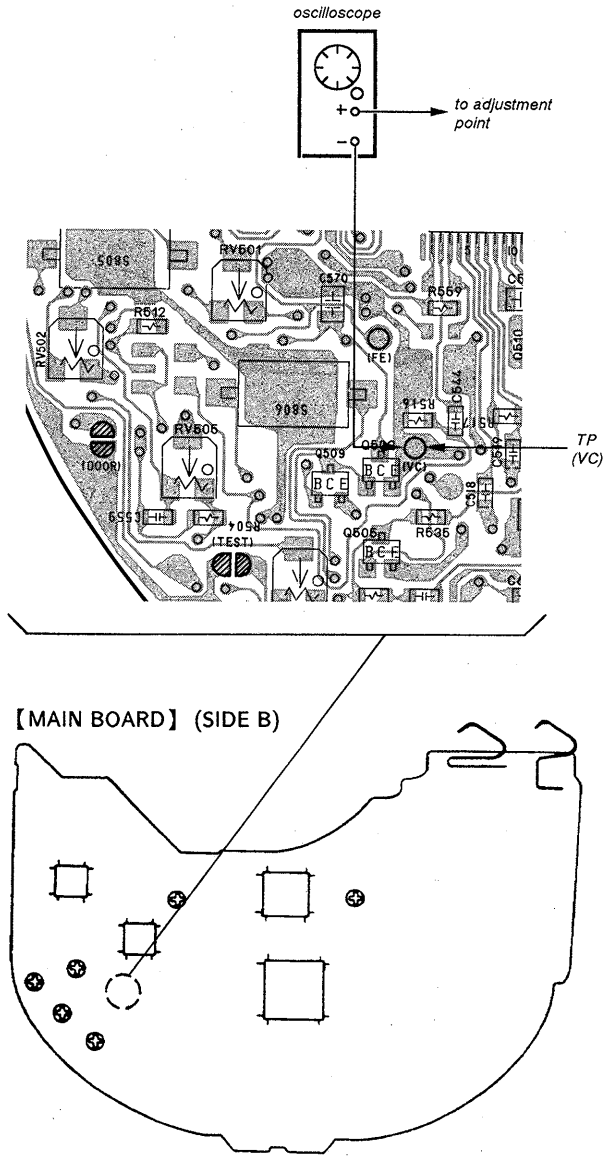

+3.5V Adjustment

Note : Perform the +3.5V adjustment after applying 2.4 V from the battery terminal.

Ajustment Procedure :

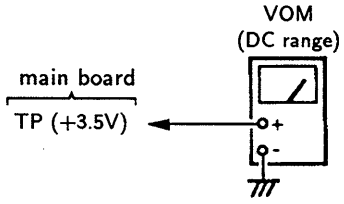

1. Remove the optical pick-up mechanism (KSM-330 AAN(S)).
2. Connect the VOM to main board test point TP (+3.5 V).
3. Adjust RV401 for 3.50 − 3.55V reading on the VOM.
4. After adjustment, release service mode (see page 5).
5. Install the optical pick-up mechanism (KSM-330AAN (S)).

Adjustment Location : main board (side B)

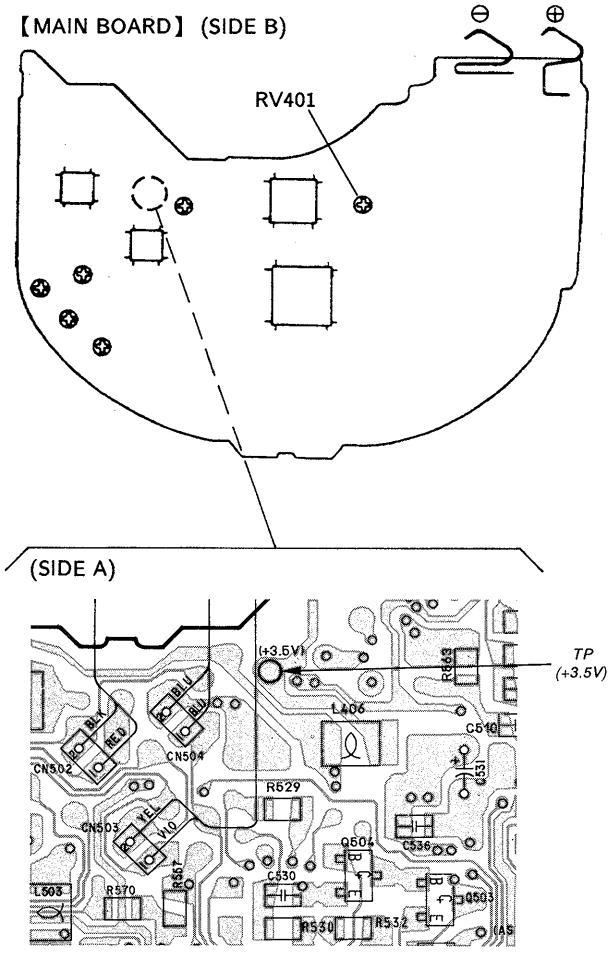

PLL Free Run Frequency Check and Ajustment

Check / Ajustment Procedure :

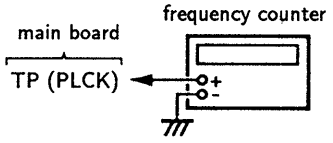

1. Short-circuit the jumper terminal of IC501 ⑦ pin (ASY) to GND.
2. Connect a frequency counter to main board test point TP (PLCK).
3. Put the set into STOP condition in service mode (See page 5).
4. Check that the frequency counter reading is 4.3218 ± 0.01MHz. If not, adjust RV504 so that it is 4.3218 ± 0.01MHz.
5. After adjustment, release service mode (See page 5).
6. Disconnected the jumper terminal in step 1.

Check/Asjustment Location : main board

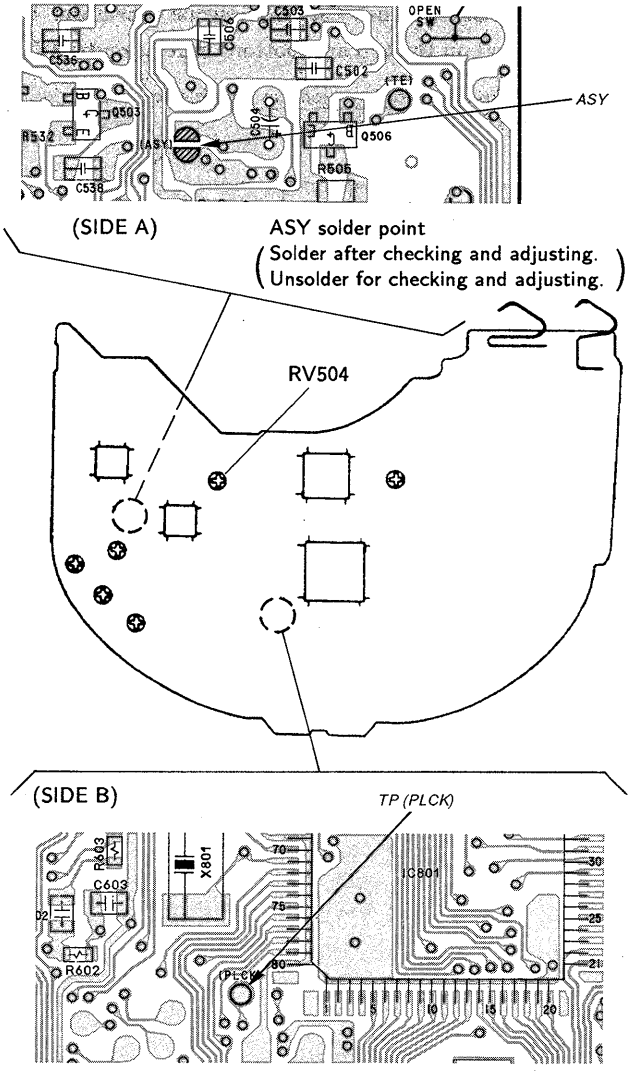

Tracking Balance Adjustment

Conditions :

The set should be placed either horizontally.

Adjustment Procedure :

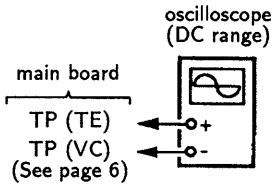

1. Connect a oscilloscope to main board test point TP (TE).
2. Put the set into STOP condition in service mode (See page 5).
3. Press the ⏭ and ⏮ keys to move the optical pick-up block to the center.
4. Put and push the disc (YEDS-18).
5. Press the ▶II key.
   It will go from focus search to focus on, and CLV pull -in mode state. Tracking and sled are OFF.
6. Adjust RV502 so that the oscilloscope wavaform is symmetrical on the top and bottom in relation to 0V.

Note : Take sweep time as long as possible to obtain best waveform.

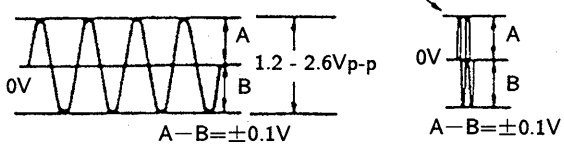

7. Press the ■ key.
8. After adjustment, release service mode (see page 5).

Adjustment Location : main board (side B)

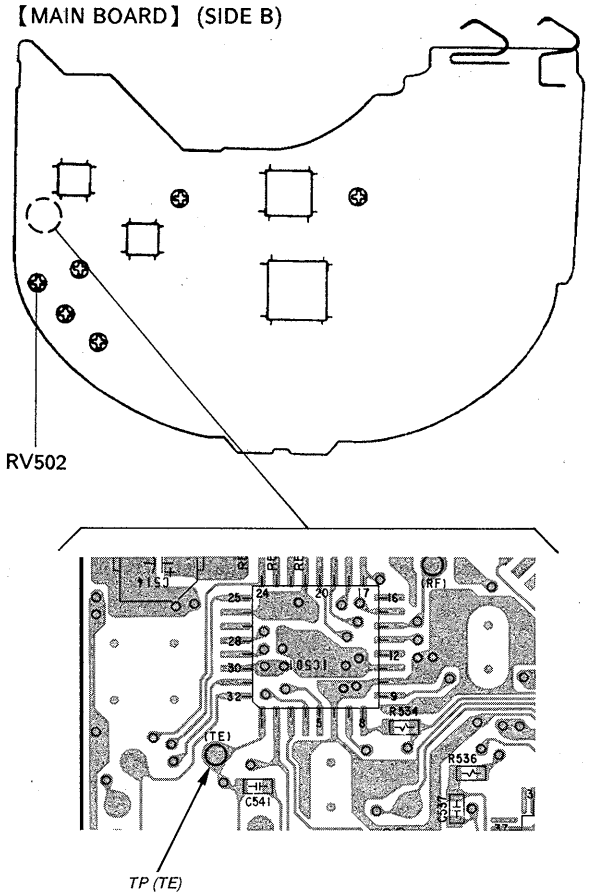

Focus Bias Adjustment

Conditions :

The set should be placed either horizontally.

Adjustment Procedure :

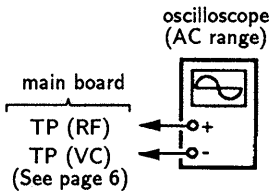

1. Put the set into STOP condition in service mode (See page 5).
2. Connect a osilloscope to main board test point TP (RF).
3. Press the ⏭ and ⏮ key to move the optical pick-up block to the center. (Move the optical pick-up block to the music area on the disc to enable easy visibility of the eye pattern).
4. Put and push the disc (YESD-18).
5. Press the ▶II key.
   (It will go from focus search to focus on, and CLV pull-in mode state. Tracking and sled are OFF.)
6. Press the PLAY MODE button (Tracking and sled go ON.)
7. Adjust RV503 so that the oscilloscope waveform eye pattern is good. A good eye pattern means that the diamond shape (◇) in the center of the waveform can be clearly distinguished.

• RF Signal Refernce Waveform (eye pattern)

VOLT/DIV : 200mV
TIME/DIV : 500nS

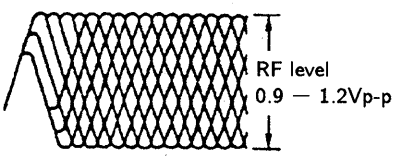

When observing the eye pattern, set the oscilloscope for AC range and raise vertical sensitivity.

8. Measure the voltage between pin ㊽ TP(FE) and VC at focus on position and memorized the measurement voltage.
9. Press the ■ key to stop spindle from rotating.
   Adjust RV503 according to the voltage range within ±20mV between pin ㊽ TP(FE) and VC at the focus on position.

   [For example]
   The voltage value was +10mV between pin ㊽ TP (FE) and VC at the focus on position.
   Readjust RV503 according the voltage range +10±20 mV (−10mV～+30mV) between pin ㊽ TP(FE) and VC at the stop position.
10. After adjustment, release service mode (see page 5).

Adjustment Location : main board (side B)

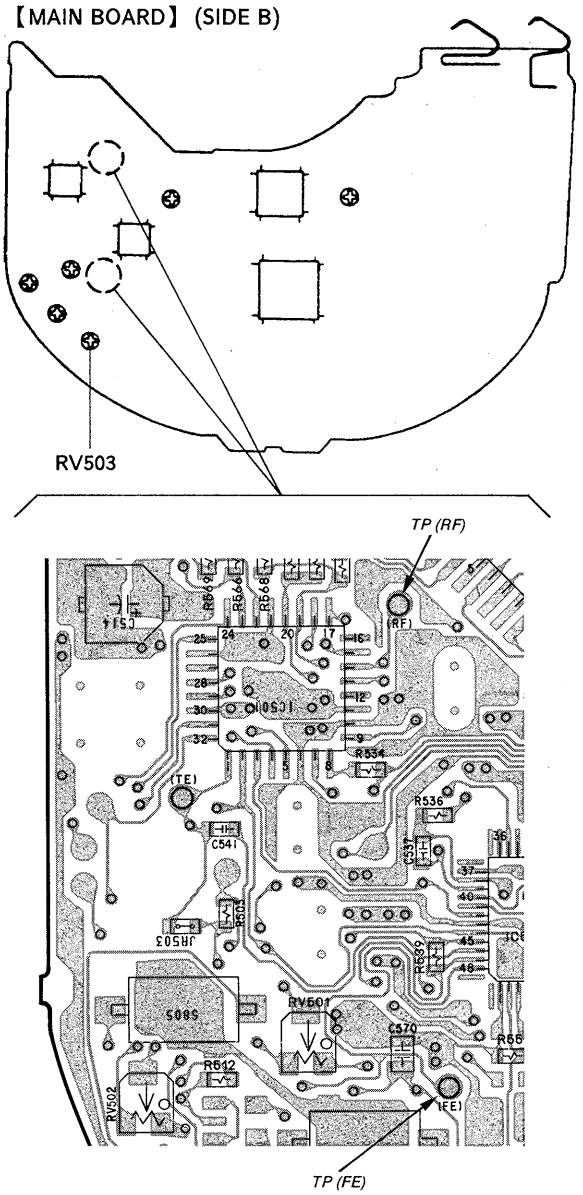

Reference

Focus/Tracking Gain Adjustment

A frequency responce analyzer or CD jig is necessary in order to perform this adjustment exactly.

> However, this gain has a margin, so even if it is slightly off, there is no problem. Therefore, do not perfrom this adjustment.

Focus/tracking gain determines the pick-up follow-up (vertical and horizontal) relative to mechanical noise and mechanical shock when the 2-axis device operate.
However, as these reciprocate, the adjustment is at the point where both are satisfied.

- When gain is high, the noise when the 2-axis device operates increases.
- When gain is low, it is more susceptible to mechanical shock and skipping occurs more easily.

This adjustment is to be performed when replacing the following parts :

- optical pick-up block
- RV501 (tracking gain volume)
- RV505 (focus gain volume)

Be careful not to move RV505 (focus gain volume) and RV501 (tracking gain volume) ordinarily.

【MAIN BOARD】 (SIDE B)

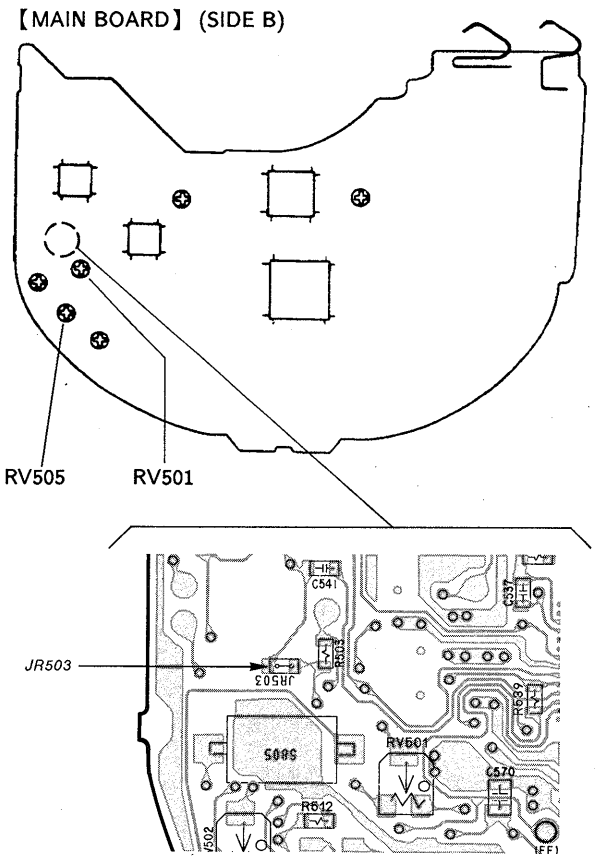

> On this set, it is very difficult to simplify this adjustment. For those sets on which symptoms such as "occasional skipping" are hard to discover, or it is hard to tell if the set has been repaired, use the CD jig and perform this adjustment. Refer to the diagram below for connection of the CD jig. The adjustment procedure is described in the separate CD jig Instruction Manual.

CD jig connection Procedure :

Remove the two jumpers of JR502 and JR503 and connect the cord to the CD jig as shown in the figure below. At this time, connect the cord of the IC501 side to the output terminal for the CD jig and connect the volume side cords to the input terminal from the CD jig.

【MAIN BOARD】 (SIDE A)

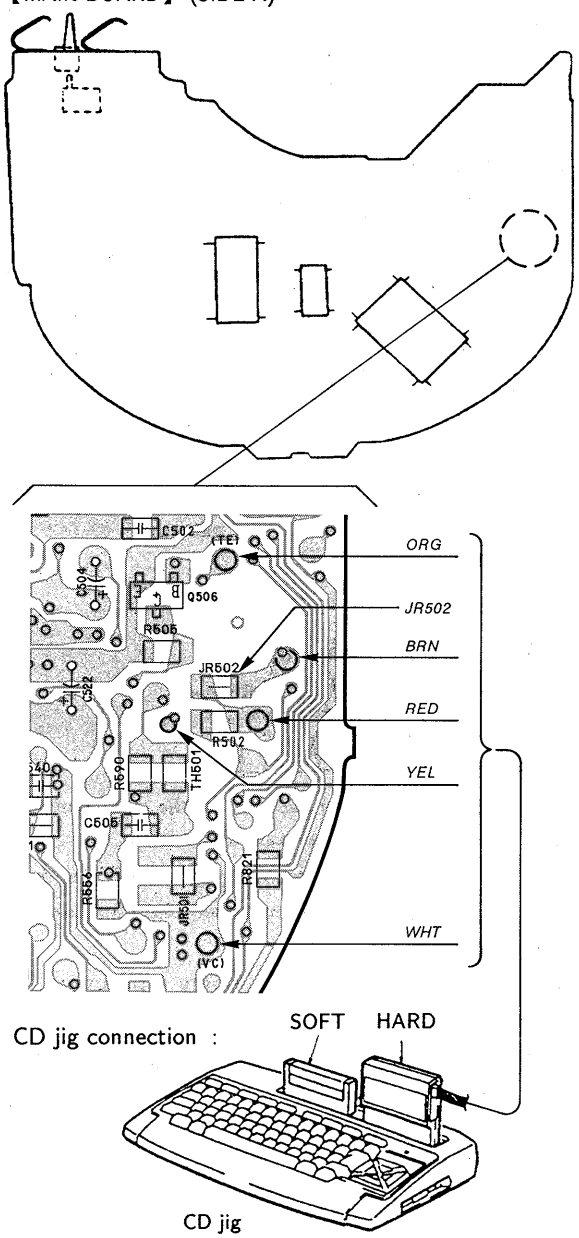

SECTION 4
DIAGRAMS

4-1. BLOCK DIAGRAMS

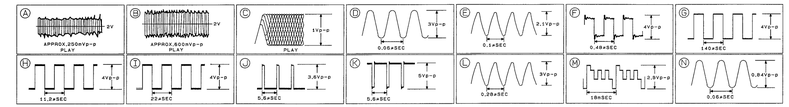

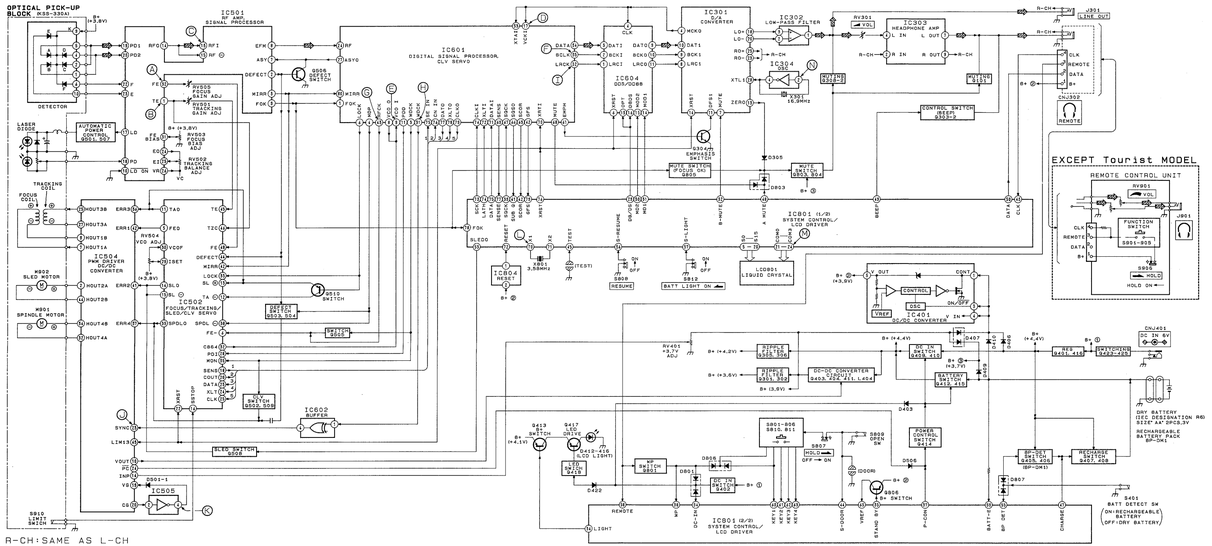

• SEMICONDUCTOR LEAD LAYOUTS

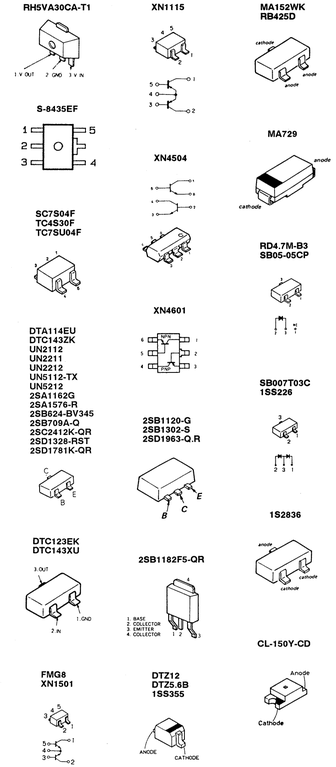

• WAVEFORMS

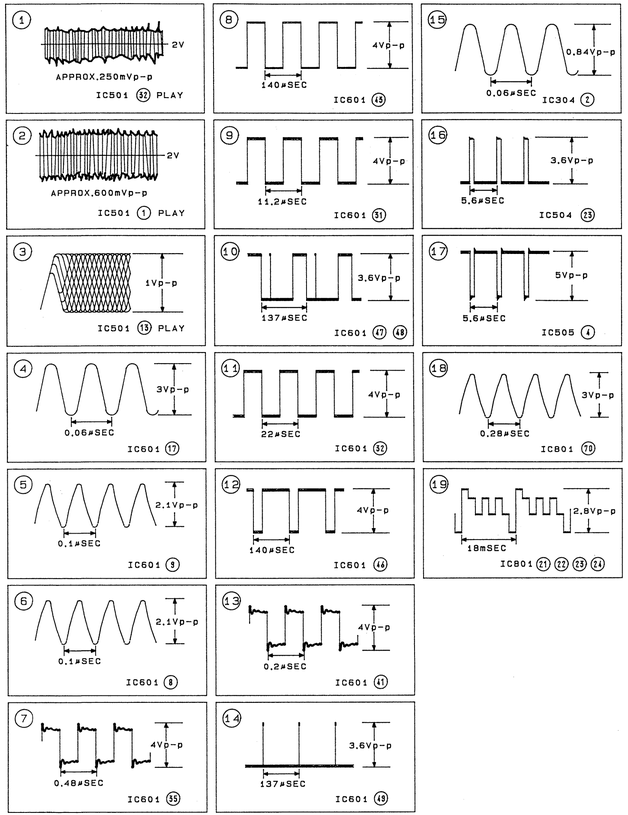

● CIRCUIT BOARDS LOCATION

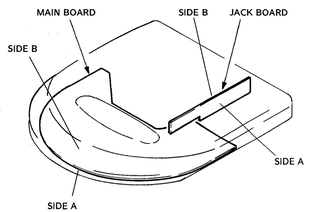

● SEMICONDUCTOR LOCATION

Ref. No.	Location	Ref. No.	Location
D301	G - 2	IC602	H - 17
D302	H - 3	IC604	H - 7
D303	G - 3	IC801	H - 18
D304	H - 3	IC804	J - 8
D305	J - 8		
D401	F - 4	Q101	H - 21
D402	E - 3	Q201	H - 21
D403	G - 5	Q301	I - 4
D404	F - 3	Q302	I - 21
D405	E - 21	Q303	H - 21
D406	G - 4	Q304	I - 6
D407	G - 4	Q305	H - 21
D408	F - 22	Q306	H - 3
D409	G - 4	Q308	I - 21
D410	F - 3	Q401	F - 21
D411	G - 21	Q402	G - 21
D412	J - 19	Q403	F - 20
D413	J - 19	Q404	F - 4
D414	J - 18	Q405	F - 22
D415	J - 17	Q406	F - 22
D416	J - 17	Q407	E - 4
D419	H - 20	Q408	E - 4
D420	J - 6	Q409	H - 5
D421	G - 21	Q410	G - 4
D422	J - 6	Q411	E - 5
D423	F - 5	Q412	G - 21
D430	B - 12	Q413	J - 6
D431	A - 12	Q414	G - 4
D432	B - 12	Q415	G - 4
D501	F - 20	Q416	F - 4
D502	G - 20	Q417	J - 6
D503	G - 20	Q418	J - 7
D504	F - 6	Q423	B - 12
D505	F - 6	Q424	B - 12
D506	F - 19	Q425	B - 13
D507	H - 7	Q501	E - 11
D801	H - 18	Q502	I - 15
D803	J - 8	Q503	G - 10
D805	J - 8	Q504	G - 10
D806	J - 6	Q505	I - 15
D807	F - 3	Q506	G - 11
		Q507	F - 11
		Q508	H - 18
IC301	H - 6	Q509	I - 15
IC302	J - 4	Q510	I - 16
IC303	I - 4		
IC304	I - 19	Q801	G - 19
IC401	F - 21	Q803	J - 20
		Q804	J - 6
IC501	G - 14	Q805	J - 8
IC502	H - 16	Q806	G - 19
IC504	G - 18		
IC505	G - 20		
IC601	I - 9		

Note:

- ○—: parts extracted from the component side.
- ○ : Through hole.
- ▒▒▒ : Pattern on the side which is seen.

4-2. PRINTED WIRING BOARDS

● Refer to page 13 for Semiconductor Lead Layouts.

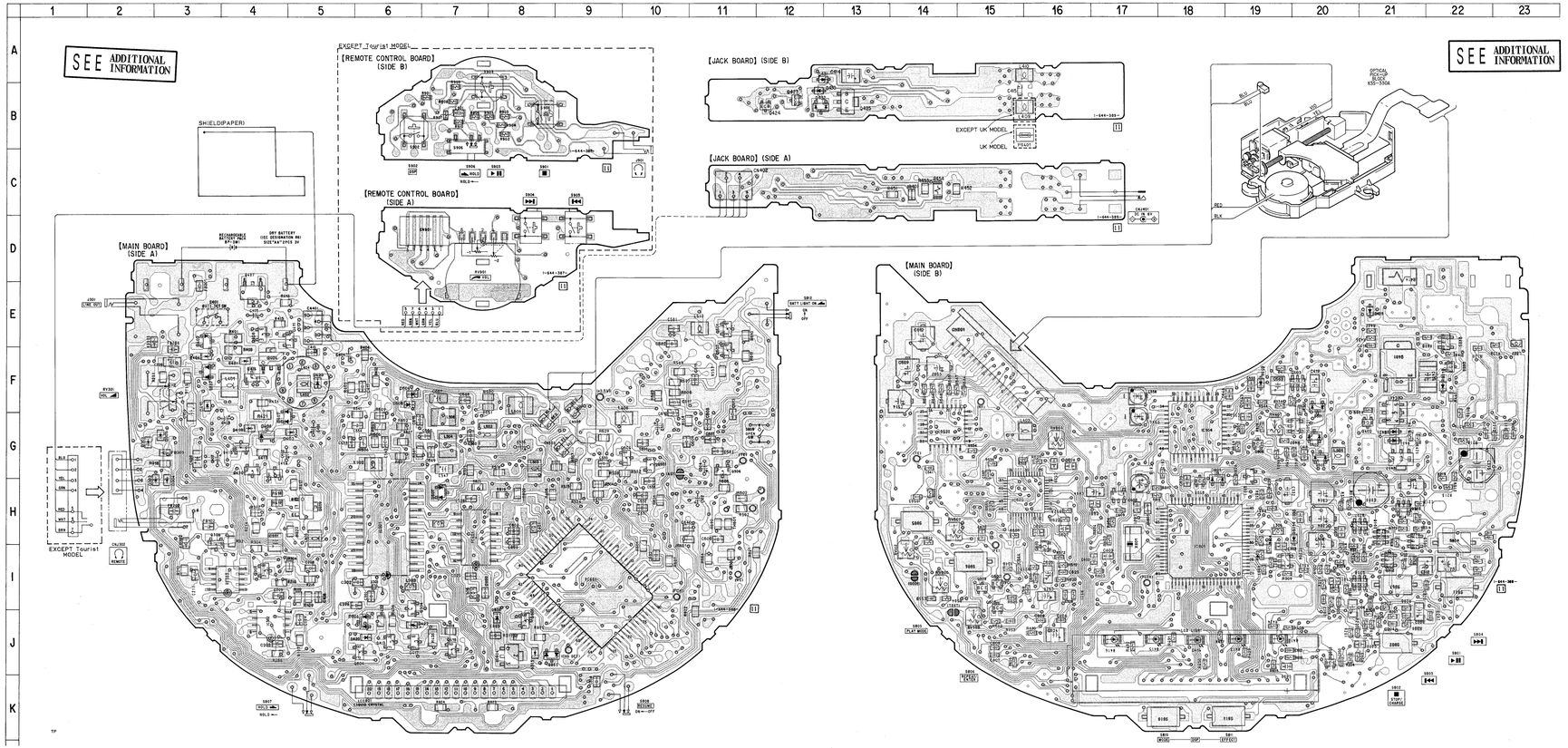

4-3. SCHEMATIC DIAGRAM

• Refer to page 14 for Waveforms.

• Refer to page 23 for IC Block Diagrams.

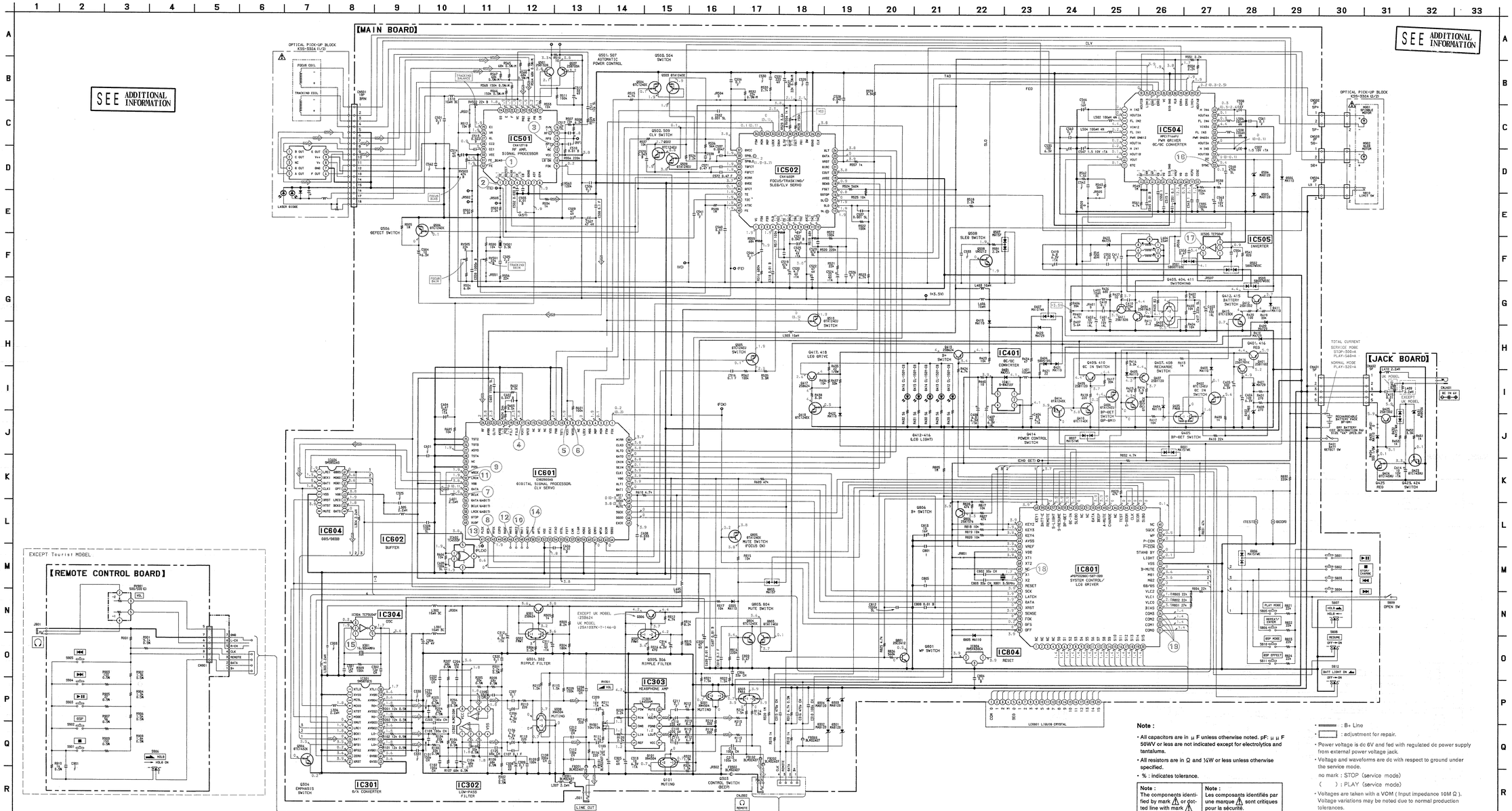

Note :

- All capacitors are in μ F unless otherwise noted. pF: μ μ F 50WV or less are not indicated except for electrolytics and tantalums.
- All resistors are in Ω and ¼W or less unless otherwise specified.
- % : indicates tolerance.

Note :	Note :
The components identified by mark ⚠ or dotted line with mark ⚠ are critical for safety. Replace only with part number specified.	Les composants identifiés par une marque ⚠ sont critiques pour la sécurité. Ne les remplacer que par une pièce portant le numéro spécifié.

- ▬▬ : B+ Line
- ▭ : adjustment for repair.
- Power voltage is dc 6V and fed with regulated dc power supply from external power voltage jack.
- Voltage and waveforms are dc with respect to ground under the service mode.
  no mark : STOP (service mode)
  ( ) : PLAY (service mode)
- Voltages are taken with a VOM (Input impedance 10M Ω). Voltage variations may be noted due to normal production tolerances.
- Waveforms are taken with a oscilloscope. Voltage variations may be noted due to normal production tolerances.
- Circled numbers refer to waveforms.
- Signal path.
  ⇨ : CD

• IC BLOCK DIAGRAMS

IC301 SM5870CS

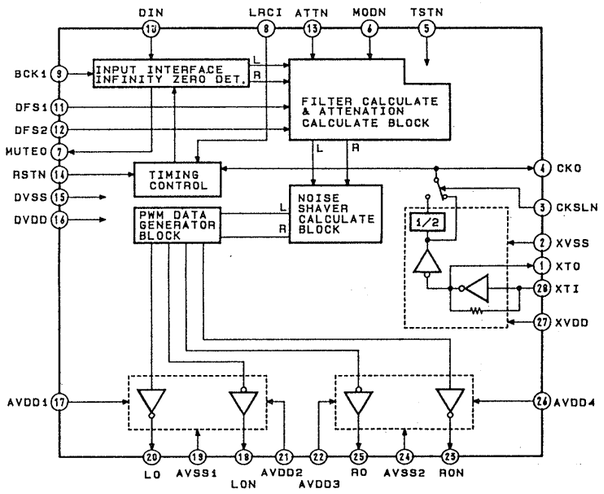

IC501 CXA1271Q

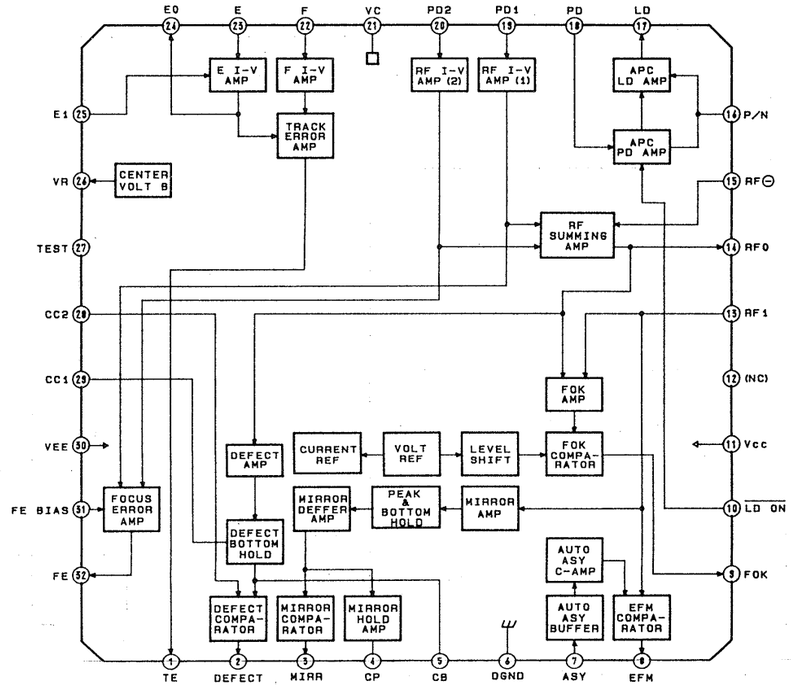

IC303 LA4534M

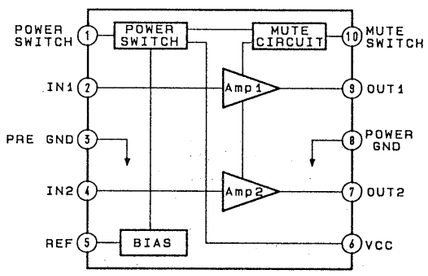

IC401 S-8435EF

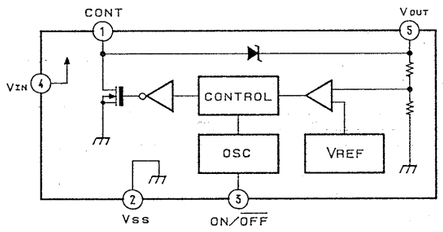

IC504 MPC1716AFU

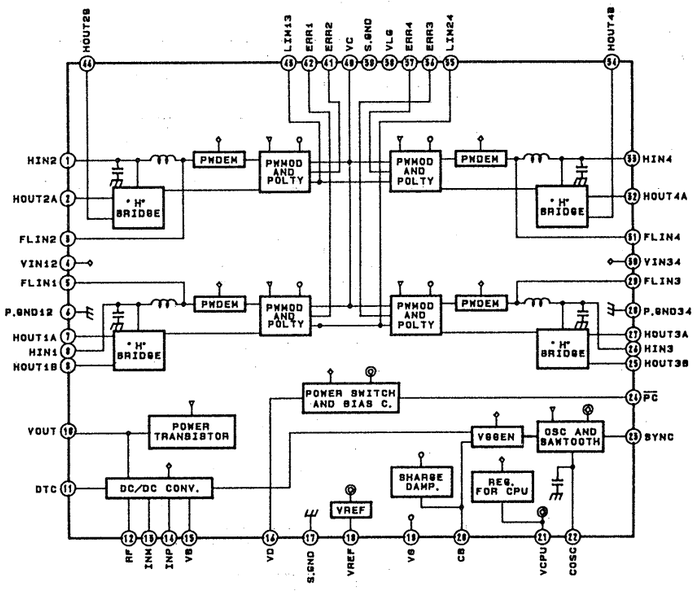

IC502 CXA1602R

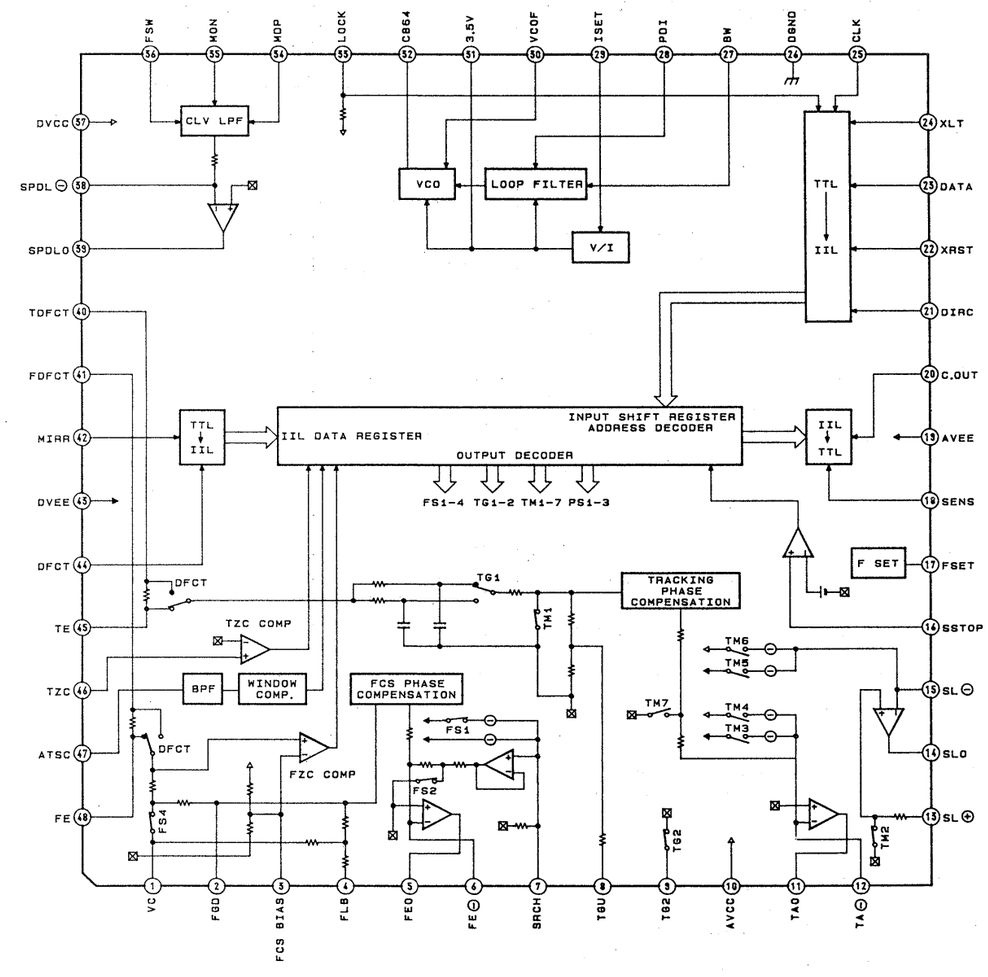

IC601 CXD2500AQ

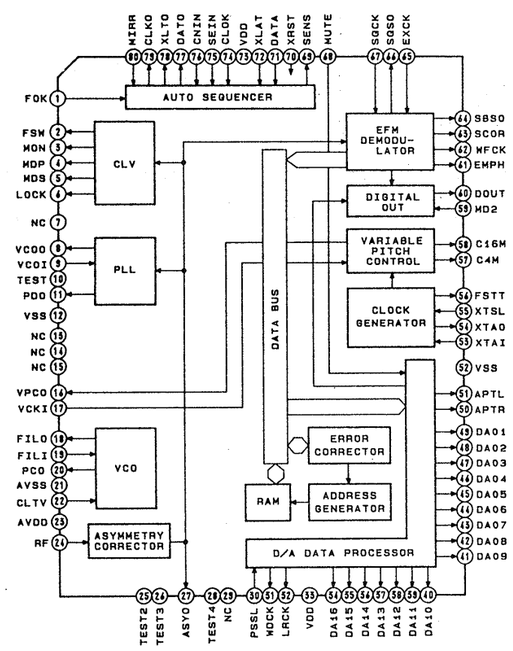

• LIQUID CRYSTAL (LCD801)

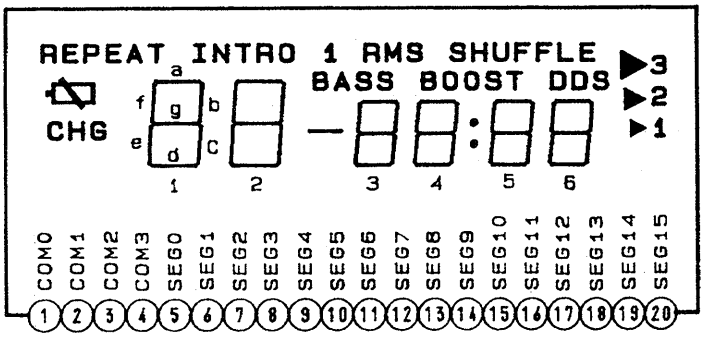

NO.	COM. 0	COM. 1	COM. 2	COM. 3
1	COM. 0			
2		COM. 1		
3			COM. 2	
4				COM. 3
5	INTRO	REPEAT		CHG
6	1f	1g	1e	1d
7	1a	1b	1c	
8	2f	2g	2e	2d
9	2a	2b	2c	
10	BASS BOOST	:	—	DDS
11	3f	3g	3e	3d
12	3a	3b	3c	
13	4f	4g	4e	4d
14	4a	4b	4c	
15	5f	5g	5e	5d
16	5a	5b	5c	
17	6f	6g	6e	6d
18	6a	6b	6c	
19	▶ (3)	▶ (2)	▶ (1)	3. 2. 1
20	RMS	1		SHUFFLE

SECTION 5
EXPLANATION OF IC TERMINALS

IC PIN FUNCTIONS

● S-8435EF (IC401) DC-DC CONVERTER

Pin No.	Pin Name	Description
2	Vss	GND terminal
5	Vout	Voltage output terminal
1	CONT	Control terminal
4	Vin	Power supply terminal
3	ON/ $\overline{\text{OFF}}$	POWER OFF terminal H : ON L : OFF

● SM5852AS-ET (IC604) DDBB/ DDS

Pin No.	Pin Name	I/ O	Description
1	LRCI	I	Sample rate (fs) clock input terminal for input data
2	BCKI	I	Bit clock input terminal
3	DATI	I	Serial data input terminal
4	CLKI	I	Clock input terminal
5	Vss	—	GND terminal
6	XRST	I	System reset (initialize) terminal ; L level-reset
7	XTST	I	Test mode terminal (Not in used) ; L level-test
8	XMUT	I	Mute terminal (Not in used) ; L level-mute
9	DATO	O	Serial data output terminal
10	BCKO	O	Bit clock output terminal
11	LRCO	O	Sample rate (fs) clock output terminal for output data
12	VDD	—	Power terminal (3.2~5.5V)
13	XHIB	I	DDBB/ DDS function select terminal ; H level=DDBB/ L level=DDS
14	MOD1	I	DDBB/DDS gain select terminal: MOD1 H L H L; MOD2 H H L L; Gain mode OFF MIN MID MAX
15	MOD2	I	
16	DB/ DS	I	DDBB/ DDS function select terminal ; H level=DDBB/ L level=DDS

● μPD75328GC-587-3B9 (IC801) SYSTEM CONTROL

Pin No.	Pin Name	I/ O	Description
1 ~ 4	NC	—	Not in used (OPEN)
5 ~ 20	S0 ~ S15	O	Segment signal output terminal
21 ~ 24	COM0 ~ COM3	O	Common signal output terminal
25	BIAS	O	LCD drive power supply bias control terminal
26 ~ 28	VLC0 ~ VLC2	—	LCD drive power supply terminal
29	DB/ DS	O	DBDS signal output terminal to SM5852AS (IC604). "H" : DBB, "L" : DDS
30	MD2	O	DBB/DDS gain selection output terminal to SM5852AS (IC604). GAIN : OFF MIN MID MAX MD1 : H L H L MD2 : H H L L
31	MD1	O	
32	B-MUTE	O	Mute control output terminal of SM5870CS (IC301).
33	VSS	—	GND terminal
34	LIGHT	O	LIGHT control terminal for LCD. "L" : LIGHT
35	STAND BY	O	Reference voltage control terminal to A/D converter (IC801) "L" : Supply
36	$\overline{\text{P-CON}}$	—	Not in used (OPEN)
37	P-CON	O	Power supply controlling output terminal. "L" : POWER ON
38	WP	I	Input terminal for reject stop mode of the system.The stop will rejected at the position of a rise of input as show in the drawing. ( )
39	SQCK	O	Serial clock signal output terminal to CXD2500AQ (IC601)
40	NC	—	Not in used (OPEN)
41	SUBQ	I	Input terminal for SUB-Q signal from CXD2500AQ (IC601)
42	SCOR	I	Input terminal for SCORE signal from CXD2500AQ (IC601)
43	CLK	I	With clock signal (to output data) entered from the remote controller (RM-DM6), data is updated upon detecting the rise of input. ( )
44	S-DOOR	I	OPEN switch (S809) input terminal. "H" : OPEN, "L" : CLOSE
45	TEST	I	Test mode terminal. "L" : Test mode at the system reset condition.
46	NC	—	Not in used (OPEN)
47	CHARGE	O	Battery (BP-DM1) charge control output terminal
48	A-MUTE	O	Analog mute control signal output terminal. "H" : MUTE
49	BEEP	O	Beep sound pulse output terminal
50	DATA	O	Serial data output terminal for the remote controller (RM-DM6)
51	NC	—	Not in used (OPEN)
52	NC	—	Not in used (OPEN)
53	SLEDO	O	Output terminal to control ON/OFF of SLO output of CXA1602R (IC502). "L" : ON, "H" : OFF
54	DC-IN	I	Input terminal to detect DC-IN. "L" : DC-IN in use, "H" : DC-IN not in use
55	BP-DET	I	BATTERY DETECT switch (S401) input terminal. (Rechargeable battery pack)
56	S-RESUME	I	RESUME switch (S808) input terminal. "L" : RESUME ON, "H" : RESUME OFF
57	S-LIGHT	I	BATT. LIGHT ON switch (S812)input terminal. "L" : ON, "H" : OFF

Pin No.	Pin Name	I/ O	Description
58	REMOTE	I	A/D input terminal to receive control signal from remote controller (RM-DM6)
59	BATT-E	I	A/D input terminal to detect the less voltage of rechargeable battery or dry battery
60	KEY1	I	A/D input terminal of ▶II switch (S801), PLAY MODE switch (S805)
61	KEY2	I	A/D input terminal for ■ switch (S802), REPEAT/ENTER switch (S806)
62	KEY3	I	A/D input terminal for ⏮ switch (S803), DSP MODE switch (S810)
63	KEY4	I	A/D input terminal for ⏭ switch (S804), DSP EFFECT switch (S811)
64	AVSS		ANALOG GND terminal
65	VREF	I	Reference voltage input terminal to A/D converter (IC801)
66	VDD	—	Power supply terminal
67	XT1	I	Subsystem clock input terminal
68	XT2		Not in used (OPEN)
69	NC		Not in used (B+)
70	X1	I	Mainsystem clock input terminal (3.58MHz)
71	X2	O	Mainsystem clock output terminal (3.58MHz)
72	RESET	I	System reset input. "L" : level activates resetting
73	SCK	O	CLOCK signal output terminal upon transferring serial data to CXD2500AQ (IC601)
74	LATCH	O	LATCH signal output terminal upon transferring serial data to CXD2500AQ (IC601)
75	DATA	O	Serial data output terminal to CXD2500AQ (IC601)
76	XRST	O	Reset signal output terinal to CXD2500AQ (IC601),SM5852AS (IC604), SM5870CS (IC301), CXA1602R (IC502) and MPC1716AFU (IC504). Each IC is reset when "L" level is issued.
77	SENSE	I	Input terminal to receive SENSE signal from CXD2500AQ (IC601)
78	FOK	I	Input terminal to receive FOK signal from CXA1271Q (IC501)
79	GFS	I	Input terminal to receive GFS signal from CXD2500AQ (IC601)
80	OFF	I	Not in used

SEE ADDITIONAL INFORMATION

SECTION 6
EXPLODED VIEWS

NOTE:
- -XX, -X mean standardized parts, so they may have some differences from the original one.
- The construction parts of an assembled part are indicated with a collation number in the remark column.
- Color indication of Appearance Parts
  Example:
  KNOB, BALANCE (WHITE).... (RED)
  ↑ Parts color ↑ Cabinet's color
- Items marked "*" are not stocked since they are seldom required for routine service. Some delay should be anticipated when ordering these items.
- The mechanical parts with no reference number in the exploded views are not supplied.
- Hardware (# mark) list is given in the last of this parts list.

The components identified by mark ⚠ or dotted line with mark ⚠ are critical for safety.
Replace only with part number specified.

Les composants identifiés par une marque ⚠ sont critiques pour la sécurité.
Ne les remplacer que par une pièce portant le numéro spécifié.

6-1. CABINET SECTION

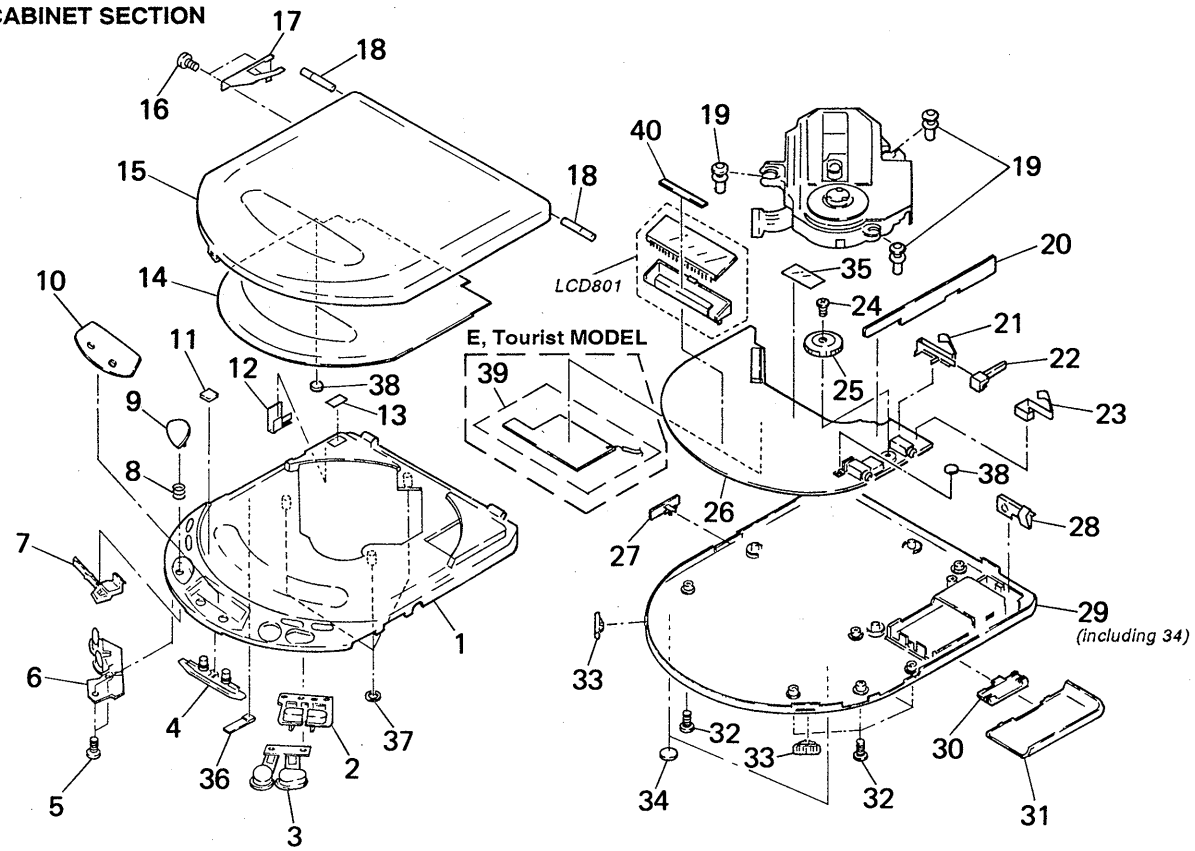

Ref. No.	Part No.	Description	Remark
1	4-952-711-01	CABINET (UPPER)	
2	4-952-694-01	BUTTON (F/R)	
3	4-952-693-01	BUTTON (S/P)	
4	4-952-708-01	BUTTON (DSP)	
5	3-318-203-71	SCREW (B1.7X5), TAPPING	
6	4-952-697-01	BUTTON (MODE)	
7	4-952-696-01	LEVER, LOCK	
8	4-952-698-01	SPRING, COMPRESSION	
9	4-952-695-01	BUTTON (OPEN)	
10	4-952-699-01	WINDOW (LCD)	
* 11	4-945-531-01	CUSHION	
12	4-952-692-01	STOPPER	
13	9-911-863-XX	SHEET	
14	4-952-690-01	REINFORCEMENT	
15	X-4942-745-1	LID ASSY, UPPER	
16	3-704-197-32	SCREW (M1.4X3.0)	
17	4-952-691-01	SPRING, ARM	
18	4-931-825-01	SHAFT (FULCRUM)	
19	4-947-759-01	INSULATOR (I)	
* 20	1-644-389-11	JACK BOARD	
21	4-952-702-01	TERMINAL BOARD (-), BATTERY	
22	4-944-363-01	SEPARATOR	
23	4-952-701-01	TERMINAL BOARD (+), BATTERY	
24	3-345-648-01	SCREW (M1.4X3)	
25	4-938-812-01	KNOB (VOLUME)	
26	A-3275-452-A	MAIN BOARD, COMPLETE (UK)	
26	A-3275-454-A	MAIN BOARD, COMPLETE (US, Canadian, AEP, E, Tourist)	
27	4-952-707-01	KNOB (LIGHT)	
28	4-952-703-01	TERMINAL BOARD (RELAY), BATTERY	
29	X-4942-746-1	CABINET (LOWER) ASSY	
30	4-952-705-01	HINGE, BATTERY CASE LID	
31	4-952-704-01	LID, BATTERY CASE	
32	3-336-395-01	SCREW (B2X10) (G), TAPPING	
33	4-952-706-01	KNOB (HOLD)	
34	4-912-641-01	FOOT, RUBBER	
* 35	3-898-436-01	SHEET (A), INSULATING	
* 36	4-954-902-01	SHEET, BLIND	
* 37	4-918-876-01	SPACER	
* 38	4-924-197-02	SPACER (DIA. 3)	
* 39	A-3263-103-A	PAPER ASSY (60), SHIELD (E, Tourist)	
* 40	4-954-844-01	SPACER	
LCD801	1-809-733-11	DISPLAY PANEL, LIQUID CRISTAL	

SEE ADDITIONAL INFORMATION

6-2. OPTICAL PICK-UP MECHANISM SECTION (KSM-330AAN(S))

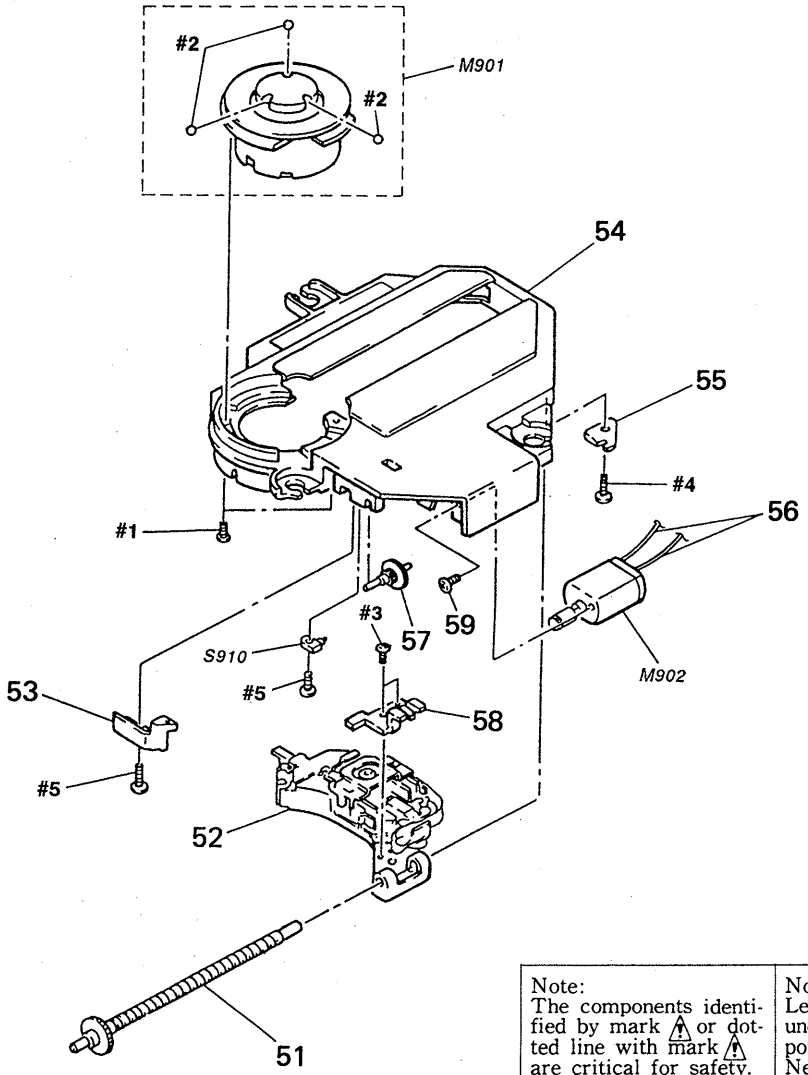

Note:	Note:
The components identified by mark ⚠ or dotted line with mark ⚠ are critical for safety. Replace only with part number specified.	Les composants identifiés par une marque ⚠ sont critiques pour la sécurité. Ne les remplacer que par une pièce portant le numéro spécifié.

Ref. No.	Part No.	Description	Remark
51	X-2625-173-2	SCREW ASSY, SLED	
⚠52	8-848-212-11	DEVICE, OPTICAL KSS-330A	
53	2-625-412-02	SPRING, SLED	
54	2-625-415-02	CHASSIS, MD	
55	2-625-411-01	RETAINER, SHAFT	
56	1-948-418-21	HARNESS	
57	2-625-410-01	GEAR (B)	
58	2-625-414-02	RACK	
59	3-732-988-01	SCREW (M2X2.5)	
M901	X-2625-219-1	MOTOR ASSY (K), T.T.	
M902	X-2625-171-2	MOTOR ASSY, SLED	
S910	1-570-771-11	SWITCH (LIMIT SW)	

6-3. REMOTE CONTROL UNIT (RM-DM6) SECTION
(Except for Tourist model)

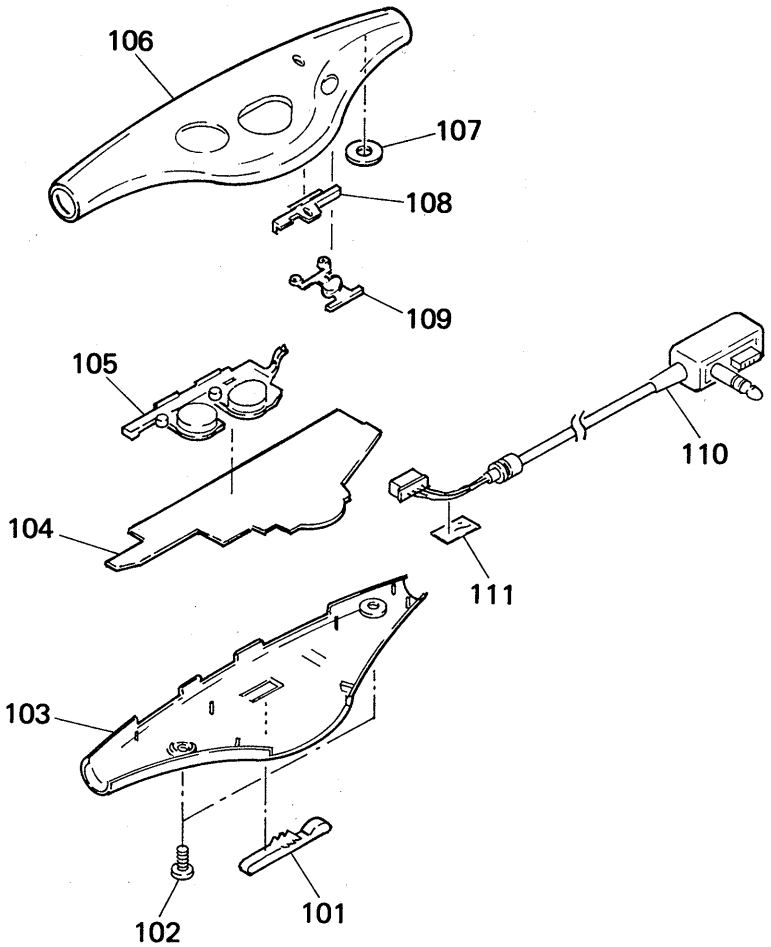

Ref. No.	Part No.	Description	Remark
101	4-952-709-01	CLIP (US, Canadian, AEP, UK, E)	
102	3-318-203-71	SCREW (B1.7X5), TAPPING (US, Canadian, AEP, UK, E)	
103	4-952-713-01	CASE (LOWER) (US, Canadian, AEP, UK, E)	
104	A-3275-453-A	PC BOARD ASSY, REMOTE CONTROL (UK)	
104	A-3275-455-A	PC BOARD ASSY, REMOTE CONTROL (US, Canadian, AEP, E)	
105	4-952-717-01	BUTTON (PS AMS) (US, Canadian, AEP, UK, E)	
106	4-952-716-01	CASE (UPPER) (US, Canadian, AEP, UK, E)	
107	4-612-010-01	WASHER (US, Canadian, AEP, UK, E)	
108	4-952-714-01	KNOB (R-HOLD) (US, Canadian, AEP, UK, E)	
109	4-952-715-01	BUTTON (R-DSP) (US, Canadian, AEP, UK, E)	
110	1-696-047-11	CORD (WITH PLUG) (CONNECTOR) (US, Canadian, AEP, UK, E)	
111	3-846-312-00	SPACER (US, Canadian, AEP, UK, E)	

SEE ADDITIONAL INFORMATION

SECTION 7
ELECTRICAL PARTS LIST

MAIN

NOTE:
- Due to standardization, replacements in the parts list may be different from the parts specified in the diagrams or the components used on the set.
- -XX and -X mean standardized parts, so they may have some difference from the original one.
- RESISTORS
  All resistors are in ohms.
  METAL:Metal-film resistor.
  METAL OXIDE: Metal oxide-film resistor.
  F:nonflammable
- Items marked "*" are not stocked since they are seldom required for routine service. Some delay should be anticipated when ordering these items.
- SEMICONDUCTORS
  In each case, u:μ, for example:
  uA ..: μA.. uPA..: μPA..
  uPB..: μPB.. uPC..: μPC.. uPD..: μPD..
- CAPACITORS
  uF: μF
- COILS
  uH: μH

When indicating parts by reference number, please include the board.

The components identified by mark ⚠ or dotted line with mark ⚠ are critical for safety. Replace only with part number specified.

Les composants identifiés par une marque ⚠ sont critiques pour la sécurité.
Ne les remplacer que par une pièce portant le numéro spécifié.

Ref. No.	Part No.	Description			Remark
	A-3275-452-A	MAIN BOARD, COMPLETE (UK)			
	A-3275-454-A	MAIN BOARD, COMPLETE (US, Canadian, AEP, E, Tourist)			
		**********			
	3-345-648-01	SCREW (M1.4X3)			
	4-938-812-01	KNOB (VOLUME)			
	4-944-363-01	SEPARATOR			
	4-952-701-01	TERMINAL BOARD (+), BATTERY			
	4-952-702-01	TERMINAL BOARD (-), BATTERY			
		< CAPACITOR >			
C101	1-163-121-00	CERAMIC CHIP	150PF	5%	50V
C102	1-162-927-11	CERAMIC CHIP	100PF	5%	50V
C103	1-162-927-11	CERAMIC CHIP	100PF	5%	50V
C104	1-163-113-00	CERAMIC CHIP	68PF	5%	50V
C105	1-162-925-11	CERAMIC CHIP	68PF	5%	50V
C106	1-135-181-21	TANTALUM CHIP	4.7uF	20%	6.3V
C107	1-164-156-11	CERAMIC CHIP	0.1uF		25V
C108	1-163-263-11	CERAMIC CHIP	330PF	5%	50V
C109	1-135-091-00	TANTALUM CHIP	1uF	20%	16V
C110	1-126-246-11	ELECT CHIP	220uF	20%	4V
C111	1-164-156-11	CERAMIC CHIP	0.1uF		25V
C112	1-162-927-11	CERAMIC CHIP	100PF	5%	50V
C113	1-162-927-11	CERAMIC CHIP	100PF	5%	50V
C201	1-163-121-00	CERAMIC CHIP	150PF	5%	50V
C202	1-163-251-11	CERAMIC CHIP	100PF	5%	50V
C203	1-162-927-11	CERAMIC CHIP	100PF	5%	50V
C204	1-162-925-11	CERAMIC CHIP	68PF	5%	50V
C205	1-162-925-11	CERAMIC CHIP	68PF	5%	50V
C206	1-135-181-21	TANTALUM CHIP	4.7uF	20%	6.3V
C207	1-164-156-11	CERAMIC CHIP	0.1uF		25V
C208	1-163-263-11	CERAMIC CHIP	330PF	5%	50V
C209	1-135-091-00	TANTALUM CHIP	1uF	20%	16V
C210	1-126-246-11	ELECT CHIP	220uF	20%	4V
C211	1-163-038-00	CERAMIC CHIP	0.1uF		25V
C212	1-162-927-11	CERAMIC CHIP	100PF	5%	50V
C213	1-162-927-11	CERAMIC CHIP	100PF	5%	50V
C301	1-163-229-11	CERAMIC CHIP	12PF	5%	50V
C302	1-163-229-11	CERAMIC CHIP	12PF	5%	50V
C303	1-164-346-11	CERAMIC CHIP	1uF		16V
C304	1-126-607-11	ELECT CHIP	47uF	20%	4V
C305	1-126-607-11	ELECT CHIP	47uF	20%	4V
C306	1-163-239-11	CERAMIC CHIP	33PF	5%	50V
C308	1-126-207-11	ELECT CHIP	33uF	20%	4V
C309	1-163-038-00	CERAMIC CHIP	0.1uF		25V
C310	1-162-927-11	CERAMIC CHIP	100PF	5%	50V
C311	1-135-202-21	TANTAL. CHIP	22uF	20%	4V
C312	1-135-157-21	TANTALUM CHIP	10uF	20%	6.3V
C313	1-135-157-21	TANTALUM CHIP	10uF	20%	6.3V
C314	1-124-778-00	ELECT CHIP	22uF	20%	6.3V
C315	1-164-315-11	CERAMIC CHIP	470PF	5%	50V
C316	1-164-315-11	CERAMIC CHIP	470PF	5%	50V
C320	1-164-156-11	CERAMIC CHIP	0.1uF		25V
C325	1-164-346-11	CERAMIC CHIP	1uF		16V
C328	1-163-117-00	CERAMIC CHIP	100PF	5%	50V
C330	1-164-346-11	CERAMIC CHIP	1uF		16V
C331	1-164-346-11	CERAMIC CHIP	1uF		16V
C332	1-126-607-11	ELECT CHIP	47uF	20%	4V
C401	1-127-561-11	ELECT(SOLID)	33uF	20%	10V
C402	1-127-561-11	ELECT(SOLID)	33uF	20%	10V
C403	1-127-561-11	ELECT(SOLID)	33uF	20%	10V
C404	1-124-584-00	ELECT	100uF	20%	10V
C405	1-128-057-11	ELECT	330uF	20%	6.3V
C406	1-135-162-21	TANTALUM CHIP	33uF	20%	6.3V
C407	1-124-584-00	ELECT	100uF	20%	10V
C408	1-135-211-11	TANTAL. CHIP	6.8uF	20%	6.3V
C410	1-163-133-00	CERAMIC CHIP	470PF	5%	50V
C411	1-164-156-11	CERAMIC CHIP	0.1uF		25V
C417	1-163-125-00	CERAMIC CHIP	220PF	5%	50V
C418	1-164-004-11	CERAMIC CHIP	0.1uF	10%	25V
C419	1-135-211-11	TANTAL. CHIP	6.8uF	20%	6.3V
C501	1-163-038-00	CERAMIC CHIP	0.1uF		25V
C502	1-163-989-11	CERAMIC CHIP	0.033uF	10%	25V
C503	1-164-232-11	CERAMIC CHIP	0.01uF		50V
C504	1-126-157-11	ELECT	10uF	20%	16V
C505	1-164-505-11	CERAMIC CHIP	2.2uF		16V
C506	1-163-038-00	CERAMIC CHIP	0.1uF		25V
C507	1-126-607-11	ELECT CHIP	47uF	20%	4V
C508	1-163-038-00	CERAMIC CHIP	0.1uF		25V
C509	1-126-607-11	ELECT CHIP	47uF	20%	4V
C510	1-164-232-11	CERAMIC CHIP	0.01uF		50V

SEE ADDITIONAL INFORMATION

MAIN

Ref. No.	Part No.	Description			Remark
C511	1-163-095-00	CERAMIC CHIP	12PF	5%	50V
C512	1-126-207-11	ELECT CHIP	33uF	20%	4V
C513	1-163-037-11	CERAMIC CHIP	0.022uF	10%	25V
C514	1-126-607-11	ELECT CHIP	47uF	20%	4V
C515	1-164-346-11	CERAMIC CHIP	1uF		16V
C516	1-164-156-11	CERAMIC CHIP	0.1uF		25V
C517	1-163-085-00	CERAMIC CHIP	2PF		50V
C518	1-162-970-11	CERAMIC CHIP	0.01uF	10%	25V
C519	1-162-949-11	CERAMIC CHIP	47PF	5%	50V
C520	1-135-151-21	TANTALUM CHIP	4.7uF	20%	4V
C521	1-163-809-11	CERAMIC CHIP	0.047uF	10%	25V
C522	1-126-154-11	ELECT	47uF	20%	6.3V
C523	1-162-949-11	CERAMIC CHIP	47PF	5%	50V
C524	1-135-202-21	TANTAL. CHIP	22uF	20%	4V
C525	1-135-151-21	TANTALUM CHIP	4.7uF	20%	4V
C526	1-164-156-11	CERAMIC CHIP	0.1uF		25V
C527	1-163-141-00	CERAMIC CHIP	0.001uF	5%	50V
C528	1-163-809-11	CERAMIC CHIP	0.047uF	10%	25V
C529	1-164-346-11	CERAMIC CHIP	1uF		16V
C530	1-164-346-11	CERAMIC CHIP	1uF		16V
C531	1-124-434-00	ELECT	220uF	20%	4V
C532	1-163-141-00	CERAMIC CHIP	0.001uF	5%	50V
C533	1-164-346-11	CERAMIC CHIP	1uF		16V
C535	1-124-584-00	ELECT	100uF	20%	10V
C536	1-163-038-00	CERAMIC CHIP	0.1uF		25V
C537	1-162-968-11	CERAMIC CHIP	0.0047uF	10%	50V
C538	1-164-346-11	CERAMIC CHIP	1uF		16V
C540	1-164-232-11	CERAMIC CHIP	0.01uF		50V
C541	1-164-156-11	CERAMIC CHIP	0.1uF		25V
C542	1-164-346-11	CERAMIC CHIP	1uF		16V
C543	1-164-346-11	CERAMIC CHIP	1uF		16V
C544	1-164-156-11	CERAMIC CHIP	0.1uF		25V
C546	1-128-004-11	ELECT CHIP	10uF	20%	16V
C547	1-135-148-21	TANTAL. CHIP	1.5uF	20%	10V
C548	1-163-133-00	CERAMIC CHIP	470PF	5%	50V
C549	1-164-232-11	CERAMIC CHIP	0.01uF		50V
C550	1-164-346-11	CERAMIC CHIP	1uF		16V
C551	1-164-156-11	CERAMIC CHIP	0.1uF		25V
C552	1-164-222-11	CERAMIC CHIP	0.22uF		25V
C553	1-164-005-11	CERAMIC CHIP	0.47uF		25V
C554	1-164-346-11	CERAMIC CHIP	1uF		16V
C555	1-163-141-00	CERAMIC CHIP	0.001uF	5%	50V
C557	1-135-148-21	TANTAL. CHIP	1.5uF	20%	10V
C558	1-128-004-11	ELECT CHIP	10uF	20%	16V
C559	1-162-964-11	CERAMIC CHIP	0.001uF	10%	50V
C560	1-163-038-00	CERAMIC CHIP	0.1uF		25V
C561	1-163-038-00	CERAMIC CHIP	0.1uF		25V
C562	1-164-346-11	CERAMIC CHIP	1uF		16V
C563	1-135-216-11	TANTALUM CHIP	10uF	20%	10V
C570	1-163-809-11	CERAMIC CHIP	0.047uF	10%	25V
C571	1-164-005-11	CERAMIC CHIP	0.47uF		25V
C572	1-164-005-11	CERAMIC CHIP	0.47uF		25V
C601	1-164-346-11	CERAMIC CHIP	1uF		16V
C602	1-163-809-11	CERAMIC CHIP	0.047uF	10%	25V
C603	1-163-145-00	CERAMIC CHIP	0.0015uF	5%	50V
C604	1-135-145-11	TANTALUM CHIP	0.47uF	10%	35V
C605	1-162-953-11	CERAMIC CHIP	100PF	5%	50V
C606	1-162-970-11	CERAMIC CHIP	0.01uF	10%	25V
C607	1-162-970-11	CERAMIC CHIP	0.01uF	10%	25V
C608	1-164-677-11	CERAMIC CHIP	0.033uF	10%	16V
C609	1-164-232-11	CERAMIC CHIP	0.01uF		50V
C801	1-164-346-11	CERAMIC CHIP	1uF		16V
C802	1-163-239-11	CERAMIC CHIP	33PF	5%	50V
C803	1-163-239-11	CERAMIC CHIP	33PF	5%	50V
C804	1-164-004-11	CERAMIC CHIP	0.1uF	10%	25V
C805	1-164-346-11	CERAMIC CHIP	1uF		16V
C808	1-162-970-11	CERAMIC CHIP	0.01uF	10%	25V
C809	1-164-005-11	CERAMIC CHIP	0.47uF		25V
C810	1-164-156-11	CERAMIC CHIP	0.1uF		25V
C812	1-164-357-11	CERAMIC CHIP	1000PF	5%	50V
C813	1-128-004-11	ELECT CHIP	10uF	20%	16V

< CONNECTOR >

* CN401	1-580-712-21	CONNECTOR, BOARD TO BOARD 5P	
* CN501	1-695-154-11	SOCKET, CONNECTOR 18P	
CN502	1-566-757-11	PIN, CONNECTOR (PC BOARD) 2P	
CN503	1-566-757-11	PIN, CONNECTOR (PC BOARD) 2P	
CN504	1-566-757-11	PIN, CONNECTOR (PC BOARD) 2P	

< JACK >

CNJ302	1-580-680-11	JACK (REMOTE)	

< DIODE >

D301	8-719-977-34	DIODE	DTZ12
D302	8-719-977-34	DIODE	DTZ12
D303	8-719-977-34	DIODE	DTZ12
D304	8-719-977-34	DIODE	DTZ12
D305	8-719-988-62	DIODE	1SS355
D401	8-719-420-51	DIODE	MA729
D402	8-719-105-74	DIODE	RD4.7M-B3
D403	8-719-988-62	DIODE	1SS355
D404	8-719-988-62	DIODE	1SS355
D405	8-719-988-62	DIODE	1SS355
D406	8-719-938-75	DIODE	SB05-05CP
D407	8-719-104-34	DIODE	1S2836
D408	8-719-420-51	DIODE	MA729
D409	8-719-420-51	DIODE	MA729
D410	8-719-420-51	DIODE	MA729

SEE ADDITIONAL INFORMATION

MAIN

Ref. No.	Part No.	Description	Remark
D411	8-719-988-62	DIODE 1SS355	
D412	8-719-987-41	LED CL-150Y-CD (LCD LIGHT)	
D413	8-719-987-41	LED CL-150Y-CD (LCD LIGHT)	
D414	8-719-987-41	LED CL-150Y-CD (LCD LIGET)	
D415	8-719-987-41	LED CL-150Y-CD (LCD LIGHT)	
D416	8-719-987-41	LED CL-150Y-CD (LCD LIGHT)	
D419	8-719-988-62	DIODE 1SS355	
D420	8-719-420-51	DIODE MA729	
D421	8-719-988-62	DIODE 1SS355	
D422	8-719-988-62	DIODE 1SS355	
D423	8-719-420-51	DIODE MA729	
D501	8-719-989-73	DIODE SB007T03C	
D502	8-719-991-75	DIODE RB425D	
D503	8-719-991-75	DIODE RB425D	
D504	8-719-977-34	DIODE DTZ12	
D505	8-719-977-34	DIODE DTZ12	
D506	8-719-988-62	DIODE 1SS355	
D507	8-719-800-76	DIODE 1SS226	
D801	8-719-400-18	DIODE MA152WK	
D803	8-719-800-76	DIODE 1SS226	
D805	8-719-988-62	DIODE 1SS355	
D806	8-719-400-18	DIODE MA152WK	
D807	8-719-400-18	DIODE MA152WK	
		< FERRITE BEAD >	
FB101	1-414-135-11	INDUCTOR CHIP 0UH	
FB102	1-414-135-11	INDUCTOR CHIP 0UH	
FB201	1-414-135-11	INDUCTOR CHIP 0UH	
FB202	1-414-135-11	INDUCTOR CHIP 0UH	
FB301	1-414-135-11	INDUCTOR CHIP 0UH	
FB302	1-414-135-11	INDUCTOR CHIP 0UH	
FB303	1-414-135-11	INDUCTOR CHIP 0UH	
		< IC >	
IC301	8-759-075-45	IC SM5870CS	
IC302	8-759-710-55	IC NJM2100M	
IC303	8-759-048-93	IC LA4534M	
IC304	8-759-243-19	IC TC7SU04F	
IC401	8-759-075-43	IC S-8435EF	
IC501	8-752-033-55	IC CXA1271Q	
IC502	8-752-055-94	IC CXA1602R	
IC504	8-759-039-13	IC MPC1716AFU	
IC505	8-759-031-84	IC SC7S04F	
IC601	8-752-337-26	IC CXD2500AQ	
IC602	8-759-234-13	IC TC4S30F	
IC604	8-759-048-91	IC SM5852AS-ET	
IC801	8-759-081-28	IC uPD75328GC-587-3B9	
IC804	8-759-980-28	IC RH5VA30CA-T1	

Ref. No.	Part No.	Description	Remark
		< JACK >	
J301	1-695-061-11	JACK (LINE OUT)	
		< JUMPER RESISTOR >	
JR302	1-216-295-00	METAL CHIP 0 5% 1/10W	
JR304	1-216-295-00	METAL CHIP 0 5% 1/10W	
JR401	1-216-864-11	METAL CHIP 0 5% 1/16W	
JR501	1-216-295-00	METAL CHIP 0 5% 1/10W	
JR502	1-216-295-00	METAL CHIP 0 5% 1/10W	
JR503	1-216-864-11	METAL CHIP 0 5% 1/16W	
JR504	1-216-295-00	METAL CHIP 0 5% 1/10W	
JR505	1-216-295-00	METAL CHIP 0 5% 1/10W	
JR506	1-216-295-00	METAL CHIP 0 5% 1/10W	
JR507	1-216-864-11	METAL CHIP 0 5% 1/16W	
JR509	1-216-295-00	METAL CHIP 0 5% 1/10W	
JR551	1-216-295-00	METAL CHIP 0 5% 1/10W	
JR801	1-216-295-00	METAL CHIP 0 5% 1/10W	
		< COIL >	
L301	1-412-029-11	INDUCTOR CHIP 10uH	
L302	1-412-029-11	INDUCTOR CHIP 10uH	
L303	1-410-997-31	INDUCTOR CHIP 2.2uH	
L304	1-410-997-31	INDUCTOR CHIP 2.2uH	
L305	1-410-997-31	INDUCTOR CHIP 2.2uH	
L306	1-410-997-31	INDUCTOR CHIP 2.2uH	
L307	1-410-997-31	INDUCTOR CHIP 2.2uH	
L401	1-412-039-51	INDUCTOR CHIP 100uH	
L402	1-412-029-11	INDUCTOR CHIP 10uH	
L403	1-412-029-11	INDUCTOR CHIP 10uH	
L404	1-450-401-11	TRANSFORMER, CONVERTER DC-DC	
L405	1-412-029-11	INDUCTOR CHIP 10uH	
L406	1-412-029-11	INDUCTOR CHIP 10uH	
L502	1-412-039-51	INDUCTOR CHIP 100uH	
L503	1-412-029-11	INDUCTOR CHIP 10uH	
L504	1-412-039-51	INDUCTOR CHIP 100uH	
L506	1-412-039-51	INDUCTOR CHIP 100uH	
L508	1-412-039-51	INDUCTOR CHIP 100uH	
L510	1-412-029-11	INDUCTOR CHIP 10uH	
L601	1-410-997-31	INDUCTOR CHIP 2.2uH	
		< LIQUID CRYSTAL DISPLAY >	
LCD801	1-809-733-11	DISPLAY PANEL, LIQUID CRISTAL	
		< TRANSISTOR >	
Q101	8-729-425-18	TRANSISTOR XN4504	
Q201	8-729-425-18	TRANSISTOR XN4504	
Q301	8-729-141-48	TRANSISTOR 2SB624-BV345	
Q302	8-729-402-13	TRANSISTOR XN1501-TX	

SEE ADDITIONAL INFORMATION

MAIN

Ref. No.	Part No.	Description		Remark
Q303	8-729-403-45	TRANSISTOR	XN1115	
Q304	8-729-907-53	TRANSISTOR	DTC143ZK	
Q305	8-729-402-13	TRANSISTOR	XN1501	
Q306	8-729-141-48	TRANSISTOR	2SB624-BV345	(US, Canadian, AEP, E, Tourist)
Q306	8-729-216-22	TRANSISTOR	2SA1162-G (UK)	
Q308	8-729-425-18	TRANSISTOR	XN4504	
Q401	8-729-921-93	TRANSISTOR	2SB1182F5-QR	
Q402	8-729-402-45	TRANSISTOR	UN5212	
Q403	8-729-402-84	TRANSISTOR	XN4601	
Q404	8-729-923-36	TRANSISTOR	2SD1963-Q. R	
Q405	8-729-924-79	TRANSISTOR	FMG8	
Q406	8-729-810-13	TRANSISTOR	2SA1677	
Q407	8-729-806-76	TRANSISTOR	2SB1120-G	
Q408	8-729-424-59	TRANSISTOR	UN2212	
Q409	8-729-806-76	TRANSISTOR	2SB1120-G	
Q410	8-729-421-22	TRANSISTOR	UN2211	
Q411	8-729-420-74	TRANSISTOR	2SD1328-RST	
Q412	8-729-822-60	TRANSISTOR	2SB1302-S	
Q413	8-729-141-48	TRANSISTOR	2SB624-BV345	
Q414	8-729-424-12	TRANSISTOR	UN2112	
Q415	8-729-920-65	TRANSISTOR	DTC123EK	
Q416	8-729-921-73	TRANSISTOR	2SD1781K-QR	
Q417	8-729-141-48	TRANSISTOR	2SB624-BV345	
Q418	8-729-424-59	TRANSISTOR	UN2212	
Q501	8-729-420-74	TRANSISTOR	2SD1328-RST	
Q502	8-729-402-45	TRANSISTOR	UN5212	
Q503	8-729-424-12	TRANSISTOR	UN2112	
Q504	8-729-424-59	TRANSISTOR	UN2212	
Q505	8-729-402-45	TRANSISTOR	UN5212	
Q506	8-729-424-59	TRANSISTOR	UN2212	
Q507	8-729-422-36	TRANSISTOR	2SB709A-Q	
Q508	8-729-402-45	TRANSISTOR	UN5212	
Q509	8-729-810-13	TRANSISTOR	2SA1677	
Q510	8-729-810-13	TRANSISTOR	2SA1677	
Q801	8-729-920-74	TRANSISTOR	2SC2412K-QR	
Q803	8-729-920-XX	TRANSISTOR	DTA114EU	
Q804	8-729-424-59	TRANSISTOR	UN2212	
Q805	8-729-424-12	TRANSISTOR	UN2112	
Q806	8-729-905-23	TRANSISTOR	2SA1576-R	

< RESISTOR >

Ref. No.	Part No.	Description				Remark
R101	1-216-834-11	METAL CHIP	12K	5%	1/16W	
R102	1-216-834-11	METAL CHIP	12K	5%	1/16W	
R103	1-218-724-11	METAL CHIP	22K	0.50%	1/16W	
R104	1-218-724-11	METAL CHIP	22K	0.50%	1/16W	
R105	1-218-883-11	METAL CHIP	33K	0.50%	1/16W	
R106	1-218-883-11	METAL CHIP	33K	0.50%	1/16W	
R107	1-216-695-11	METAL CHIP	68K	0.5%	1/10W	
R108	1-218-736-11	METAL CHIP	68K	0.50%	1/16W	
R109	1-216-097-00	METAL CHIP	100K	5%	1/10W	
R110	1-216-033-00	METAL CHIP	220	5%	1/10W	
R111	1-216-065-00	METAL CHIP	4.7K	5%	1/10W	
R112	1-216-793-11	METAL GLAZE	4.7	5%	1/16W	
R113	1-216-789-11	METAL CHIP	2.2	5%	1/16W	
R114	1-216-823-11	METAL CHIP	1.5K	5%	1/16W	
R115	1-216-823-11	METAL CHIP	1.5K	5%	1/16W	
R116	1-216-813-11	METAL CHIP	220	5%	1/16W	
R118	1-216-815-11	METAL CHIP	330	5%	1/16W	
R119	1-216-313-00	METAL CHIP	8.2	5%	1/10W	
R120	1-216-825-11	METAL CHIP	2.2K	5%	1/16W	
R201	1-216-834-11	METAL CHIP	12K	5%	1/16W	
R202	1-216-834-11	METAL CHIP	12K	5%	1/16W	
R203	1-218-724-11	METAL CHIP	22K	0.50%	1/16W	
R204	1-218-724-11	METAL CHIP	22K	0.50%	1/16W	
R205	1-218-883-11	METAL CHIP	33K	0.50%	1/16W	
R206	1-216-687-11	METAL CHIP	33K	0.5%	1/10W	
R207	1-218-736-11	METAL CHIP	68K	0.50%	1/16W	
R208	1-218-736-11	METAL CHIP	68K	0.50%	1/16W	
R209	1-216-845-11	METAL CHIP	100K	5%	1/16W	
R210	1-216-033-00	METAL CHIP	220	5%	1/10W	
R211	1-216-065-00	METAL CHIP	4.7K	5%	1/10W	
R212	1-216-308-00	METAL CHIP	4.7	5%	1/10W	
R213	1-216-789-11	METAL CHIP	2.2	5%	1/16W	
R214	1-216-053-00	METAL CHIP	1.5K	5%	1/10W	
R215	1-216-053-00	METAL CHIP	1.5K	5%	1/10W	
R216	1-216-813-11	METAL CHIP	220	5%	1/16W	
R218	1-216-815-11	METAL CHIP	330	5%	1/16W	
R219	1-216-796-11	METAL GLAZE	8.2	5%	1/16W	
R220	1-216-825-11	METAL CHIP	2.2K	5%	1/16W	
R301	1-218-700-11	METAL CHIP	2.2K	0.50%	1/16W	
R302	1-218-700-11	METAL CHIP	2.2K	0.50%	1/16W	
R303	1-216-832-11	METAL CHIP	8.2K	5%	1/16W	
R304	1-216-103-00	METAL CHIP	180K	5%	1/10W	
R305	1-216-821-11	METAL CHIP	1K	5%	1/16W	
R306	1-216-825-11	METAL CHIP	2.2K	5%	1/16W	
R309	1-216-845-11	METAL CHIP	100K	5%	1/16W	
R310	1-218-708-11	METAL CHIP	4.7K	0.50%	1/16W	
R312	1-216-065-00	METAL CHIP	4.7K	5%	1/10W	
R314	1-216-832-11	METAL CHIP	8.2K	5%	1/16W	
R315	1-216-848-11	METAL CHIP	180K	5%	1/16W	
R316	1-216-817-11	METAL CHIP	470	5%	1/16W	
R317	1-216-073-00	METAL CHIP	10K	5%	1/10W	
R318	1-216-049-00	METAL CHIP	1K	5%	1/10W	
R319	1-216-821-11	METAL CHIP	1K	5%	1/16W	
R320	1-216-857-11	METAL CHIP	1M	5%	1/16W	
R321	1-216-823-11	METAL CHIP	1.5K	5%	1/16W	

SEE ADDITIONAL INFORMATION

MAIN

Ref. No.	Part No.	Description			Remark
R322	1-216-053-00	METAL CHIP	1.5K	5%	1/10W
R323	1-216-823-11	METAL CHIP	1.5K	5%	1/16W
R324	1-216-823-11	METAL CHIP	1.5K	5%	1/16W
R401	1-216-184-00	METAL GLAZE	270	5%	1/8W
R402	1-216-061-00	METAL CHIP	3.3K	5%	1/10W
R403	1-216-073-00	METAL CHIP	10K	5%	1/10W
R404	1-216-073-00	METAL CHIP	10K	5%	1/10W
R405	1-216-808-11	METAL CHIP	82	5%	1/16W
R406	1-216-840-11	METAL CHIP	39K	5%	1/16W
R407	1-216-830-11	METAL CHIP	5.6K	5%	1/16W
R408	1-216-184-00	METAL GLAZE	270	5%	1/8W
R409	1-216-821-11	METAL CHIP	1K	5%	1/16W
R410	1-216-837-11	METAL CHIP	22K	5%	1/16W
R411	1-216-789-11	METAL CHIP	2.2	5%	1/16W
R412	1-216-833-11	METAL CHIP	10K	5%	1/16W
R413	1-216-049-00	METAL CHIP	1K	5%	1/10W
R414	1-218-609-11	METAL CHIP	3.9	5%	1W
R415	1-216-041-00	METAL CHIP	470	5%	1/10W
R416	1-216-061-00	METAL CHIP	3.3K	5%	1/10W
R417	1-216-689-11	METAL CHIP	39K	0.5%	1/10W
R418	1-216-033-00	METAL CHIP	220	5%	1/10W
R419	1-216-840-11	METAL CHIP	39K	5%	1/16W
R420	1-216-809-11	METAL CHIP	100	5%	1/16W
R421	1-216-158-00	METAL GLAZE	22	5%	1/8W
R423	1-216-073-00	METAL CHIP	10K	5%	1/10W
R424	1-216-829-11	METAL CHIP	4.7K	5%	1/16W
R426	1-216-819-11	METAL CHIP	680	5%	1/16W
R427	1-216-797-11	METAL CHIP	10	5%	1/16W
R428	1-216-806-11	METAL GLAZE	56	5%	1/16W
R429	1-216-806-11	METAL GLAZE	56	5%	1/16W
R430	1-216-806-11	METAL GLAZE	56	5%	1/16W
R431	1-216-806-11	METAL GLAZE	56	5%	1/16W
R432	1-216-806-11	METAL GLAZE	56	5%	1/16W
R434	1-216-017-00	METAL CHIP	47	5%	1/10W
R435	1-216-158-00	METAL GLAZE	22	5%	1/8W
R436	1-216-073-00	METAL CHIP	10K	5%	1/10W
R437	1-216-839-11	METAL CHIP	33K	5%	1/16W
R438	1-216-061-00	METAL CHIP	3.3K	5%	1/10W
R439	1-216-851-11	METAL CHIP	330K	5%	1/16W
R440	1-216-797-11	METAL CHIP	10	5%	1/16W
R502	1-216-061-00	METAL CHIP	3.3K	5%	1/10W
R503	1-216-825-11	METAL CHIP	2.2K	5%	1/16W
R504	1-216-831-11	METAL CHIP	6.8K	5%	1/16W
R505	1-216-121-00	METAL CHIP	1M	5%	1/10W
R507	1-216-077-00	METAL CHIP	15K	5%	1/10W
R508	1-216-068-00	METAL CHIP	6.2K	5%	1/10W
R509	1-216-073-00	METAL CHIP	10K	5%	1/10W
R510	1-216-001-00	METAL CHIP	10	5%	1/10W
R511	1-216-097-00	METAL CHIP	100K	5%	1/10W
R512	1-216-833-11	METAL CHIP	10K	5%	1/16W
R515	1-216-065-00	METAL CHIP	4.7K	5%	1/10W
R516	1-216-855-11	METAL CHIP	680K	5%	1/16W
R517	1-216-845-11	METAL CHIP	100K	5%	1/16W
R518	1-216-057-00	METAL CHIP	2.2K	5%	1/10W
R519	1-216-843-11	METAL CHIP	68K	5%	1/16W
R520	1-216-849-11	METAL CHIP	220K	5%	1/16W
R521	1-216-837-11	METAL CHIP	22K	5%	1/16W
R522	1-216-845-11	METAL CHIP	100K	5%	1/16W
R523	1-216-829-11	METAL CHIP	4.7K	5%	1/16W
R524	1-216-115-00	METAL CHIP	560K	5%	1/10W
R525	1-216-073-00	METAL CHIP	10K	5%	1/10W
R526	1-216-057-00	METAL CHIP	2.2K	5%	1/10W
R527	1-218-724-11	METAL CHIP	22K	0.50%	1/16W
R528	1-216-847-11	METAL CHIP	150K	5%	1/16W
R529	1-216-062-00	METAL CHIP	3.6K	5%	1/10W
R530	1-216-059-00	METAL CHIP	2.7K	5%	1/10W
R532	1-216-683-11	METAL CHIP	22K	0.5%	1/10W
R534	1-216-821-11	METAL CHIP	1K	5%	1/16W
R535	1-216-863-11	METAL GLAZE	3.3M	5%	1/16W
R536	1-216-842-11	METAL CHIP	56K	5%	1/16W
R537	1-216-073-00	METAL CHIP	10K	5%	1/10W
R538	1-216-821-11	METAL CHIP	1K	5%	1/16W
R539	1-216-857-11	METAL CHIP	1M	5%	1/16W
R541	1-216-047-00	METAL CHIP	820	5%	1/10W
R542	1-216-053-00	METAL CHIP	1.5K	5%	1/10W
R543	1-216-091-00	METAL CHIP	56K	5%	1/10W
R544	1-216-833-11	METAL CHIP	10K	5%	1/16W
R549	1-216-857-11	METAL CHIP	1M	5%	1/16W
R550	1-216-057-00	METAL CHIP	2.2K	5%	1/10W
R551	1-216-057-00	METAL CHIP	2.2K	5%	1/10W
R553	1-216-073-00	METAL CHIP	10K	5%	1/10W
R554	1-216-105-00	METAL CHIP	220K	5%	1/10W
R556	1-216-081-00	METAL CHIP	22K	5%	1/10W
R557	1-216-049-00	METAL CHIP	1K	5%	1/10W
R559	1-216-843-11	METAL CHIP	68K	5%	1/16W
R561	1-216-065-00	METAL CHIP	4.7K	5%	1/10W
R562	1-216-845-11	METAL CHIP	100K	5%	1/16W
R563	1-216-099-00	METAL CHIP	120K	5%	1/10W
R564	1-218-736-11	METAL CHIP	68K	0.50%	1/16W
R565	1-218-736-11	METAL CHIP	68K	0.50%	1/16W
R566	1-218-744-11	METAL CHIP	150K	0.50%	1/16W
R567	1-218-736-11	METAL CHIP	68K	0.50%	1/16W
R568	1-218-736-11	METAL CHIP	68K	0.50%	1/16W
R569	1-218-744-11	METAL CHIP	150K	0.50%	1/16W
R570	1-216-061-00	METAL CHIP	3.3K	5%	1/10W
R572	1-216-845-11	METAL CHIP	100K	5%	1/16W
R590	1-216-073-00	METAL CHIP	10K	5%	1/10W
R591	1-216-057-00	METAL CHIP	2.2K	5%	1/10W

MAIN JACK

Ref. No.	Part No.	Description				Remark
R601	1-216-097-00	METAL CHIP	100K	5%	1/10W	
R602	1-216-827-11	METAL CHIP	3.3K	5%	1/16W	
R603	1-216-827-11	METAL CHIP	3.3K	5%	1/16W	
R604	1-218-293-11	METAL GLAZE	24K	5%	1/16W	
R605	1-216-073-00	METAL CHIP	10K	5%	1/10W	
R606	1-216-833-11	METAL CHIP	10K	5%	1/16W	
R609	1-216-841-11	METAL CHIP	47K	5%	1/16W	
R610	1-216-829-11	METAL CHIP	4.7K	5%	1/16W	
R801	1-216-838-11	METAL CHIP	27K	5%	1/16W	
R802	1-216-837-11	METAL CHIP	22K	5%	1/16W	
R803	1-216-837-11	METAL CHIP	22K	5%	1/16W	
R804	1-216-837-11	METAL CHIP	22K	5%	1/16W	
R805	1-216-857-11	METAL CHIP	1M	5%	1/16W	
R815	1-216-073-00	METAL CHIP	10K	5%	1/10W	
R816	1-216-849-11	METAL CHIP	220K	5%	1/16W	
R817	1-216-833-11	METAL CHIP	10K	5%	1/16W	
R818	1-216-833-11	METAL CHIP	10K	5%	1/16W	
R819	1-216-073-00	METAL CHIP	10K	5%	1/10W	
R820	1-216-073-00	METAL CHIP	10K	5%	1/10W	
R821	1-216-081-00	METAL CHIP	22K	5%	1/10W	
R822	1-216-081-00	METAL CHIP	22K	5%	1/10W	
R823	1-216-081-00	METAL CHIP	22K	5%	1/10W	
R824	1-216-081-00	METAL CHIP	22K	5%	1/10W	
R825	1-216-065-00	METAL CHIP	4.7K	5%	1/10W	
R826	1-216-854-11	METAL CHIP	560K	5%	1/16W	
R827	1-216-089-00	METAL CHIP	47K	5%	1/10W	
R828	1-216-841-11	METAL CHIP	47K	5%	1/16W	
R829	1-216-841-11	METAL CHIP	47K	5%	1/16W	
R830	1-216-849-11	METAL CHIP	220K	5%	1/16W	
R831	1-216-841-11	METAL CHIP	47K	5%	1/16W	
R832	1-216-065-00	METAL CHIP	4.7K	5%	1/10W	
		< VARIABLE RESISTOR >				
RV301	1-230-485-11	RES, VAR, CARBON 10K/10K (VOL)				
RV401	1-241-394-11	RES, ADJ, METAL GLAZE 4.7K (+3.5V)				
RV501	1-241-396-11	RES, ADJ, METAL GLAZE 22K (TRACKING GAIN)				
RV502	1-241-396-11	RES, ADJ, METAL GLAZE 22K (TRACKING BALANCE)				
RV503	1-241-397-11	RES, ADJ, METAL GLAZE 47K (FOCUS BIAS)				
RV504	1-241-392-11	RES, ADJ, METAL GLAZE 1K (VCO)				
RV505	1-241-396-11	RES, ADJ, METAL GLAZE 22K (FOCUS GAIN)				
		< SWITCH >				
S401	1-572-126-21	SWITCH, PUSH (1 KEY) (BATT DET SW)				
S801	1-692-212-11	SWITCH, KEY BOARD (▶II)				
S802	1-692-212-11	SWITCH, KEY BOARD (STOP/CHARGE)				
S803	1-692-212-11	SWITCH, KEY BOARD (⏮)				
S804	1-692-212-11	SWITCH, KEY BOARD (⏭)				
S805	1-692-212-11	SWITCH, KEY BOARD (PLAY MODE)				
S806	1-692-212-11	SWITCH, KEY BOARD (REPEAT/ENTER)				
S807	1-572-598-21	SWITCH, SLIDE (HOLD)				
S808	1-572-598-21	SWITCH, SLIDE (RESUME)				
S809	1-570-953-11	SWITCH, PUSH (1 KEY) (OPEN SW)				
S810	1-692-212-11	SWITCH, KEY BOARD (DSP MODE)				
S811	1-692-212-11	SWITCH, KEY BOARD (DSP EFFECT)				
S812	1-572-598-21	SWITCH, SLIDE (BATT LILGHT ON)				
		< THERMISTOR >				
TH501	1-809-468-11	THERMISTOR, CHIP				
		< VIBRATOR >				
X301	1-579-636-11	VIBRATOR, CRYSTAL (16.9344MHz)				
X801	1-578-769-11	VIBLATOR, CERAMIC (3.58MHz)				

****

*	1-644-389-11	JACK BOARD				
		**********				
		< CAPACITOR >				
C414	1-135-216-11	TANTALUM CHIP 10uF		20%	10V	
C415	1-162-970-11	CERAMIC CHIP 0.01uF		10%	25V	
		< JACK >				
CNJ401	1-580-681-21	JACK, DC (POLARITY UNIFIED TYPE) (DC IN)				
		< DIODE >				
D430	8-719-988-62	DIODE	1SS355			
D431	8-719-977-03	DIODE	DTZ5.6B			
D432	8-719-104-34	DIODE	1S2836			
		< JUMPER RESISTOR >				
JR401	1-216-295-00	METAL CHIP	0	5%	1/10W	
		< COIL >				
L409	1-412-027-11	INDUCTOR CHIP 2.2uH (US, Canadian, AEP, E, Tourist)				
L410	1-412-027-11	INDUCTOR CHIP 2.2uH				
		< IC RINK >				
PS401	1-576-123-21	RINK, IC (UK)				
		< TRANSISTOR >				
Q423	8-729-924-39	TRANSISTOR	DTC143XU			
Q424	8-729-924-39	TRANSISTOR	DTC143XU			
Q425	8-729-822-60	TRANSISTOR	2SB1302-S			

JACK | REMOTE CONTROL

Ref. No.	Part No.	Description	Remark
		< RESISTOR >	
R451	1-216-049-00	METAL CHIP 1K 5% 1/10W	
R452	1-216-063-00	METAL CHIP 3.9K 5% 1/10W	
R453	1-216-049-00	METAL CHIP 1K 5% 1/10W	
R454	1-216-186-00	METAL GLAZE 330 5% 1/8W	

****

	A-3275-453-A	REMOTE CONTROL BOARD, COMPLETE (UK)
	A-3275-455-A	REMOTE CONTROL BOARD, COMPLETE (US, Canadian, AEP, E)
		< CAPACITOR >
C901	1-164-346-11	CERAMIC CHIP 1uF 16V (US, Canadian, AEP, UK, E)
		< CONNECTOR >
* CN901	1-695-123-11	PIN, CONNECTOR (PC BOARD) 6P (US, Canadian, AEP, UK, E)
		< RESISTOR >
R901	1-218-345-11	METAL CHIP 9.1K 0.50% 1/16W (US, Canadian, AEP, UK, E)
R902	1-218-695-11	METAL CHIP 1.3K 0.50% 1/16W (US, Canadian, AEP, UK, E)
R903	1-218-670-11	METAL CHIP 120 0.50% 1/16W (US, Canadian, AEP, UK, E)
R904	1-218-695-11	METAL CHIP 1.3K 0.50% 1/16W (US, Canadian, AEP, UK, E)
R905	1-216-802-11	METAL CHIP 27 0.50% 1/16W (US, Canadian, AEP, UK, E)
R906	1-216-823-11	METAL CHIP 1.5K 5% 1/16W (US, Canadian, AEP, UK, E)
R907	1-216-806-11	METAL CHIP 56 0.50% 1/16W (US, Canadian, AEP, UK, E)
R908	1-218-698-11	METAL CHIP 1.8K 0.50% 1/16W (US, Canadian, AEP, UK, E)
R909	1-218-672-11	METAL CHIP 150 0.50% 1/16W (US, Canadian, AEP, UK, E)
R910	1-216-821-11	METAL CHIP 1K 5% 1/16W (US, Canadian, AEP, UK, E)
		< VARIABLE RESISTOR >
RV901	1-241-926-11	RES, VAR, CARBON 500/500 (VOL) (US, Canadian, AEP, UK, E)

Ref. No.	Part No.	Description	Remark
		< SWITCH >	
S901	1-572-921-11	SWITCH, KEY BOARD (■) (US, Canadian, AEP, UK, E)	
S902	1-572-921-11	SWITCH, KEY BOARD (DSP) (US, Canadian, AEP, UK, E)	
S903	1-572-921-11	SWITCH, KEY BOARD (▶II) (US, Canadian, AEP, UK, E)	
S904	1-692-088-21	SWITCH, TACTILE (▶▶I) (US, Canadian, AEP, UK, E)	
S905	1-692-088-21	SWITCH, TACTILE (I◀◀) (US, Canadian, AEP, UK, E)	
S906	1-571-275-31	SWITCH, SLIDE (HOLD) (US, Canadian, AEP, UK, E)	

****

MISCELLANEOUS
****

⚠52	8-848-212-11	DEVICE, OPTICAL KSS-330A
56	1-948-418-21	HARNESS
110	1-696-047-11	CORD (WITH PLUG) (CONNECTOR) (US, Canadian, AEP, UK, E)
M901	X-2625-219-1	MOTOR ASSY (K), T.T.
M902	X-2625-171-2	MOTOR ASSY, SLED
S910	1-570-771-11	SWITCH (LIMIT SW)

****

The components identified by mark ⚠ or dotted line with mark ⚠ are critical for safety. Replace only with part number specified.	Les composants identifiés par une marque ⚠ sont critiques pour la sécurité. Ne les remplacer que par une pièce portant le numéro spécifié.

SEE ADDITIONAL INFORMATION

Ref. No.	Part No.	Description	Remark
		ACCESSORIES & PACKING MATERIALS	
		**********	
⚠	1-465-269-11	ADAPTOR, AC (AC-64N(UK) (UK)	
⚠	1-465-520-41	ADAPTOR, AC (AC-64NA) (E, Tourist)	
⚠	1-465-608-11	ADAPTOR, AC (AC-64NA) (US)	
⚠	1-465-833-11	ADAPTOR, AC (AC-64NEM) (AEP)	
⚠	1-693-031-11	ADAPTOR, AC (AC-64NC) (Canadian)	
⚠	1-569-007-11	ADAPTER, CONVERSION 2P (E, Tourist)	
	1-465-940-11	REMOTE CONTROL UNIT (Tourist)	
	1-528-350-11	BATTERY PACK (BP-DM1) (US, Canadian, UK, E, Tourist)	
	1-528-350-21	BATTERY PACK (BP-DM1) (AEP)	
	1-575-195-11	CORD, CONNECTION	
*	3-703-034-21	LABEL, CAUTION (Tourist)	
	3-755-302-11	MANUAL, INSTRUCTION (ENGLISH/FRENCH/ SPANISH) (Canadian, AEP, E, Tourist)	
	3-755-302-21	MANUAL, INSTRUCTION (ENGLISH) (US, UK)	
	3-755-302-41	MANUAL, INSTRUCTION (DUTCH/SWEDISH/ PORTUGUESE) (AEP)	
	3-755-302-51	MANUAL, INSTRUCTION (GERMAN/ITALIAN) (AEP)	
	3-755-302-61	MANUAL, INSTRUCTION (JAPANESE/KOREAN/ CHINESE) (Tourist)	
*	4-943-960-01	CUSHION (UPPER)	
*	4-952-920-01	CUSHION (LOWER) (US)	
*	4-952-921-01	CUSHION (LOWER) (Canadian, E, Tourist)	
*	4-952-922-01	CUSHION (LOWER) (AEP, UK)	
*	4-952-924-01	INDIVIDUAL CARTON (US)	
*	4-952-925-01	INDIVIDUAL CARTON (Canadian, E)	
*	4-952-926-01	INDIVIDUAL CARTON (AEP, UK)	
*	4-953-406-01	INDIVIDUAL CARTON (Tourist)	
	8-953-412-92	HEADPHONE MDR-E552MP/2 SET (E)	
	8-953-468-90	HEADPHONE MDR-E551MP//K SET (Canadian, AEP, UK, Tourist)	
	8-953-522-90	HEADPHONE MDR-14MP SET (US)	
	A-3253-583-A	HEADPHONE UNIT (MDR-E552PC SET), REMOTE CONTROL UNIT (RM-DM6) (UK)	
	A-3263-028-A	HEADPHONE UNIT (MDR-E552PC SET), REMOTE CONTROL UNIT (RM-DM6) (Canadian, AEP)	
	A-3263-099-A	HEADPHONE UNIT (MDR-E552MP/2 SET), REMOTE CONTROL UNIT (RM-DM6) (E)	
	A-3253-588-A	REMOTE CONTROL UNIT (RM-DM6) (US)	
	X-4941-730-1	ADAPTOR ASSY, CAR MOUNT	

****

Ref. No.	Part No.	Description	Remark
		**********	
		HARDWARE LIST	
		**********	
#1	7-627-552-48	SCREW, PRECISION +P 1.7X4	
#2	7-671-155-01	STEEL BALL 3.0	
#3	7-627-852-17	SCREW, +P 1.7X4	
#4	7-685-104-19	SCREW (2X6), TAPPING (B)	
#5	7-685-105-19	SCREW (2X8), TAPPING (B)	

The components identified by mark ⚠ or dotted line with mark ⚠ are critical for safety. Replace only with part number specified.	Les composants identifiés par une marque ⚠ sont critiques pour la sécurité. Ne les remplacer que par une pièce portant le numéro spécifié.

9-957-321-11

Sony Corporation
General Audio Group

English
92G0297-1
Printed in Japan
©1992.7
Published by Customer Relations and Service Group

D-211

SONY

SERVICE MANUAL

US Model
Canadian Model
AEP Model
UK Model
E Model
Tourist Model

SUPPLEMENT-1

File this Supplement with the Service Manual.

Changes :
1. Change of accessory battery pack.
2. Addition of upper lid assembly and flexible retainer.
3. Change of main circuit board (1-644-388-11→1-644-388-12)

● Revise your service manual as shown below due to parts supply classification has been changed.

☛ : **indicates revised portion.**

Page	CURRENT	REVISED
29	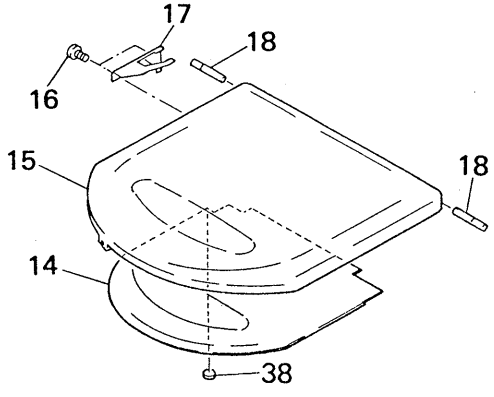	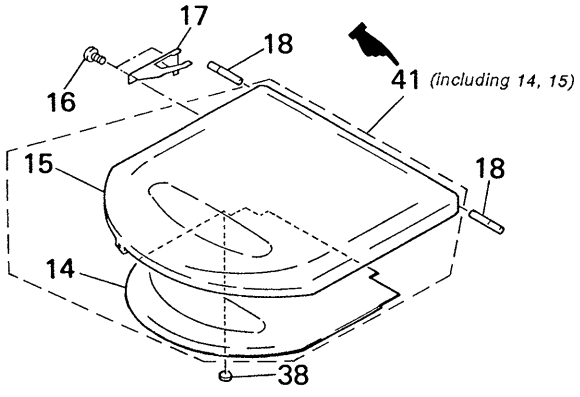 Ref. No. / Part No. / Description 41 / X-4943-590-1 / LID, ASSY UPPER

Sony Corporation
Consumer A&V Products Company
Personal A&V Division

9-957-321-81

English
94D02107-1
Printed in Japan

©1994.4

Published by Home A&V Div. Quality Engineering Dept.

: indicates added parts

FORMER	NEW
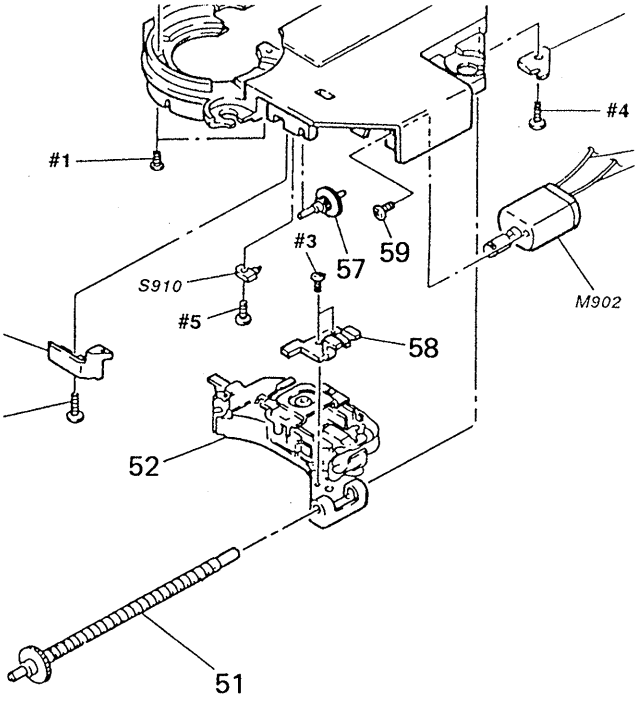	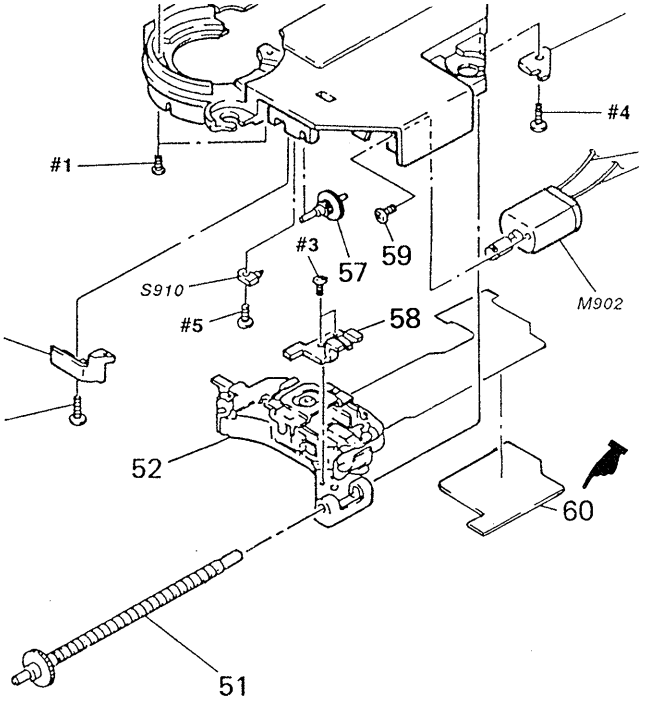

Ref. No.	Part No.	Description
* 60	4-956-818-01	RETAINER, FLEXIBLE

CHANGE OF CN501

FORMER	NEW
【MAIN BOARD】 (SIDE B)	**【MAIN BOARD】** (SIDE B)
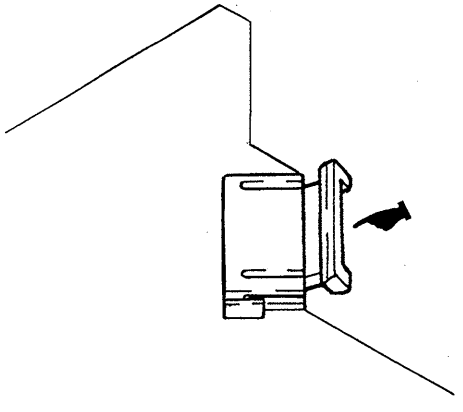	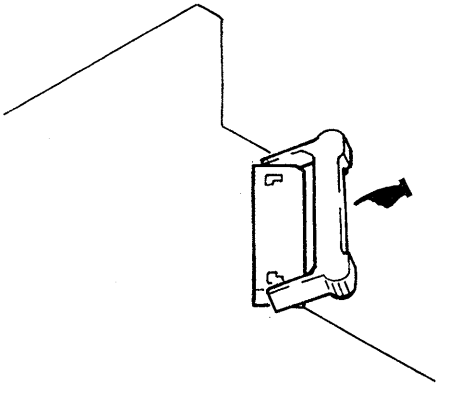

Ref. No.	Part No.	Description
* CN501	1-695-154-11	SOCKET, CONNECTOR 18P

Ref. No.	Part No.	Description
CN501	1-566-534-11	CONNECTOR, FPC (ZIF)18P

CHANGED PARTS

Page	FORMER	NEW
32	A-3275-454-A MAIN BOARD, COMPLETE (US, Canadian, AEP, E, Tourist)	A-3275-454-A MAIN BOARD, COMPLETE (US, Canadian, AEP) A-3276-089-A MAIN BOARD, COMPLETE (E, Tourist)
33	< CONNECTOR > * CN501 1-695-154-11 SOCKET, CONNECTOR 18P	< CONNECTOR > CN501 1-566-534-11 CONNECTOR, FPC (Z1F) 18P
34	< FERRITE BEAD > FB101 1-414-135-11 INDUCTOR CHIP 0uH FB201 1-414-135-11 INDUCTOR CHIP 0uH FB301 1-414-135-11 INDUCTOR CHIP 0uH	< FERRITE BEAD > FB101 1-414-135-11 INDUCTOR CHIP 0uH (EXCEPT E, Tourist) FB201 1-414-135-11 INDUCTOR CHIP 0uH (EXCEPT E, Tourist) FB301 1-414-135-11 INDUCTOR CHIP 0uH (EXCEPT E, Tourist)
	< IC > IC301 8-759-075-45 IC SM5870CS IC801 8-759-081-28 IC uPD75328GC-587-3B9	< IC > IC301 8-759-070-34 IC CXD8426M IC801 8-759-096-58 IC uPD75328GC-606-3B9
		< JUMPER RESISTOR > JR101 1-216-295-00 METAL CHIP 0 5% 1/10W (E, Tourist) JR201 1-216-295-00 METAL CHIP 0 5% 1/10W (E, Tourist) JR301 1-216-295-00 METAL CHIP 0 5% 1/10W (E, Tourist) JR307 1-216-864-11 METAL CHIP 0 5% 1/16W (E, Tourist)
	< COIL > L307 1-410-997-31 INDUCTOR CHIP 2.2uH	< COIL > L307 1-410-997-31 INDUCTOR CHIP 2.2uH (EXCEPT E, Tourist)
35	< RESISTOR > R101 1-216-834-11 METAL CHIP 12K 5% 1/16W R102 1-216-834-11 METAL CHIP 12K 5% 1/16W R201 1-216-834-11 METAL CHIP 12K 5% 1/16W R202 1-216-834-11 METAL CHIP 12K 5% 1/16W	< RESISTOR > R101 1-218-873-11 METAL CHIP 12K 0.50% 1/16W R102 1-218-873-11 METAL CHIP 12K 0.50% 1/16W R201 1-218-873-11 METAL CHIP 12K 0.50% 1/16W R202 1-218-873-11 METAL CHIP 12K 0.50% 1/16W
36	< RESISTOR > R554 1-216-105-00 METAL CHIP 220K 5% 1/10W R564 1-218-736-11 METAL CHIP 68K 0.50% 1/16W R565 1-218-736-11 METAL CHIP 68K 0.50% 1/16W R566 1-218-744-11 METAL CHIP 150K 0.50% 1/16W R567 1-218-736-11 METAL CHIP 68K 0.50% 1/16W R568 1-218-736-11 METAL CHIP 68K 0.50% 1/16W R569 1-218-744-11 METAL CHIP 150K 0.50% 1/16W	< RESISTOR > R554 1-216-099-00 METAL CHIP 120K 5% 1/10W R564 1-218-734-11 METAL CHIP 56K 0.50% 1/16W R565 1-218-734-11 METAL CHIP 56K 0.50% 1/16W R566 1-218-897-11 METAL CHIP 120K 0.50% 1/10W R567 1-218-734-11 METAL CHIP 56K 0.50% 1/16W R568 1-218-734-11 METAL CHIP 56K 0.50% 1/16W R569 1-218-897-11 METAL CHIP 120K 0.50% 1/16W R592 1-216-085-00 METAL CHIP 33K 5% 1/10W R593 1-218-286-11 METAL CHIP 91 5% 1/16W
39	< ACCESSORIES & PACKING MATERIALS > 1-528-350-11 BATTERY PACK (BP-DM1) (US, Canadian, UK, E, Tourist)	< ACCESSORIES & PACKING MATERIALS > 1-528-444-31 BATTERY PACK (BP-DM10) (US, Canadian, UK, E, Tourist)

DIAGRAMS

• SEMICONDUCTOR LEAD LAYOUTS

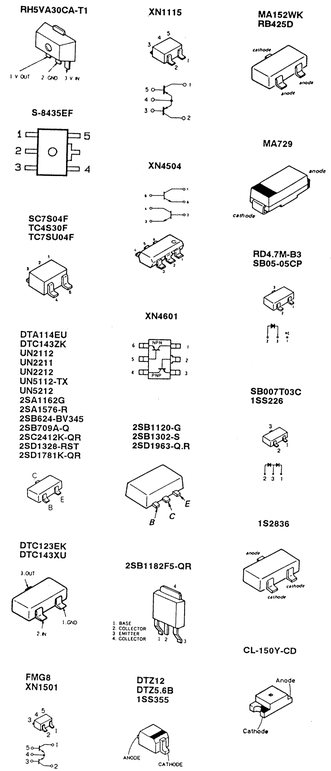

• SEMICONDUCTOR LOCATION

Ref. No.	Location	Ref. No.	Location
D301	G-2	IC602	H-17
D302	H-3	IC604	H-7
D303	G-3	IC801	H-18
D304	H-3	IC804	J-8
D305	J-8		
D401	F-4	Q101	H-21
D402	E-3	Q201	H-21
D403	G-5	Q301	I-4
D404	F-3	Q302	I-21
D405	E-21	Q303	H-21
D406	G-4	Q304	I-6
D407	G-4	Q305	H-21
D408	F-22	Q306	H-3
D409	G-4	Q308	I-21
D410	F-3	Q401	F-21
D411	G-21	Q402	G-21
D412	J-19	Q403	F-20
D413	J-19	Q404	F-4
D414	J-18	Q405	F-22
D415	J-17	Q406	F-22
D416	J-17	Q407	E-4
D419	H-20	Q408	E-4
D420	J-6	Q409	H-5
D421	G-21	Q410	G-4
D422	J-6	Q411	E-5
D423	F-5	Q412	G-21
D430	B-12	Q413	J-6
D431	A-12	Q414	G-4
D432	B-12	Q415	G-4
D501	F-20	Q416	F-4
D502	G-20	Q417	J-6
D503	G-20	Q418	J-7
D504	F-6	Q423	B-12
D505	F-6	Q424	B-12
D506	F-19	Q425	B-13
D507	H-7	Q501	E-11
D801	H-18	Q502	I-15
D803	J-8	Q503	G-10
D805	J-8	Q504	G-10
D806	J-6	Q505	I-15
D807	F-3	Q506	G-11
		Q507	F-11
		Q508	H-18
IC301	H-6	Q509	I-15
IC302	J-4	Q510	I-16
IC303	I-4		
IC304	I-19	Q801	G-19
IC401	F-21	Q803	J-20
		Q804	J-6
IC501	G-14	Q805	J-8
IC502	H-16	Q806	G-19
IC504	G-18		
IC505	G-20		
IC601	I-9		

Note:

- ○— : parts extracted from the component side.
- ○ : Through hole.
- ▒ : Pattern on the side which is seen.

PRINTED WIRING BOARDS (Service Manual See page 15 – 18.)

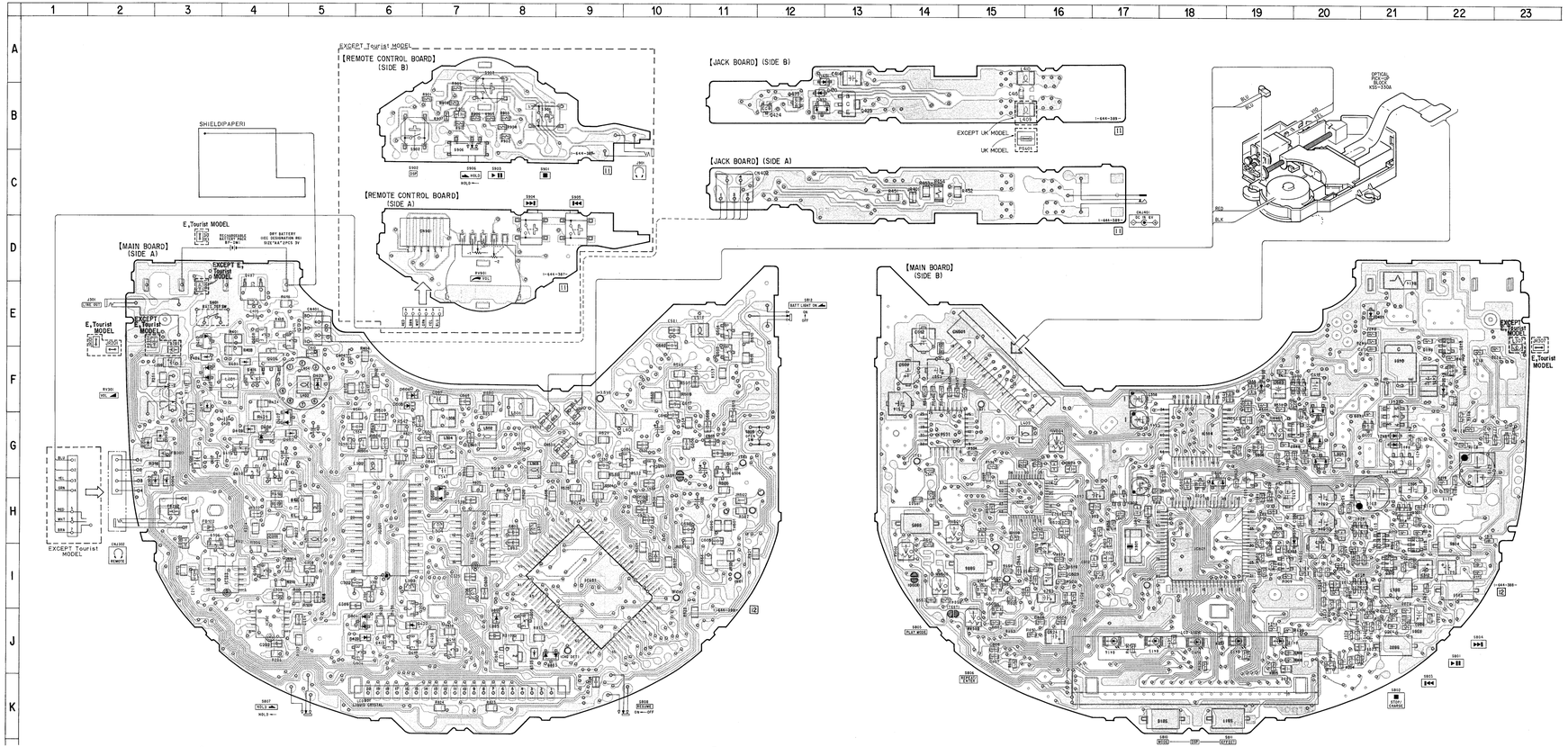

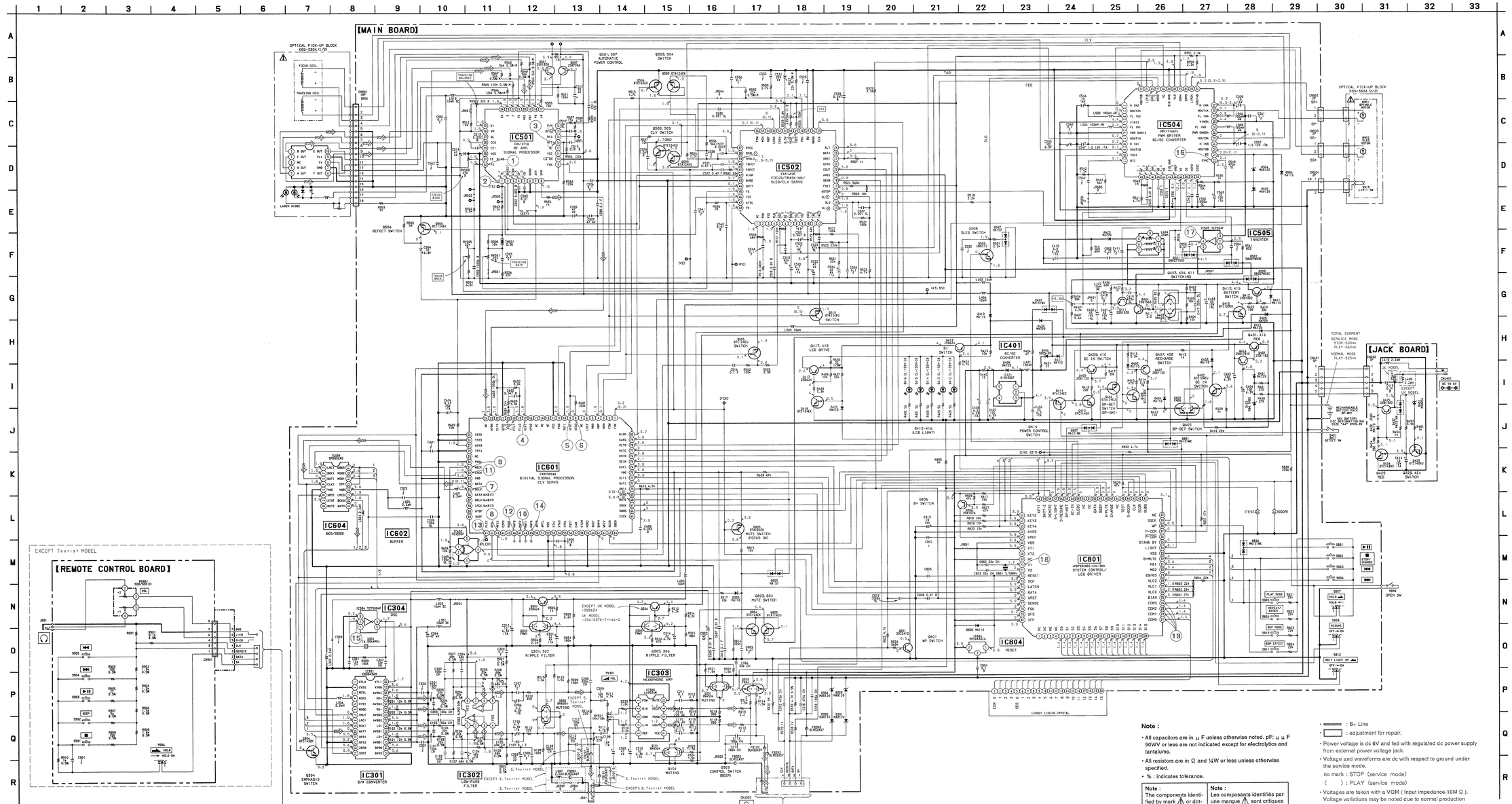

Note :

- All capacitors are in μ F unless otherwise noted. pF: μ μ F 50WV or less are not indicated except for electrolytics and tantalums.
- All resistors are in Ω and ¼W or less unless otherwise specified.
- % : indicates tolerance.

Note :	Note :
The components identified by mark ⚠ or dotted line with mark ⚠ are critical for safety. Replace only with part number specified.	Les composants identifiés par une marque ⚠ sont critiques pour la sécurité. Ne les remplacer que par une pièce portant le numéro spécifié.

- ▬ : B+ Line
- ▭ : adjustment for repair.
- Power voltage is dc 6V and fed with regulated dc power supply from external power voltage jack.
- Voltage and waveforms are dc with respect to ground under the service mode.
  no mark : STOP (service mode)
  〈 〉: PLAY (service mode)
- Voltages are taken with a VOM (Input impedance 10M Ω). Voltage variations may be noted due to normal production tolerances.
- Waveforms are taken with a oscilloscope. Voltage variations may be noted due to normal production tolerances.
- Circled numbers refer to waveforms.
- Signal path.
  ⇨ : CD