D-220

SERVICE MANUAL

US Model
AEP Model
E Model

Model Name Using Similar Mechanism	NEW
CD Mechanism	KSM-331CAN (S)

SPECIFICATIONS

System: Compact disc digital audio system

Laser diode properties: Material: GaAlAs
Wavelength: λ =780 nm
Emission duration: Continuous
Laser output: Less than 44.6 µW
(This output is the value measured at a distance of 200 mm from the objective lens surface on the Optical Pick-up Block.)

Error correction: Sony Super Strategy Cross Interleave Reed Solomon Code

D-A conversion: 1-bit quartz time-axis control

Frequency response: 20 – 20,000 Hz $^{+1}_{-2}$ dB
(measured by EIAJ CP-307)

Output (at 4.5 V input level): Line output (stereo minijack)
Output level 0.8 V rms at 50 kilohms
Load impedance over 10 kilohms
Headphones (stereo minijack)
4 mW + 4 mW at 16 Ω

General

Power requirements: Supplied:
- DC 2.4 V Rechargeable battery pack
- DC IN 4.5 V jack accepts the Sony AC power adaptor for use on :
  220 – 230 V AC, 50 Hz (AEP model)
  120 V AC, 60 Hz (US, Central and South America model)
  100 – 240 V AC, 50/60 Hz (E model)

Not supplied:
- DC IN 4.5 V accepts the Sony CPM-300P mount plate and CPM-300PK mount arm for use on car battery.
- DC 3 V two size AA (LR6) alkaline batteries

Dimensions: Approx. 132 × 26.8 × 151 mm (5 1/4 × 1 1/16 × 6 in.) (w/h/d) incl. projecting parts and controls

Mass: Approx. 300 g (11 oz.) incl. rechargeable battery pack

Supplied accessories: AC power adaptor (1)
Rechargeable battery pack (1)
Connecting cord (phono plug × 2 ↔ stereo miniplug) (1)
Stereo headphones (1)

Design and specifications subject to change without notice.

COMPACT DISC COMPACT PLAYER

SONY®

TABLE OF CONTENTS

Section	Title	Page
1.	GENERAL	3
2.	SERVICE MODE	4
3.	ELECTRICAL ADJUSTMENTS	8
4.	DIAGRAMS	
4-1.	IC Pin Function Description	12
4-2.	Block Diagram	15
4-3.	Schematic Diagram	20
4-4.	Printed Wiring Boards	23
4-5.	IC Block Diagrams	26
5.	EXPLODED VIEWS	
5-1.	Cabinet Section	30
5-2.	Optical Pick-up Mechanism Section	31
6.	ELECTRICAL PARTS LIST	32

SAFETY-RELATED COMPONENT WARNING!!

COMPONENTS IDENTIFIED BY MARK ⚠ OR DOTTED LINE WITH MARK ⚠ ON THE SCHEMATIC DIAGRAMS AND IN THE PARTS LIST ARE CRITICAL TO SAFE OPERATION. REPLACE THESE COMPONENTS WITH SONY PARTS WHOSE PART NUMBERS APPEAR AS SHOWN IN THIS MANUAL OR IN SUPPLEMENTS PUBLISHED BY SONY.

SERVICING NOTES

NOTES ON HANDLING THE OPTICAL PICK-UP BLOCK OR BASE UNIT

The laser diode in the optical pick-up block may suffer electrostatic breakdown because of the potential difference generated by the charged electrostatic load, etc. on clothing and the human body.

During repair, pay attention to electrostatic breakdown and also use the procedure in the printed matter which is included in the repair parts.

The flexible board is easily damaged and should be handled with care.

Flexible Circuit Board Repairing

- Keep the temperature of the soldering iron around 270 ℃ during repairing.
- Do not touch the soldering iron on the same conductor of the circuit board (within 3 times).
- Be careful not to apply force on the conductor when soldering or unsoldering.

Notes on chip componet replacement

- Never reuse a disconnected chip component.
- Notice that the minus side of a tantalum capacitor may be damaged by heat.

Before Replacing the Optical Block

Please be sure to check thoroughly the parameters as par the "Optical Block Checking Procedures" (Part No. : 9-960-027-11) issued separately before replacing the optical block. Note and specifications required to check are given below.

- FOK output : IC601 ㉓ pin
- S carve P-to-P value : 1.5Vp-p
  When checking S curve P-to-P value.
  Remove the lead wire to disc motor and R641.
- RF signal P-to-P value : 0.7Vp-p
- Traverse signal P-to-P value : 0.5Vp-p
- The grating holder can not repair.

SECTION 1
GENERAL

This section is extracted from instruction manual.

Location and Function of Controls

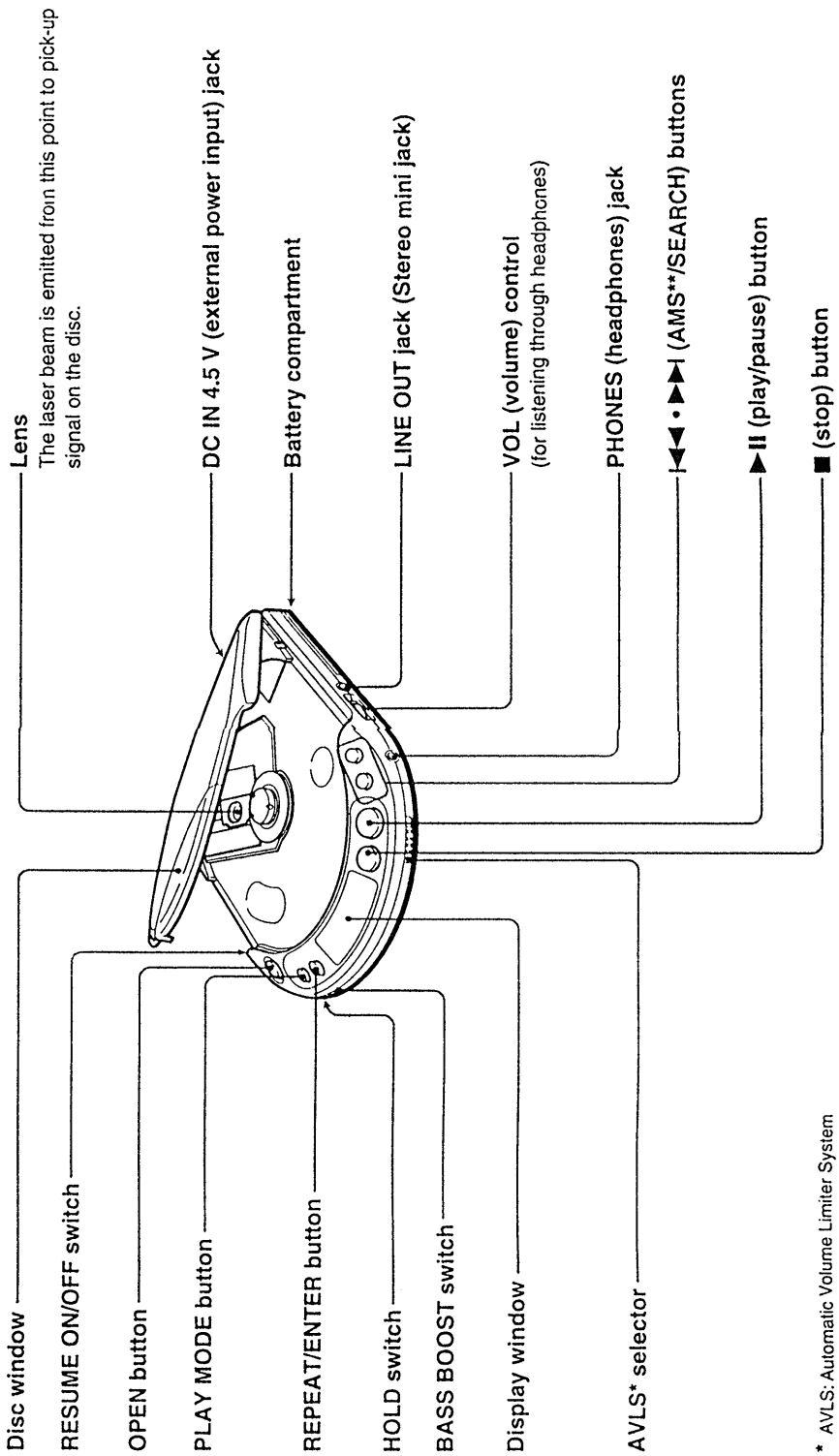

SECTION 2
SERVICE MODE

NOTES ON LASER DIODE EMISSION CHECK

The laser beam on this model is concentrated so as to be focused on the disc reflective surface by the objective lens in the optical pick-up block.

Therefore, when checking the laser diode emission, observe more than 30 cm away from the objective lens.

Laser Diode Check Procedure

The laser diode on this set will not emit unless the upper panel is closed and S810 (push switch type) is turned on.

The laser diode will always emit even if focus search is not performed in service mode.

The laser diode is checked using, the current value which flows to the laser diode inside the optical pick-up block.

Procedure 1 (service mode or normal operation)

Check the laser diode emission with the eye.

1. Open upper panel by pushing the OPEN button.
2. S810 on as Fig. 1.
   (In service mode, this operation is not necessary.)
3. Press the ▶II key.
   (In service mode, this operation is not necessary.)
4. Observe the objective lens and confirm that the laser diode goes on about 2.5 seconds due to focus search. If it does not, APC circuit or optical pick-up block is defective.

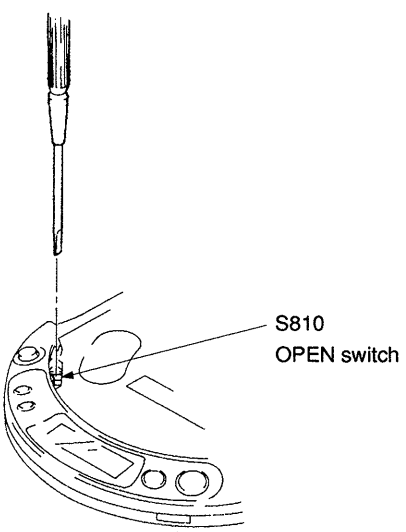

Fig. 1 Turning S810 on

Procedure 2 (service mode or normal operation)

Check by the current with flows in the laser diode.

1. Remove the cabinet.
2. Pick up the optical block by hand and look the rear side of it to see the follwing the label and rear the current value on the label.

   (Label on optical pick-up block)

   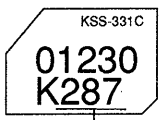

   current value. This means 28.7mA.
   (The current value varies with the set.)
3. Connect a VOM as shown in fig.2.
   (both side of R501 : 1Ω)
4. Press the ▶II key.
5. Calculate the current by the VOM reading.
   VOM reading (V) = current (A)
   ex. VOM reading = 0.027V
   0.027 = 0.027(A) = 27 (mA)
6. Confirm that the ammeter reading is within the range given below.
   value on label $^{+5}_{-11}$mA (25℃)
   variation relative to temperature : 0.4mA/℃
   (Current increases when temperature rises and decreases when it drops.)

If the value is more than the range given, APC circuit has been defective or the laser diode has deteriorated.

If it is less, APC circuit of optical pick-up block is defective.

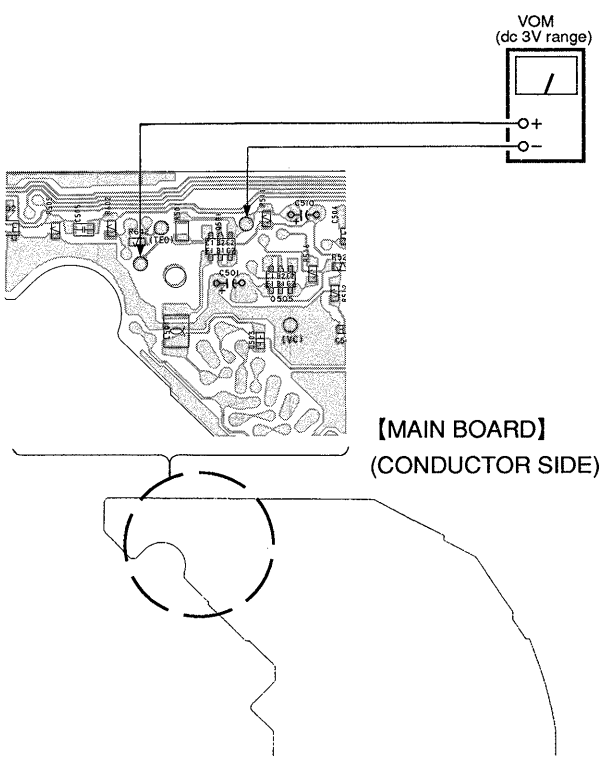

Fig. 2 VOM connecting

SERVICE MODE (service program)

This set has built-in service program in the microcomputer as usual sets.

The operation method of service program is explained below.

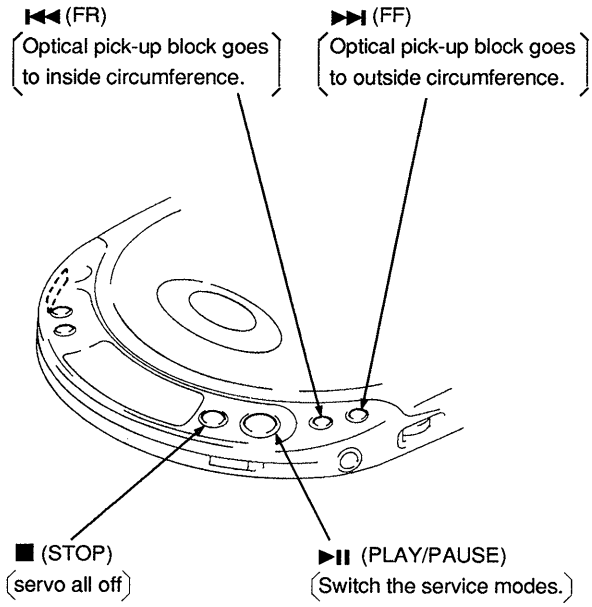

〔 〕: Main operation in service mode, for details, refer to step 2.

Fig. 3 Key Positions

· Step 1 (Service Mode setting method)

1. Solder jumper the TEST terminal (IC801 pin ⑱ (XTEST) is grounded.).
2. Plug in the external power supply.
   After performing the above procedure, the set is switched to service mode.

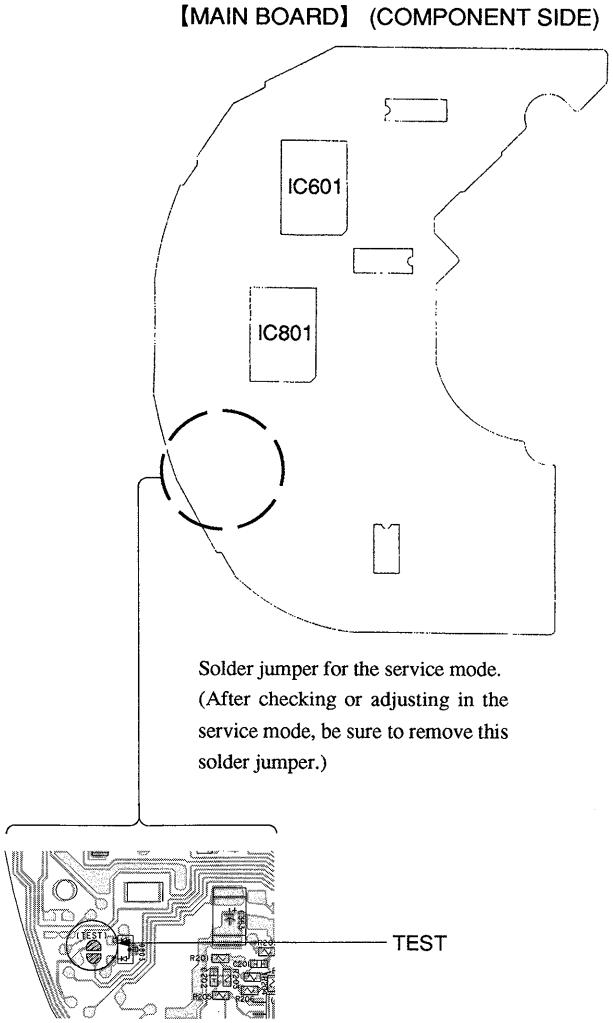

Fig. 4 TEST terminal

· **Step 2 (Service Mode operation)**

1. LCD Display Check mode
   This mode is selected immediately after selecting the service modes. In this mode, LCD display varies into six different patterns and these six patterns are repeated.
2. Each time the ▶II key is pressed, the modes are switched as follows.

⓪ LCD Display Check mode

Press the ▶II key.

① Automatic Voltage Adjustment mode

PWM output data (IC801 pin ④ output, PWM signal duty ratio) to control output voltage of DC/DC converter for servo system power supply is displayed on the LCD.

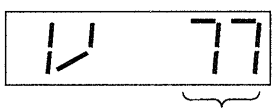

The DC/DC converter will be faulty if the display data is "00" or "FF".

Optical pick-up can be moved on and after this mode.
Movement of optical pick-up··· The optical pick-up moves to outside track when the ▶▶I key is passed.
The optical pick-up moves to inside track when the I◀◀ key is passed.

Check Location : C507 ⊕ terminal

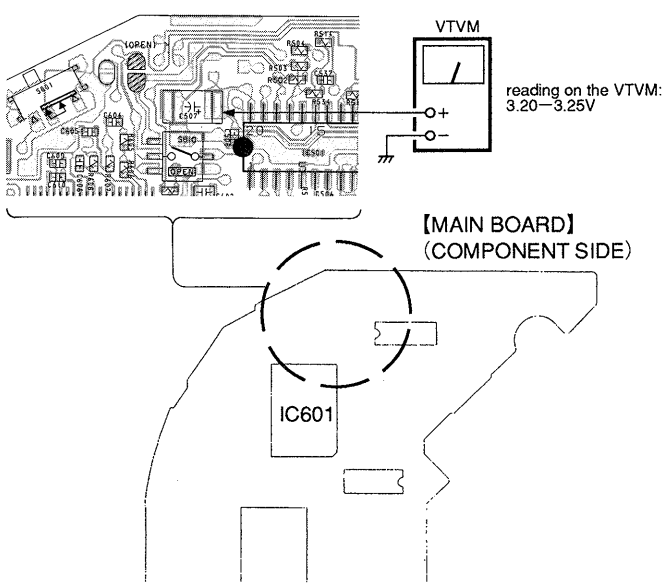

Press the ▶II key.

② Automatic Average Adjustment mode

DC offset value of RF voltage (IC601 pin ㉖ input) against VC voltage (IC601 pin ㉚ input), and FE voltage (IC601 pin ㉙ input) against VC voltage (IC501 pin ⑨) is displayed on the LCD.

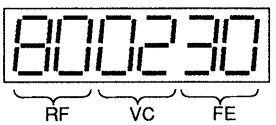

Faulty if the display is "00 00 00" or "FF FF FF".
Also, faulty if lower 2 digits (FE voltage) are "20" or less.
＊The laser is turned off in this mode.

Press the ▶II key.

③ Automatic Tracking Balance Adjustment mode

The focus is turned on from the focus search, then the disc motor runs and Automatic Tracking Balance Adjustment mode is activated, if a disc is loaded on the turn table.
A 4-bit tracking balance data is displayed on the LCD.
At this time, optical pick-up can be moved with the ▶▶I or I◀◀ key.

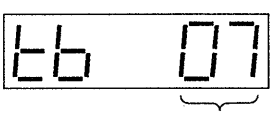

Faulty if the display data is "00" or "FF".

Focus search is repeated many times, if a disc is not loaded on the turn table. In this case, load a disc on the turn table and perform confirmation.

Press the ▶II key.

④ Automatic Focus Gain Adjustment mode

The focus gain is displayed on the LCD.

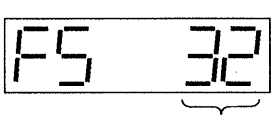

Focus Gain

Press the ▶II key.

⑤ Automatic Tracking Adjustment mode

The tracking gain is displayed on the LCD.

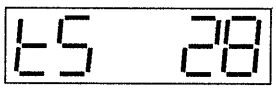

tracking gain

If tracking servo is faulty, "--" is displayed as shown below.

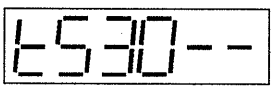

Press the ▶II key.

⑥ Audio signal is output.

"All" is displayed on the LCD.

3. When the ■ key is pressed, all servo systems (focus, tracking and sled) are turned off and the LCD Display Check mode is restored. However, the disc motor will run for a while due to inertia.

· Step 3 (Service Mode release)

1. First be sure to unplug the external power supply, then remove the TEST terminal solder jumper.
2. The set will now operated normally.

SECTION 3
ELECTRICAL ADJUSTMENTS

Notes on Check / Adjustment

1. Confirmation/adjustment should be performed after selecting a service mode. The service mode must be cancelled after confirmation/adjustment is finished.
   (Refer to "Service Mode (service program)" on page 5.)
2. Confirmation/adjustment should be performed in the order listed.
3. Use YEDS-18 disc (part No. : 3-702-101-01) unless otherwise indicated.
4. Power supply voltage : DC4.5V
   HOLD switch : OFF
   VOL knob : Minimum
   BASS BOOST switch : NORM
   RESUME switch : OFF

PREPARATION

Put the set into STOP condition in service mode (See page 5) and perform the following checks. Repair if there are any abnormalities.

· Sled Motor Check

1. Press the ▶II key once, then the ▶▶I and I◀◀ keys to confirm that the optical pick-up moves to inside track → outside track → inside track smoothly free from sticking or noise.
   ▶▶I : optical pick-up block moves outward
   I◀◀ : optical pick-up block moves inward

· Focus Search Check

1. Press the ▶II key 3 times.
   (Focus search is performed continuously.)
2. Observe the optical pick-up block objective lens and check that it moves smoothly up and down with no catching or noises. (It is normal even if it stops for a moment during UP motion.)
3. Press the ■ key.
   Check that focus search operation stops. If it does not, press the ■ key again a little longer time.

VC Connecting Point

FOCUS BIAS CHECK
TRACKING BALANCE CHECK
S-CURVE CHECK

When performing the above confirmation, connect a negative terminal of oscilloscope to the TP (VC) as shown below.

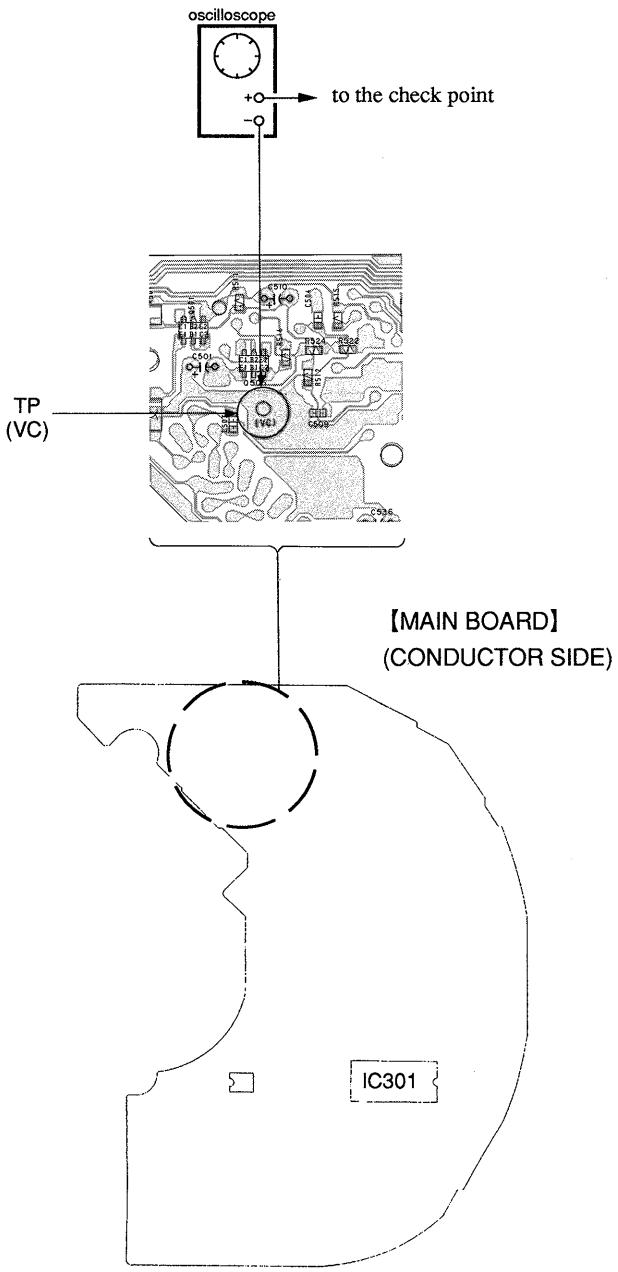

PLL Free Run Frequency Check and Adjustment

Check/Adjustment Procedure :

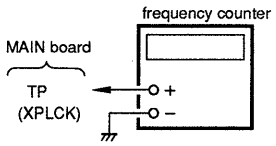

1. Solder to jumper the ASY pin of IC601 pin ㊳.
2. Connect a frequency counter to the TP (XPLCK) of IC601 pin ㊸.
3. Select the Automatic Voltage Adjustment mode of service modes. (See page 6).

LCD Display

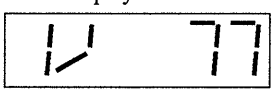

4. Confirm that the frequency counter reading is 4.3218±0.015MHz. If wrong, adjust RV650 so that reading becomes 4.3218±0.015MHz.
5. Cancel the service mode after adjsutment is over.(See page 7).
6. Break the solder jumper to open the ASY pin.

Check/Adjustment Location : MAIN board (CONDUCTOR SIDE)

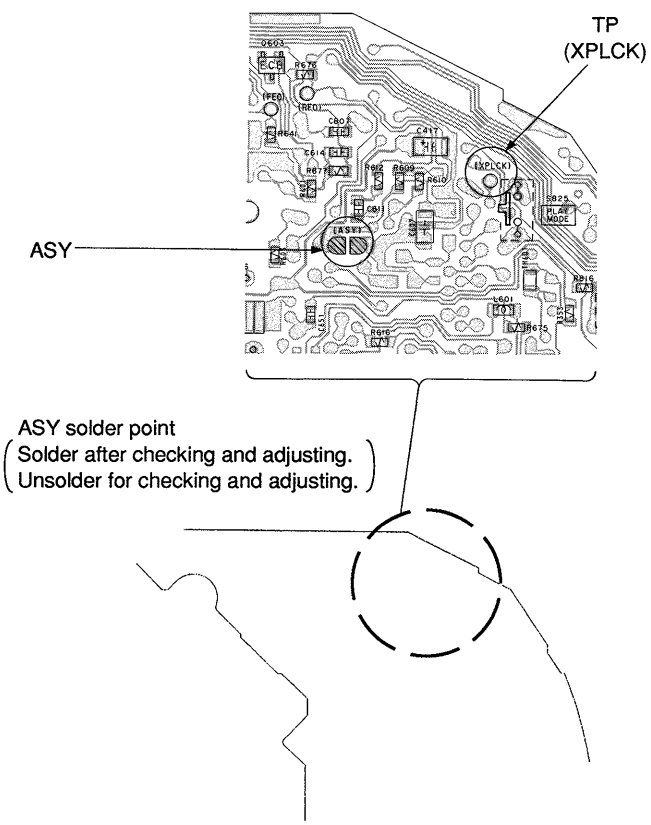

S-Curve Check

Conditions :

The set should be placed either horizontally.

Check Procedure :

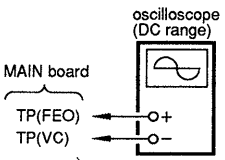

(See page 8)

1. Remove R641 on the FE line.
2. Disconnect the connector (CN502) on the disc motor.
3. Connect a oscilloscope to the MAIN board TP (FEO).
4. Set the disc (YEDS-18).
5. Press the ▶II key 3 times to perform focus serch.
6. Confirm that the A to B rate or B to A rate of oscilloscope waveforms is over 2 : 1, and also the P-P value is 2.5±1Vp-p.

S-Curve check

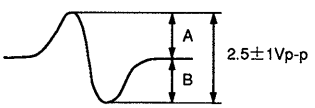

7. After confirmation, reconnect the R641 to FE line and the connector (CN502) to disc motor.

Check Location : MAIN board (CONDUCTOR SIDE)

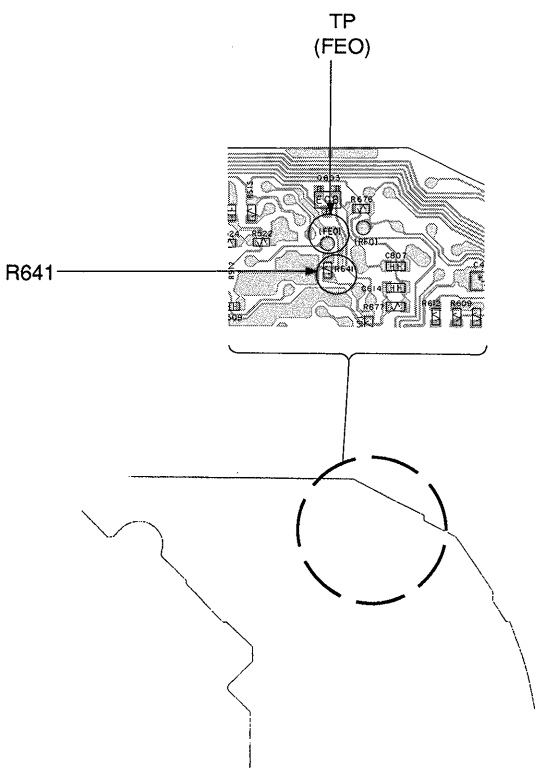

Tracking Balance Check

Conditions :

The set should be placed either horizontally.

Check Procedure :

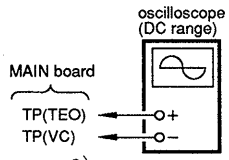

(See page 8)

1. Connect a oscilloscope to the MAIN board TP (TEO).
2. Put the set into STOP condition in service mode (See page 5).
3. Press the ▶II key 1 time.
4. Press the ▶▶I and I◀◀ keys to move the optical pick-up block to the center.
5. Set the disc (YEDS-18).
6. Press the ▶II key 2 times.
   It will go from focus search to focus on, and CLV pull-in mode state. Tracking and sled are OFF.
7. Confirm that the waveform on oscilloscope is vertically symmetric against 0V.

Note : Take sweep time as long as possible to obtain best waveform.

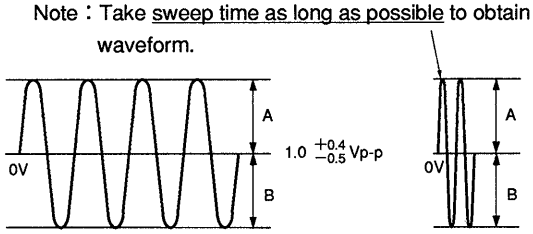

A−B=±0.1V

8. Press the ■ key.
9. After check, release service mode (See page 7).

Check Location : MAIN board (CONDUCTOR SIDE)

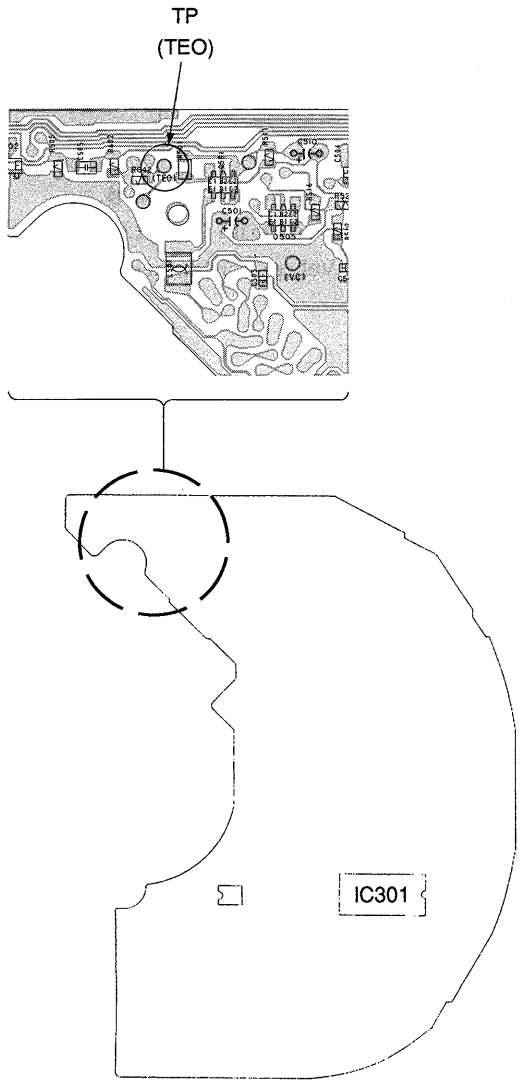

Focus Bias Check

Conditions :

The set should be placed either horizontally

Check Procedure :

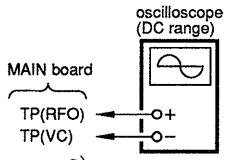

(See page 8)

1. Put the set into STOP condition in service mode (See page 5).
2. Connect a oscilloscope to the MAIN board TP (RFO).
3. Press the ▶II key 1 time.
4. Press the ▶▶I and I◀◀ keys to move the optical pick-up block to the center. (Move the optical pick-up block to the music area on the disc to enable easy visibility of the eye pattern).
5. Put and push the disc (YEDS-18).
6. Press the ▶II key 2 times.
   (It will go from focus search to focus on, and CLV pull-in mode state. Tracking and sled are OFF.)
7. Press the PLAY MODE button (Tracking and sled go ON.)
8. Confirm that clear eye patterns of waveform are generated on the oscilloscope. A good eye pattern means that the diamond shape (◇) in the center of the waveform can be clearly distinguished.

   · RF Signal Reference Waveform (eye pattern)
   VOLT/DIV : 200mV
   TIME/DIV : 500nS

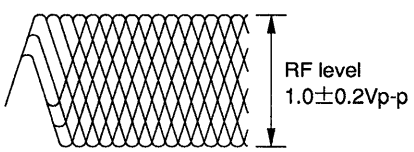

When observing the eye pattern, set the oscilloscope for AC range and raise vertical sensitivity.

9. After check, release service mode (See page 7).

Check Location : MAIN board (CONDUCTOR SIDE)

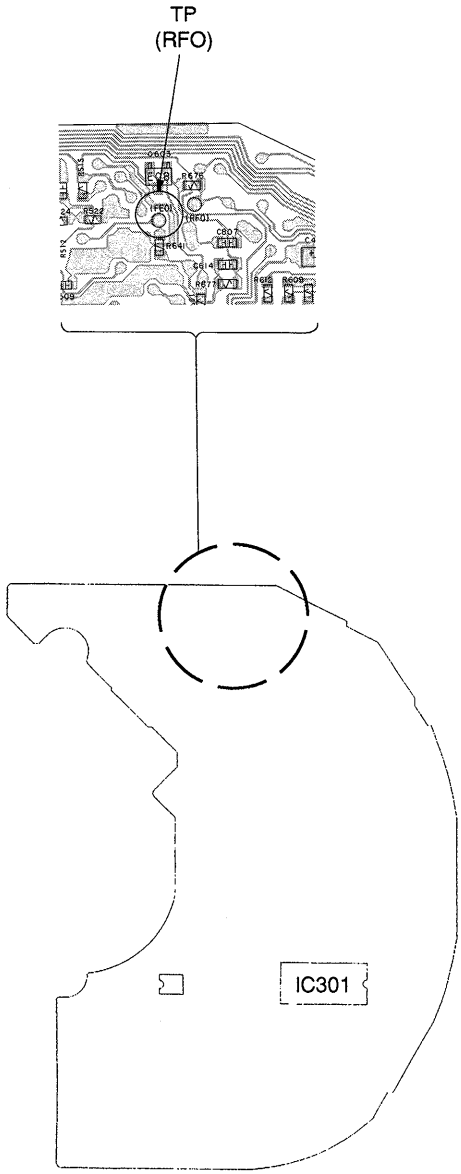

SECTION 4
DIAGRAMS

4-1. IC PIN FUNCTION DESCRIPTION

·IC801 CXP83916-603Q SYSTEM CONTROL IC

Pin No.	Name	I/O	Description
1	WP	I	System stop status reset signal. Stop status is reset at falling edge of input signal.
2	OPEN	I	Door switch signal. Stop status is reset at rising edge of input signal. "H" : OPEN, "L" : CLOSE
3	RMC	I	Infrared remote control signal
4	VCCADJ	O	PWM output for servo power supply adjustment. Approx. 2kHz
6	SENS	I	Input pin of CXD2515Q SENS signal output
7	SCLK	O	Clock signal output for CXD2515Q SENS serial data reading
11	SQCK	O	Clock output pin for input of SUB-Q signal from CXD2515Q
12	SUBQ	I	SUB-Q signal input from CXD2515Q
15	XLDON	O	Laser diode control output. "L" : ON, "H" : OFF
16	MIRR	I	Input pin of CXD2515Q MIRR signal output
18	TEST	I	Test mode selected by input of "L" level at the system reset
20	XRST	O	RESET signal output to CXD2515Q and SM5872BS. Each IC is reset by output of "L" level.
21	PCON	O	Power supply control signal. "L" : POWER ON, "H" : POWER OFF
22	XRSM	I	RESUME switch input. "L" : RESUME ON, "H" : RESUME OFF
23	XHOLD	I	HOLD switch input. "L" : HOLD ON, "H" : HOLD OFF (reset)
24	XDCIN	I	DC-IN detection signal input. "L" : DC-IN detected, "H" : DC-IN not detected
25	XDM1	I	Battery (BP-DM10) connection detect switch input. "L" : Battery connected, "H" : Battery not connected
28	XCHG	O	Battery (BP-DM10) charge control signal output. "L" : Charge
30	SAFE	I	A/D input for CXD2515Q auto gain control setting
31	TCXSL	I	A/D input for model setting
32	VSEL	I	A/D input for servo system power supply voltage setting
33	CHGMNT	I	A/D input for battery (BP-DM10) charge voltage detection
34	BATMNT	I	A/D input for voltage detection of battery (BP-DM10/AM-3) and external power supply
35	VCCMNT	I	A/D input for servo system power supply voltage detection
36	RMKEY	I	A/D input of FR, FF, PLAY/PAUSE, DSP and STOP switches on headphone remote controller
37	KEY	I	A/D input of PLAY/PAUSE, STOP, FF, FR, REPEAT/ENTER, PLAY MODE, DSP, ESP and SURROUND switches
38	XMCRST	I	System reset signal. System is reset by input of "L" level.
39 40	XLTI1 XLTO1	–	Connection of clock oscillating circuit 4.19MHz
41	VSS	–	Ground
43	XLTI2	–	Not used (ground)
44	AVREF	–	Reference voltage input for A/D converter
45	AVSS	–	Ground of A/D converter

Pin No.	Name	I/O	Description
46	VL	O	Control signal to cut off the current flowing into external LCD bias resistor at standby
47 | 49	VLC3 | VLC1	—	LCD bias power supply voltages
50 | 53	COM0 | COM3	O	LCD remote control signals
54 | 73	S00 | S19	O	LCD segment signals
74	LIGHT	O	Backlight control signal. "H" : ON
82	AMUT	O	Mute control signal. "H" : Mute
83	DMUT	O	SM5872BS mute control signal. "H" : Mute
85	LATAU	O	Latch signal output at serial data transfer to SM5872BS
86	CLKO	O	Serial clock to CXD2515Q and SM5872BS
87	DATO	O	Serial data to CXD2515Q and SM5872BS
88	LAT15	O	Latch signal output at serial data transfer to CXD2515Q
89	VDD	—	Power supply
90	NC	—	Not used (connect to VDD)
91	VSS	—	Ground
93	TEX	—	Not used (ground)
94	TRVCNT	O	LPF switch for tracking balance adjustment. "H" : LPF ON
95 | 98	TRV0 | TRV3	O	Resistor selection switch for tracking balance adjustment. "H" : Select
99	SCOR	I	Input pin of CXD2515Q SCOR signal output
100	RMCKI	I	Input of clock signal (for data output) from LCD remote controller. Data is updated by detection of falling edge.

4-2. BLOCK DIAGRAM

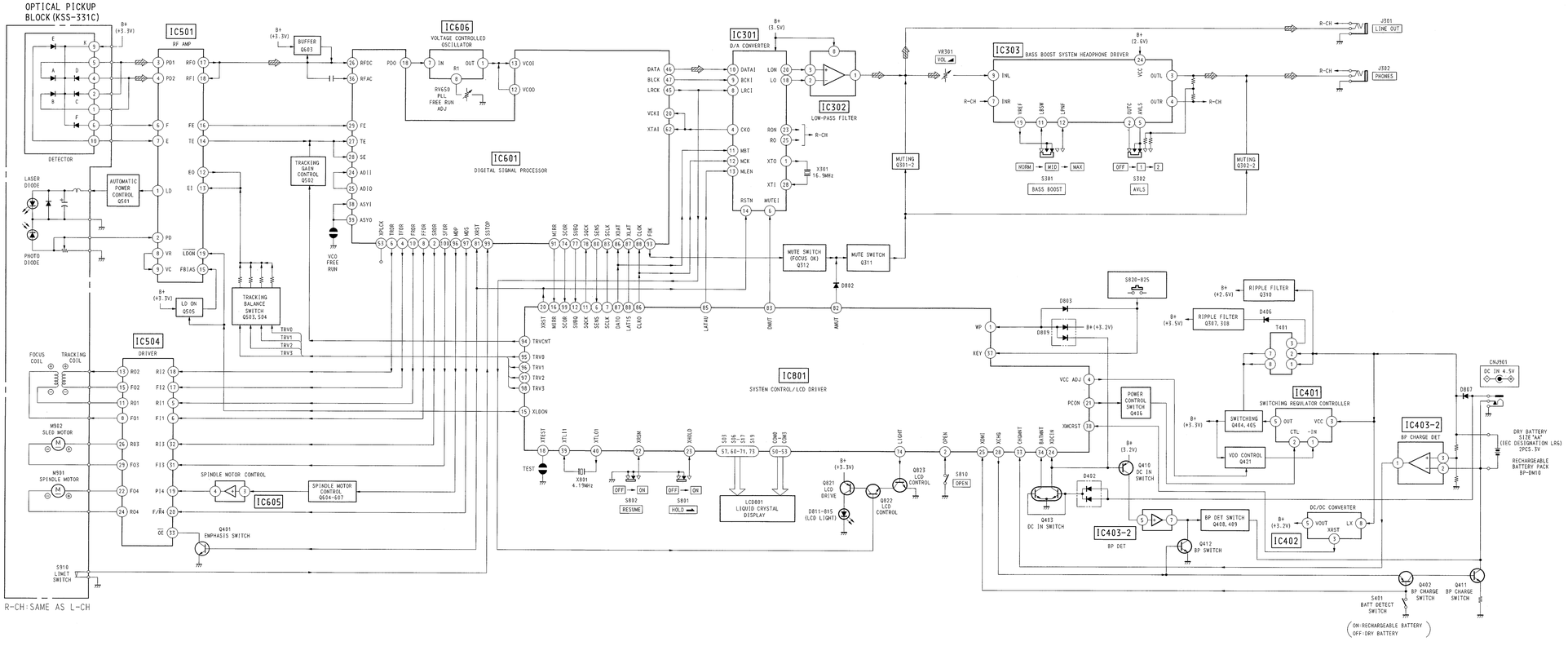

• WAVEFORMS

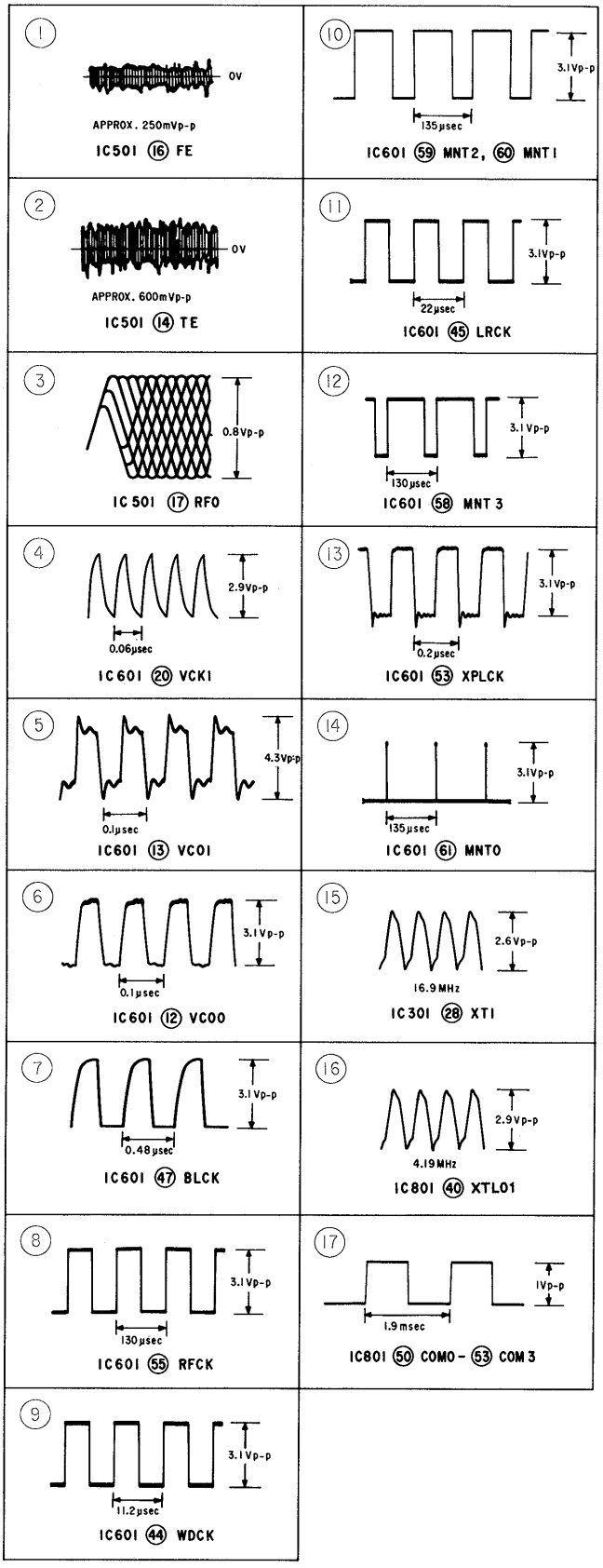
1
0V
APPROX. 250mVp-p
IC501 ⑯ FE
2
0V
APPROX. 600mVp-p
IC501 ⑭ TE
3
0.8Vp-p
IC 501 ⑰ RFO
4
2.9Vp-p
0.06μsec
IC601 ⑳ VCK1
5
4.3Vp-p
0.1μsec
IC601 ⑬ VCO1
6
3.1Vp-p
0.1μsec
IC601 ⑫ VCOO
7
3.1Vp-p
0.48μsec
IC601 ㊼ BLCK
8
3.1Vp-p
130μsec
IC601 ㊺ RFCK
9
3.1Vp-p
11.2μsec
IC601 ㊹ WDCK
10
3.1Vp-p
135μsec
IC601 ㊾ MNT2, ㊿ MNT1
11
3.1Vp-p
22μsec
IC601 ㊺ LRCK
12
3.1Vp-p
130μsec
IC601 ㊽ MNT 3
13
3.1Vp-p
0.2μsec
IC601 ㊸ XPLCK
14
3.1Vp-p
135μsec
IC601 ㊶ MNTO
15
2.6Vp-p
16.9MHz
IC301 ㉘ XTI
16
2.9Vp-p
4.19MHz
IC801 ㊵ XTL01
17
1Vp-p
1.9msec
IC801 ㊿ COMO - ㊸ COM 3

4-3. SCHEMATIC DIAGRAM

●See page 26–29 for IC Block Diagrams.

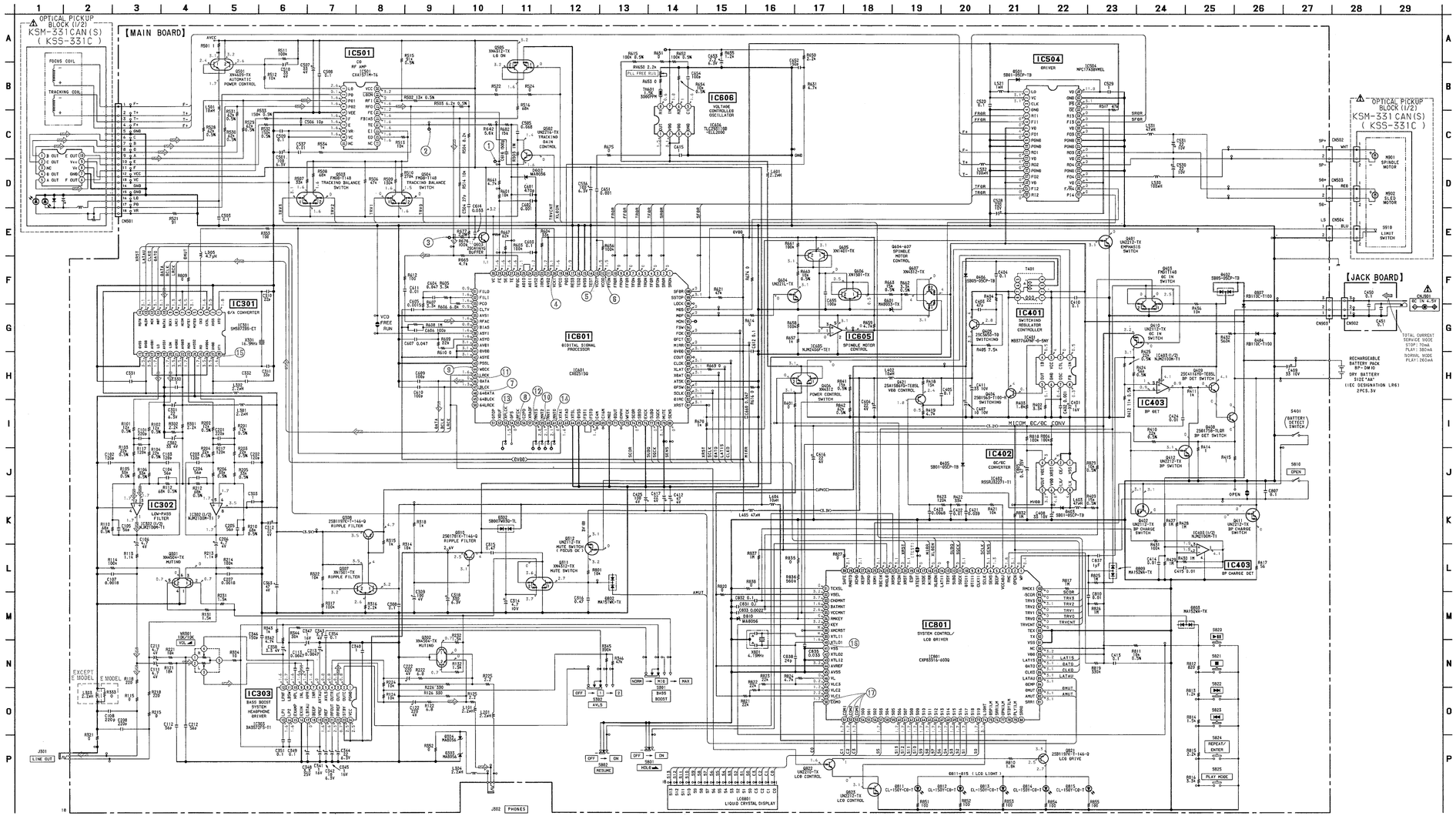

Note:

- All capacitors are in μF unless otherwise noted. pF: μμF 50WV or less are not indicated except for electrolytics and tantalums.
- All resistors are in Ω and ¼W or less unless otherwise specified.
- % : indicates tolerance.
- △ : internal component.

Note: The components identified by mark ⚠ or dotted line with mark ⚠ are critical for safety. Replace only with part number specified.

- ▭ : B+ Line
- ▭ : adjustment for repair.
- Power voltage is dc 4.5V and fed with regulated dc power supply from external JACK BOARD.
- Voltage and waveforms are dc with respect to ground. no mark : PLAY (service mode)
  ✲ : Impossible to measure the voltage at the marked points.
- Voltages are taken with a VOM (Input Impedance 10MΩ). Voltage variations may be noted due to normal production tolerances.
- Waveforms are taken with a oscilloscope. Voltage variations may be noted due to normal production tolerances.
- Circled numbers refer to waveforms.
- Signal path.
  ⇨ : CD

4-4. PRINTED WIRING BOARDS

● Semiconductor Location

Ref. No.	Location	Ref. No.	Location
D302	G-3	Q301	G-5
D303	H-12	Q302	G-3
D304	H-12	Q307	G-3
D402	G-10	Q308	F-3
D403	E-4	Q310	G-11
D404	F-9	Q311	G-4
D405	F-4	Q312	G-3
D406	F-4	Q401	F-10
D501	C-4	Q402	G-10
D601	E-11	Q403	G-10
D602	B-4	Q404	F-5
D802	E-2	Q405	F-11
D803	F-2	Q406	D-12
D807	F-5	Q408	G-9
D809	F-3	Q409	G-4
D810	F-3	Q410	G-10
D811	E-2	Q411	G-5
D812	E-2	Q412	G-5
D813	E-2	Q421	F-4
D814	D-2	Q501	A-10
D815	D-2	Q502	A-8
		Q503	A-6
IC301	F-12	Q504	A-6
IC302	G-3	Q505	B-10
IC303	G-4	Q603	A-11
IC401	F-10	Q604	D-12
IC402	E-4	Q605	E-11
IC403	G-5	Q606	E-11
IC501	B-4	Q607	E-11
IC504	D-4	Q821	D-13
IC601	C-3	Q822	E-13
IC605	E-11	Q823	E-13
IC606	C-2		
IC801	E-3		

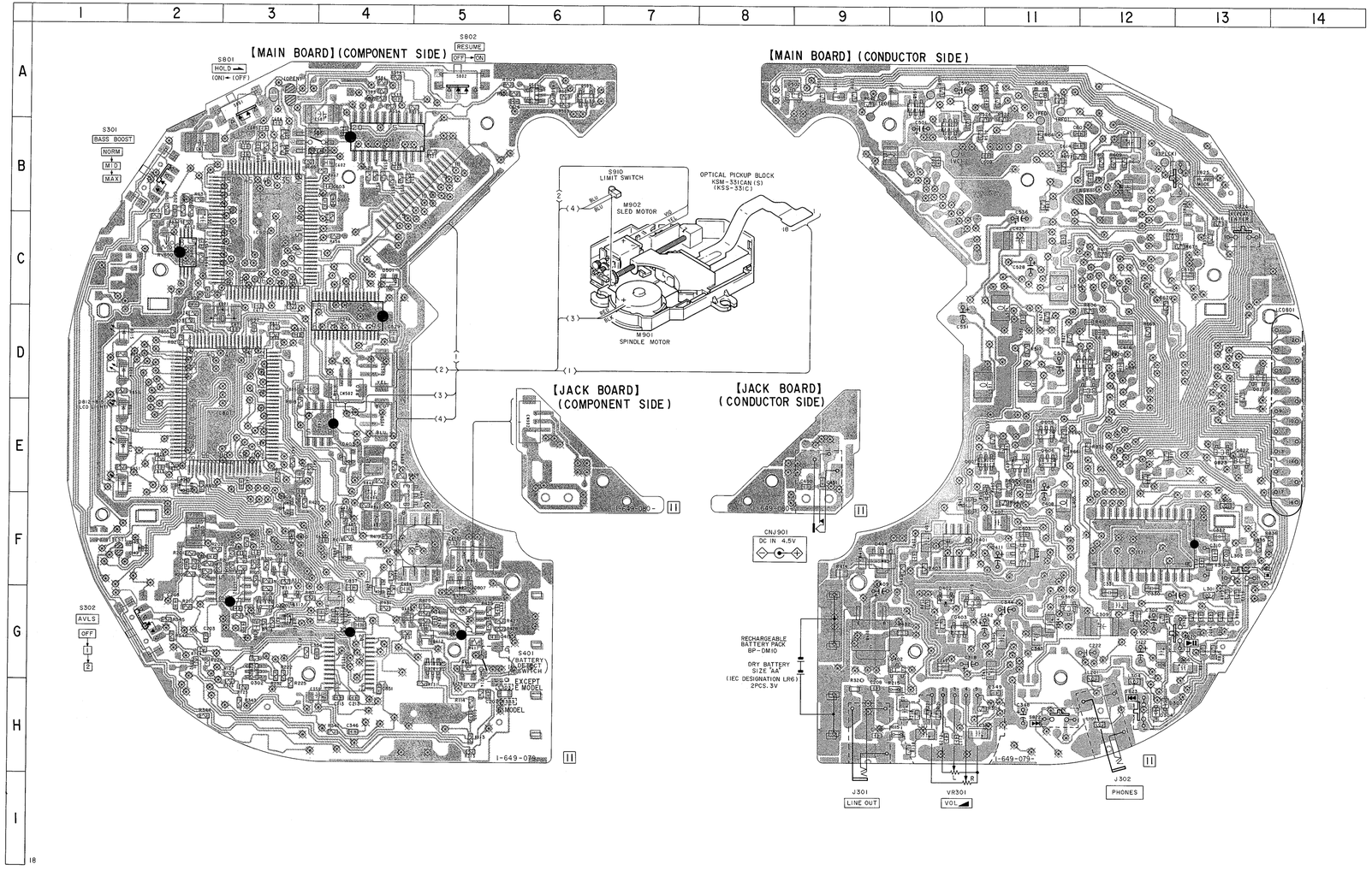

● Semiconductor Lead Layouts

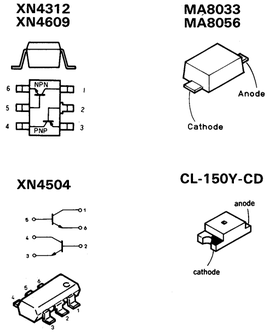

Note:

- ○—— : parts extracted from the component side.
- ▒ : Pattern from the side which enables seeing.

(The other layers' patterns are not indicated.)

Caution:	
Pattern face side: (Conductor Side)	Parts on the pattern face side seen from the pattern face are indicated.
Parts face side: (Component Side)	Parts on the parts face side seen from the parts face are indicated.

● ⊗ : Through hole.

4-5. IC BLOCK DIAGRAMS

IC301 SM5872BS-ET

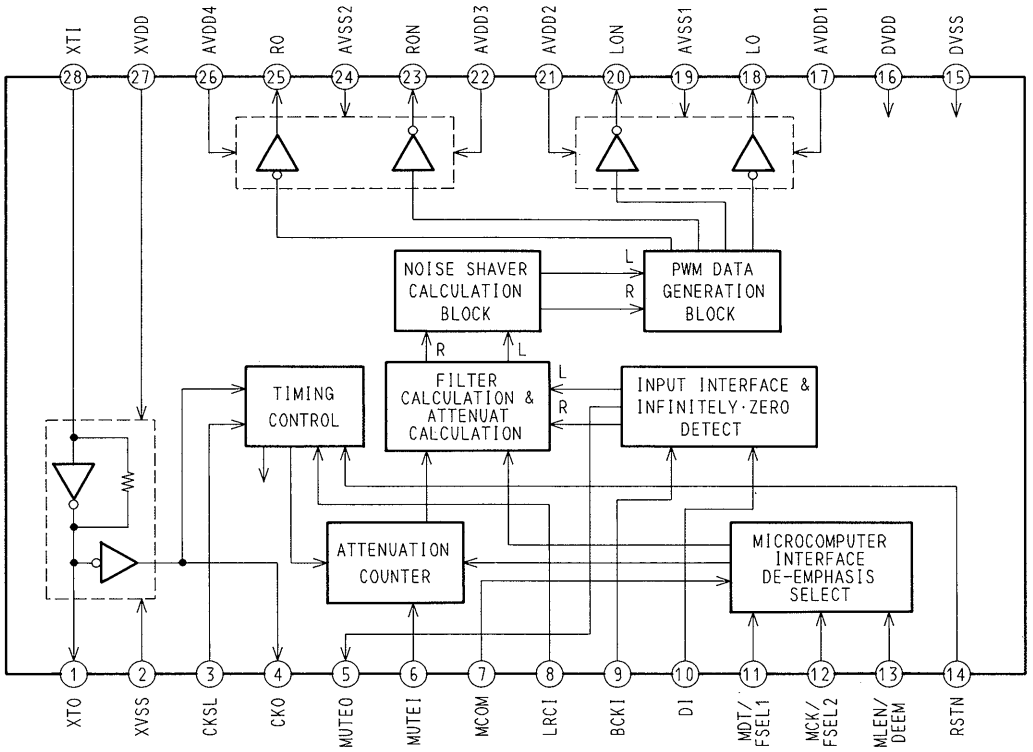

IC303 BA3572FS

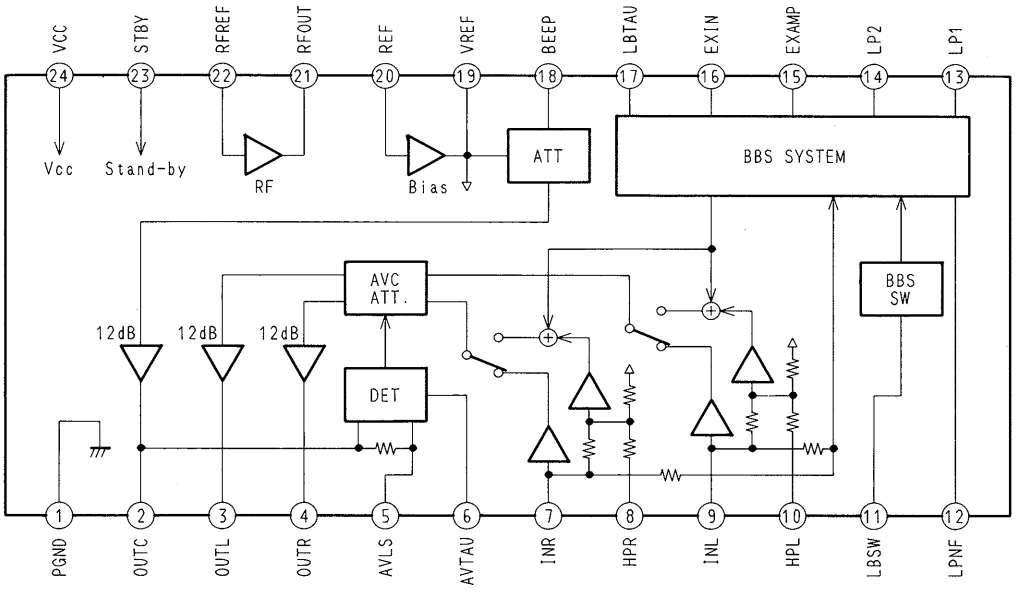

IC401 MB3776APNF-G-SNY-ER

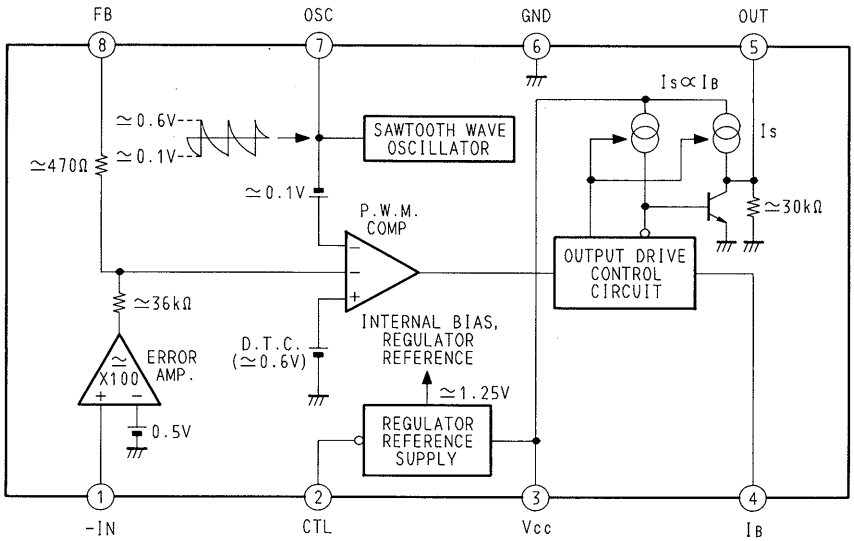

IC402 RS5RJ32271-T1

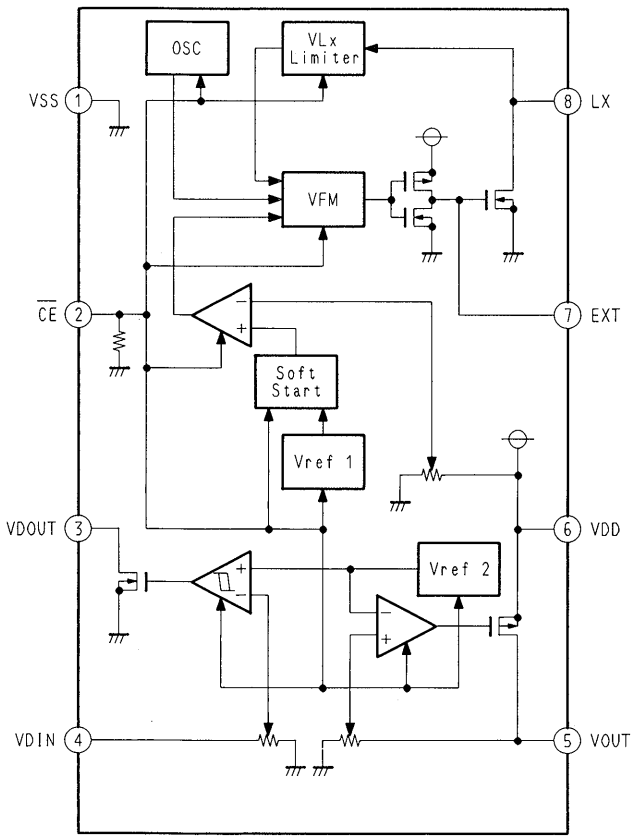

IC501 CXA1571M

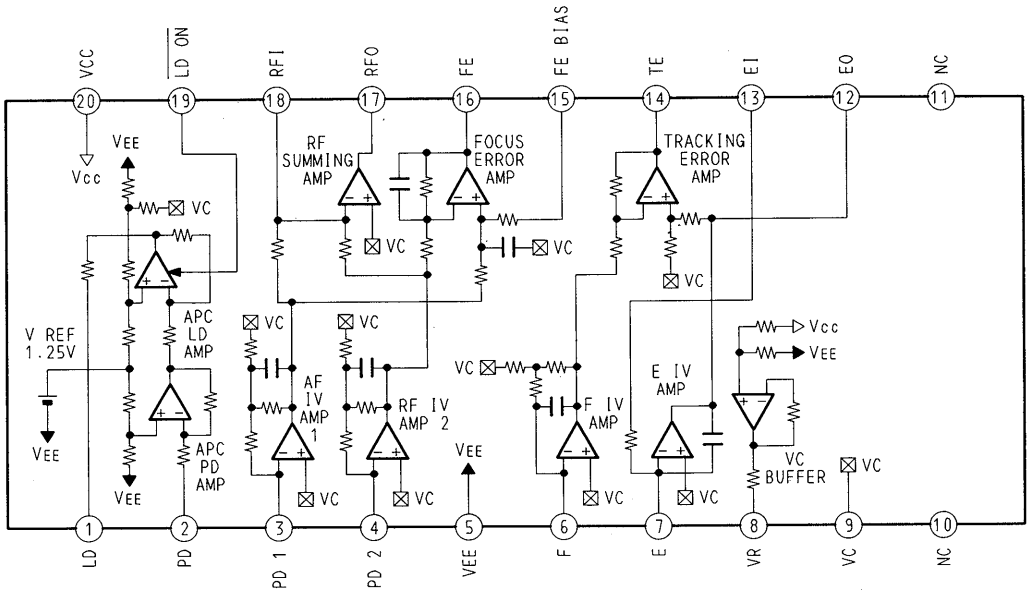

IC504 MPC17A38VMEL

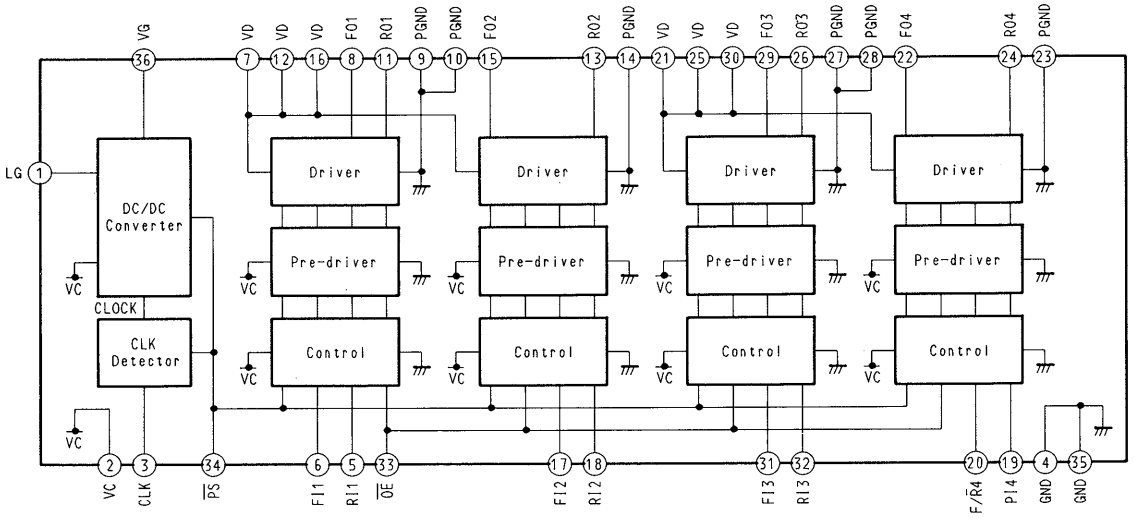

IC601 CXD2515Q

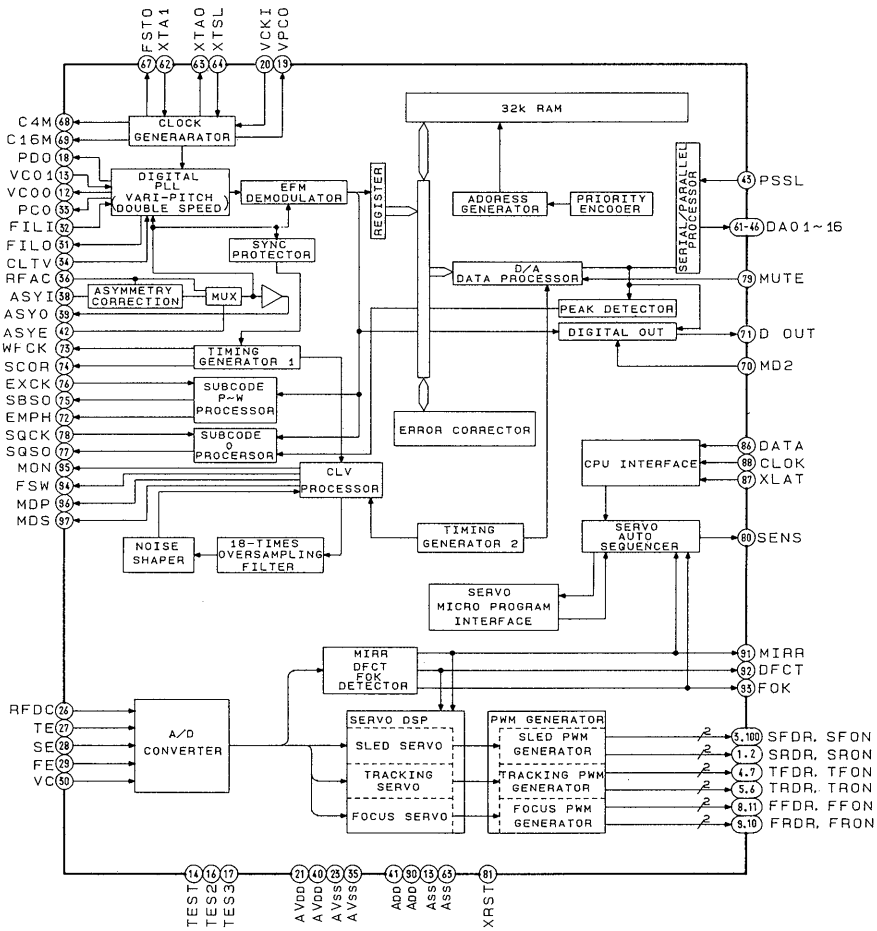

IC606 TLC2931IDB-ELL1000

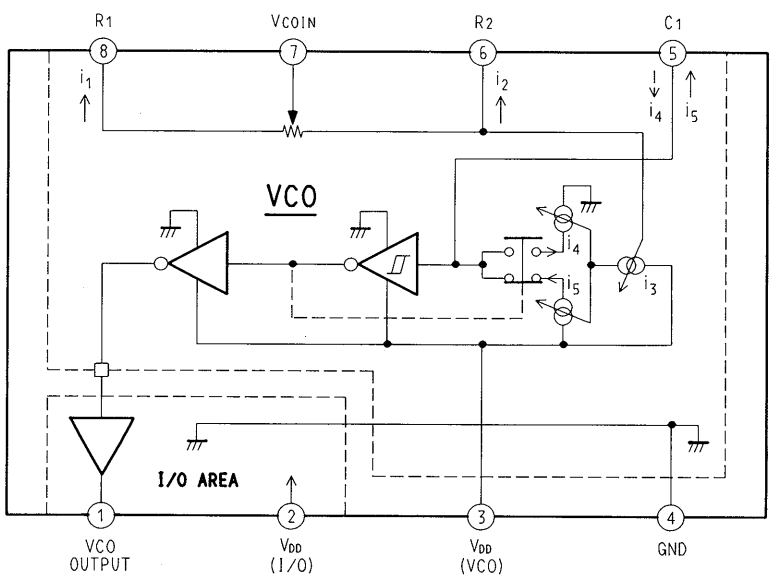

SECTION 5
EXPLODED VIEWS

NOTE:
- -xx,-x mean standardized parts, so they may have some differences from the original one.
- Color Indication of Appearance Parts
  Example:
  KNOB, BALANCE (WHITE)...(RED)
  ↑ Parts color ↑ Cabinet's color
- Items marked "*" are not stocked since they are seldom required for routine service. Some delay should be anticipated when ordering these items.
- The mechanical parts with no reference number in the exploded views are not supplied.
- Hardware (#mark) list is given in the last of this parts list.

The components identified by mark ⚠ or dotted line with mark. ⚠ are critical for safety. Replace only with part number specified.

- Abbreviations
  AEL: French, Austrian, East European, Swiss, Italian, German
  AEC: Netherlands, North European, Spanish, Belgium, Poland
  C & SA: Central and South America

5-1. CABINET SECTION

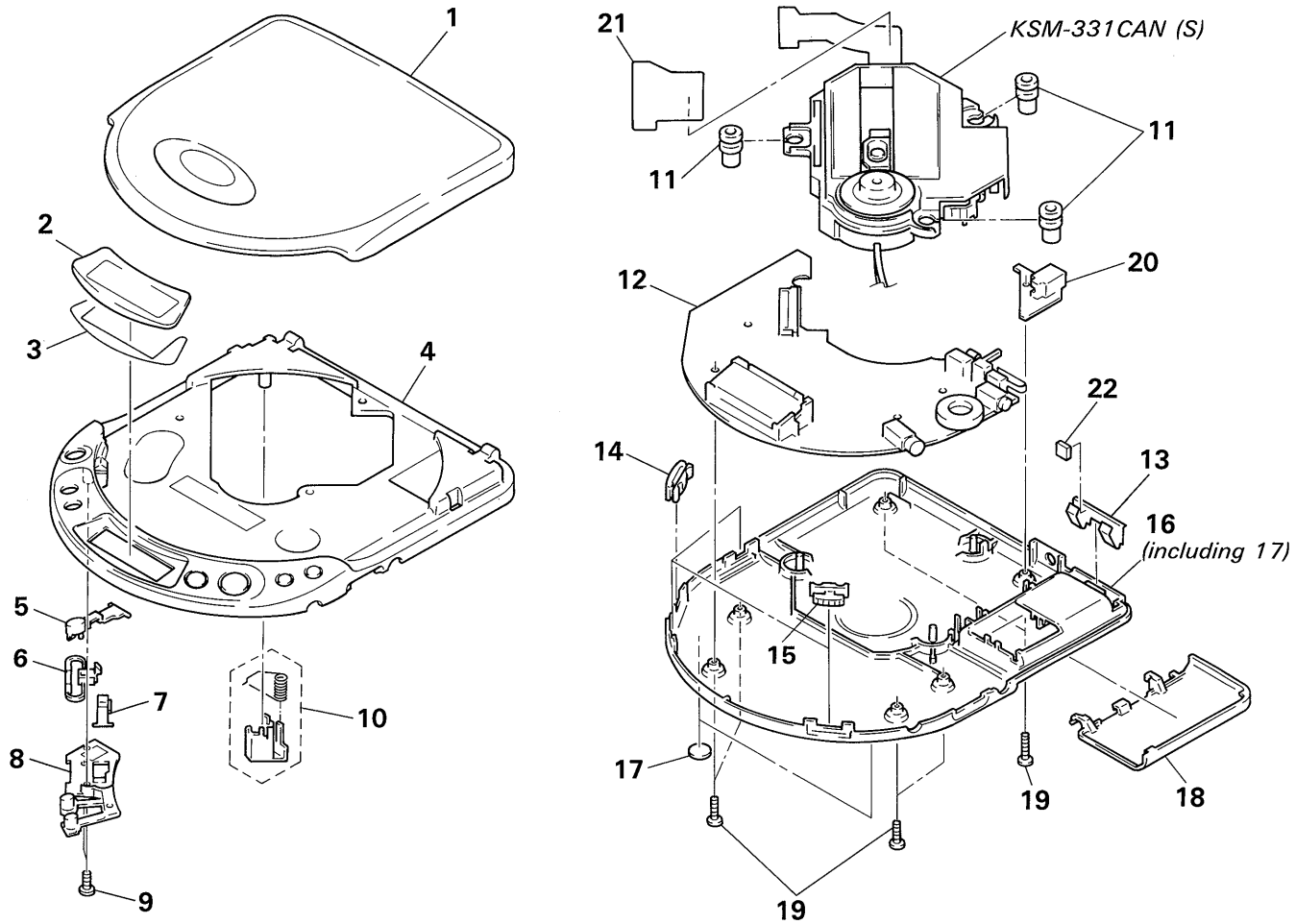

Ref.No.	Part No.	Description	Remark
1	4-958-390-01	PANEL, UPPER	
2	4-958-394-01	WINDOW (LCD)	
*3	4-958-416-01	SHEET (LCD), ADHESIVE	
4	X-4943-669-1	CABINET ASSY	
5	4-958-393-01	BUTTON (OPEN)	
6	4-958-391-01	CLAW, LOCK	
7	4-958-406-01	BUTTON (SW)	
8	4-958-392-01	BUTTON (PE)	
9	4-947-203-01	SCREW (M2X6)	
10	X-4943-671-1	BRACKET ASSY	
11	4-947-759-01	INSULATOR (I)	

Ref.No.	Part No.	Description	Remark
12	A-3275-976-A	MAIN BOARD, COMPLETE (US,AEC,AEL,C&A)	
12	A-3276-159-A	MAIN BOARD, COMPLETE (E)	
13	4-958-415-01	TERMINAL BOARD (RELAY), BATTERY	
14	4-958-397-01	KNOB (HOLD)	
15	4-958-396-01	KNOB (S)	
16	X-4943-670-1	PANEL ASSY, BOTTOM	
17	4-912-641-01	FOOT, RUBBER	
18	4-958-395-01	LID, BATTERY CASE	
19	3-336-395-01	SCREW (B2X10) (G), TAPPING	
*20	1-649-080-11	JACK BOARD	
*21	4-956-818-01	RETAINER, FLEXIBLE	
22	9-911-841-XX	CUSHION, CASSETTE LID	

5-2. OPTICAL PICK-UP MECHANISM SECTION (KSM-331CAN (S))

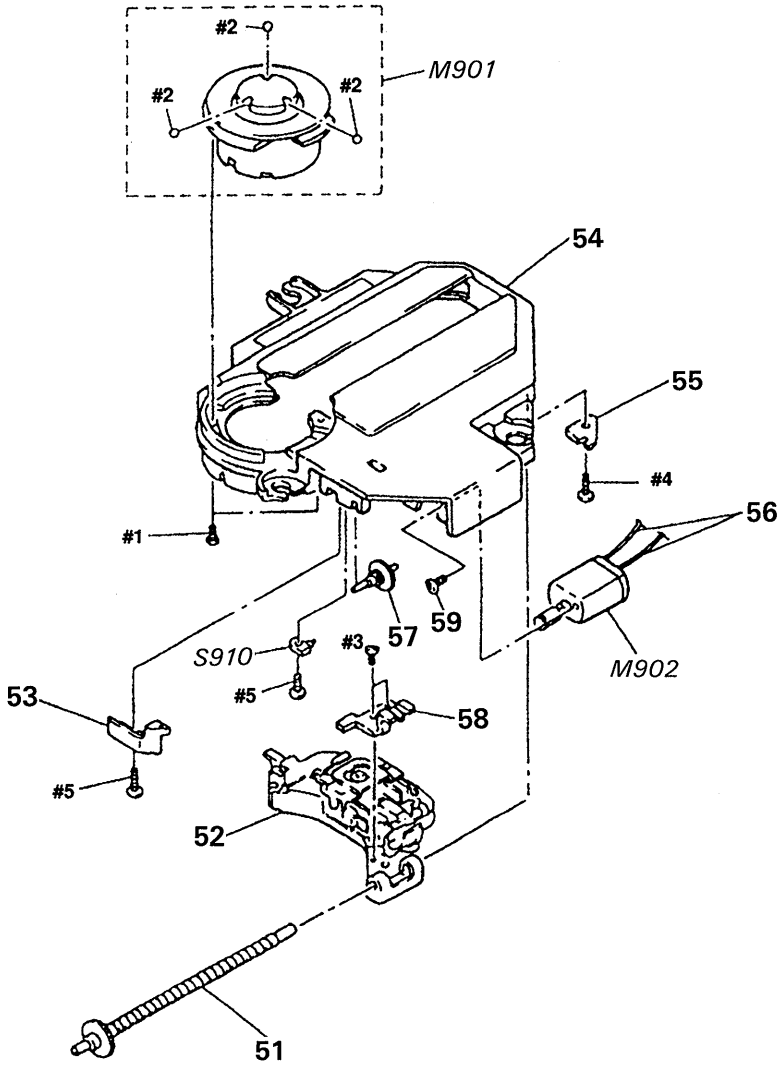

The components identified by mark ⚠ or dotted line with mark. ⚠ are critical for safety. Replace only with part number specified.

Ref.No.	Part No.	Description	Remark
51	X-2625-483-1	SCREW ASSY, SLED	
⚠52	8-848-295-21	DEVICE, OPTICAL KSS-331C	
53	2-625-412-02	SPRING, SLED	
54	2-625-415-02	CHASSIS, MD	
55	2-625-411-01	RETAINER, SHAFT	
56	1-948-418-21	HARNESS	
57	2-625-410-01	GEAR (B)	
58	2-625-414-02	RACK	
59	3-732-988-01	SCREW (M2X2.5)	
M901	X-2625-485-1	MOTOR ASSY, T.T. SPINDLE	
M902	X-2625-171-2	MOTOR ASSY, SLED	
S910	1-570-771-11	SWITCH (LIMIT)	

SECTION 6
ELECTRICAL PARTS LIST

JACK **MAIN**

NOTE:
- Due to standardization, replacements in the parts list may be different from the parts specified in the diagrams or the components used on the set.
- -XX and -X mean standardized parts, so they may have some difference from the original one.
- RESISTORS
  All resistors are in ohms.
  METAL: Metal-film resistor.
  METAL OXIDE: Metal oxide-film resistor.
  F: nonflammable
- Items marked "*" are not stocked since they are seldom required for routine service. Some delay should be anticipated when ordering these items.
- SEMICONDUCTORS
  In each case, u : μ, for example:
  uA··· : μA···, uPA··· : μPA···, uPB··· : μPB···, uPC··· : μPC···, uPD··· : μPD···
- CAPACITORS
  uF : μF
- COILS
  uH : μH

When indicating parts by reference number, please include the board.

The components identified by mark ⚠ or dotted line with mark. ⚠ are critical for safety. Replace only with part number specified.

- Abbreviations
  AEL: French, Austrian, East European, Swiss, Italian, German
  AEC: Netherlands, North European, Spanish, Belgium, Poland
  C & SA: Central and South America

Ref.No.	Part No.	Description			Remark
*	1-649-080-11	JACK BOARD			
		**********			
		< CAPACITOR >			
C450	1-164-360-11	CERAMIC CHIP	0.1uF		16V
C451	1-164-360-11	CERAMIC CHIP	0.1uF		16V
		< CONNECTOR >			
CN902	1-691-550-11	PIN, CONNECTOR (1.5MM)(SMD) 3P			
		< JACK >			
⚠CNJ901	1-568-907-31	JACK,DC(POLARITY UNIFEID TYPE) (DC IN 4.5V)			
**********					
	A-3275-976-A	MAIN BOARD, COMPLETE (EXCEPT E)			
	A-3276-159-A	MAIN BOARD, COMPLETE (E)			
		**********			
	4-958-407-01	HOLDER (LCD)			
	4-958-408-01	SHEET, DIFFUSION			
	4-958-412-01	TERMINAL BOARD (+), BATTERY			
	X-4943-734-1	TERMINAL BOARD(-)ASSY, BATTERY			
		< CAPACITOR >			
C101	1-162-957-11	CERAMIC CHIP	220PF	5%	50V
C102	1-162-928-11	CERAMIC CHIP	120PF	5%	50V
C103	1-162-928-11	CERAMIC CHIP	120PF	5%	50V
C104	1-162-924-11	CERAMIC CHIP	56PF	5%	50V
C105	1-162-924-11	CERAMIC CHIP	56PF	5%	50V
C106	1-135-151-21	TANTALUM CHIP	4.7uF	20%	4V
C107	1-162-977-11	CERAMIC CHIP	0.0018uF	10%	50V
C108	1-162-960-11	CERAMIC CHIP	220PF	10%	50V
C111	1-135-151-21	TANTALUM CHIP	4.7uF	20%	4V
C112	1-162-950-11	CERAMIC CHIP	56PF	5%	50V
C113	1-162-968-11	CERAMIC CHIP	0.0047uF	10%	50V
C122	1-124-434-00	ELECT	220uF	20%	4V
C201	1-162-957-11	CERAMIC CHIP	220PF	5%	50V
C202	1-162-928-11	CERAMIC CHIP	120PF	5%	50V
C203	1-162-928-11	CERAMIC CHIP	120PF	5%	50V
C204	1-162-924-11	CERAMIC CHIP	56PF	5%	50V
C205	1-162-924-11	CERAMIC CHIP	56PF	5%	50V
C206	1-135-151-21	TANTALUM CHIP	4.7uF	20%	4V
C207	1-162-977-11	CERAMIC CHIP	0.0018uF	10%	50V
C208	1-162-960-11	CERAMIC CHIP	220PF	10%	50V
C211	1-135-151-21	TANTALUM CHIP	4.7uF	20%	4V
C212	1-162-950-11	CERAMIC CHIP	56PF	5%	50V
C213	1-162-968-11	CERAMIC CHIP	0.0047uF	10%	50V
C222	1-124-434-00	ELECT	220uF	20%	4V
C301	1-126-153-11	ELECT	22uF	20%	6.3V
C302	1-124-431-00	ELECT	33uF	20%	4V
C303	1-164-346-11	CERAMIC CHIP	1uF		16V
C308	1-163-038-00	CERAMIC CHIP	0.1uF		25V
C309	1-104-848-91	TANTAL. CHIP	100uF	20%	4V
C310	1-162-919-11	CERAMIC CHIP	22PF	5%	50V
C311	1-162-921-11	CERAMIC CHIP	33PF	5%	50V
C312	1-104-847-91	TANTAL. CHIP	22uF	20%	4V
C314	1-135-210-11	TANTALUM CHIP	4.7uF	20%	10V
C315	1-164-005-11	CERAMIC CHIP	0.47uF		25V
C316	1-164-005-11	CERAMIC CHIP	0.47uF		25V
C318	1-128-057-11	ELECT	330uF	20%	6.3V
C330	1-164-346-11	CERAMIC CHIP	1uF		16V
C331	1-164-346-11	CERAMIC CHIP	1uF		16V
C332	1-164-346-11	CERAMIC CHIP	1uF		16V
C340	1-164-346-11	CERAMIC CHIP	1uF		16V
C341	1-135-091-91	TANTAL. CHIP	1uF	20%	16V
C342	1-126-157-11	ELECT	10uF	20%	16V
C343	1-135-221-11	TANTAL. CHIP	3.3uF	20%	4V
C344	1-126-153-11	ELECT	22uF	20%	6.3V
C345	1-135-091-91	TANTAL. CHIP	1uF	20%	16V
C346	1-162-955-11	CERAMIC CHIP	150PF	5%	50V
C347	1-135-091-91	TANTAL. CHIP	1uF	20%	16V
C348	1-126-162-11	ELECT	3.3uF	20%	50V
C349	1-164-360-11	CERAMIC CHIP	0.1uF		16V
C350	1-135-221-11	TANTAL. CHIP	3.3uF	20%	4V
C351	1-164-360-11	CERAMIC CHIP	0.1uF		16V
C354	1-164-360-11	CERAMIC CHIP	0.1uF		16V
C363	1-135-163-21	TANTAL. CHIP	47uF	20%	4V
C401	1-135-091-91	TANTAL. CHIP	1uF	20%	16V
C402	1-162-964-11	CERAMIC CHIP	0.001uF	10%	50V

Ref.No.	Part No.	Description			Remark
C403	1-162-949-11	CERAMIC CHIP	47PF	5%	50V
C404	1-164-004-11	CERAMIC CHIP	0.1uF	10%	25V
C405	1-164-004-11	CERAMIC CHIP	0.1uF	10%	25V
C406	1-135-202-21	TANTAL. CHIP	22uF	20%	4V
C407	1-135-216-11	TANTALUM CHIP	10uF	20%	10V
C408	1-127-561-11	ELECT(SOLID)	33uF	20%	10V
C409	1-124-229-00	ELECT	33uF	20%	10V
C410	1-164-360-11	CERAMIC CHIP	0.1uF		16V
C411	1-127-561-11	ELECT(SOLID)	33uF	20%	10V
C412	1-135-163-21	TANTAL. CHIP	47uF	20%	4V
C413	1-164-360-11	CERAMIC CHIP	0.1uF		16V
C414	1-162-974-11	CERAMIC CHIP	0.01uF		50V
C415	1-162-974-11	CERAMIC CHIP	0.01uF		50V
C416	1-135-202-21	TANTAL. CHIP	22uF	20%	4V
C417	1-135-202-21	TANTAL. CHIP	22uF	20%	4V
C421	1-162-587-11	CERAMIC CHIP	0.039uF	10%	25V
C422	1-162-970-11	CERAMIC CHIP	0.01uF	10%	25V
C423	1-162-969-11	CERAMIC CHIP	0.0068uF	10%	25V
C424	1-162-974-11	CERAMIC CHIP	0.01uF		50V
C425	1-104-848-91	TANTAL. CHIP	100uF	20%	4V
C501	1-124-584-00	ELECT	100uF	20%	10V
C503	1-164-360-11	CERAMIC CHIP	0.1uF		16V
C504	1-162-946-11	CERAMIC CHIP	27PF	5%	50V
C505	1-164-344-11	CERAMIC CHIP	0.068uF	10%	25V
C506	1-162-941-11	CERAMIC CHIP	10PF	0.5PF	50V
C507	1-135-162-21	TANTALUM CHIP	33uF	20%	6.3V
C508	1-164-360-11	CERAMIC CHIP	0.1uF		16V
C509	1-164-360-11	CERAMIC CHIP	0.1uF		16V
C510	1-124-431-00	ELECT	33uF	20%	4V
C520	1-164-360-11	CERAMIC CHIP	0.1uF		16V
C528	1-128-241-11	ELECT	220uF	20%	10V
C529	1-164-346-11	CERAMIC CHIP	1uF		16V
C530	1-126-530-11	ELECT	22uF	20%	10V
C531	1-126-530-11	ELECT	22uF	20%	10V
C536	1-124-584-00	ELECT	100uF	20%	10V
C537	1-162-974-11	CERAMIC CHIP	0.01uF		50V
C601	1-162-962-11	CERAMIC CHIP	470PF	10%	50V
C602	1-163-141-00	CERAMIC CHIP	0.001uF	5%	50V
C603	1-164-360-11	CERAMIC CHIP	0.1uF		16V
C604	1-164-361-11	CERAMIC CHIP	0.047uF		16V
C605	1-162-965-11	CERAMIC CHIP	0.0015uF	10%	50V
C606	1-162-953-11	CERAMIC CHIP	100PF	5%	50V
C607	1-163-075-00	CERAMIC CHIP	0.047uF	10%	25V
C609	1-162-953-11	CERAMIC CHIP	100PF	5%	50V
C610	1-162-953-11	CERAMIC CHIP	100PF	5%	50V
C611	1-162-974-11	CERAMIC CHIP	0.01uF		50V
C612	1-164-360-11	CERAMIC CHIP	0.1uF		16V
C614	1-164-373-11	CERAMIC CHIP	0.033uF		25V
C615	1-164-346-11	CERAMIC CHIP	1uF		16V
C616	1-162-965-11	CERAMIC CHIP	0.0015uF	10%	50V
C651	1-162-964-11	CERAMIC CHIP	0.001uF	10%	50V
C652	1-164-217-11	CERAMIC CHIP	150PF	5%	50V
C653	1-135-149-21	TANTALUM CHIP	2.2uF	20%	10V
C654	1-162-927-11	CERAMIC CHIP	100PF	5%	50V
C655	1-162-953-11	CERAMIC CHIP	100PF	5%	50V
C660	1-164-361-11	CERAMIC CHIP	0.047uF		16V
C805	1-135-145-11	TANTALUM CHIP	0.47uF	10%	35V
C807	1-164-360-11	CERAMIC CHIP	0.1uF		16V
C810	1-162-970-11	CERAMIC CHIP	0.01uF	10%	25V
C831	1-164-360-11	CERAMIC CHIP	0.1uF		16V
C832	1-164-360-11	CERAMIC CHIP	0.1uF		16V
C833	1-162-966-11	CERAMIC CHIP	0.0022uF	10%	50V
C835	1-164-677-11	CERAMIC CHIP	0.033uF	10%	16V
C837	1-164-346-11	CERAMIC CHIP	1uF		16V
C838	1-164-456-11	CERAMIC CHIP	24PF	5%	50V

< CONNECTOR >

CN501	1-566-534-11	CONNECTOR, FPC (ZIF) 18P	
*CN502	1-695-320-11	PIN, CONNECTOR (1.5MM)(SMD) 2P	
*CN503	1-695-320-31	PIN, CONNECTOR (1.5MM)(SMD) 2P	
*CN504	1-695-320-51	PIN, CONNECTOR (1.5MM)(SMD) 2P	
CN903	1-691-550-11	PIN, CONNECTOR (1.5MM)(SMD) 3P	

< DIODE >

D302	8-719-988-78	DIODE	SB007W03Q
D303	8-719-422-46	DIODE	MA8056
D304	8-719-422-46	DIODE	MA8056
D402	8-719-400-18	DIODE	MA152WK
D403	8-719-938-72	DIODE	SB01-05CP
D404	8-719-975-33	DIODE	RB110C
D405	8-719-938-72	DIODE	SB01-05CP
D406	8-719-938-75	DIODE	SB05-05CP
D501	8-719-938-72	DIODE	SB01-05CP
D601	8-719-017-79	DIODE	MA8033
D602	8-719-422-46	DIODE	MA8056
D802	8-719-400-18	DIODE	MA152WK
D803	8-719-400-20	DIODE	MA152WA
D807	8-719-975-33	DIODE	RB110C
D809	8-719-400-20	DIODE	MA152WA
D810	8-719-422-46	DIODE	MA8056
D811	8-719-987-41	LED	CL-150Y-CD (LCD LIGHT)
D812	8-719-987-41	LED	CL-150Y-CD (LCD LIGHT)
D813	8-719-987-41	LED	CL-150Y-CD (LCD LIGHT)
D814	8-719-987-41	LED	CL-150Y-CD (LCD LIGHT)
D815	8-719-987-41	LED	CL-150Y-CD (LCD LIGHT)

MAIN

Ref.No.	Part No.	Description	Remark
		< IC >	
IC301	8-759-090-80	IC SM5872BS-ET	
IC302	8-759-710-55	IC NJM2100M	
IC303	8-759-179-62	IC BA3572FS	
IC401	8-759-097-95	IC MB3776APNF-G-SNY-ER	
IC402	8-759-176-73	IC RS5RJ32271-T1	
IC403	8-759-710-55	IC NJM2100M	
IC501	8-752-059-38	IC CXA1571M	
IC504	8-759-179-60	IC MPC17A38VMEL	
IC601	8-752-351-94	IC CXD2515Q	
IC605	8-759-710-82	IC NJM2406F	
IC606	8-759-177-71	IC TLC2931IDB-ELL1000	
IC801	8-752-845-09	IC CXP83916-603Q	
		< JACK >	
J301	1-565-287-41	JACK (LINE OUT)	
J302	1-565-287-11	JACK (PHONES)	
		< COIL >	
L101	1-410-997-31	INDUCTOR CHIP 2.2uH	
L201	1-410-997-31	INDUCTOR CHIP 2.2uH	
L301	1-410-997-31	INDUCTOR CHIP 2.2uH	
L302	1-410-997-31	INDUCTOR CHIP 2.2uH	
L303	1-410-997-31	INDUCTOR CHIP 2.2uH (EXCEPT E)	
L304	1-410-997-31	INDUCTOR CHIP 2.2uH	
L305	1-412-002-31	INDUCTOR CHIP 4.7uH	
L402	1-412-622-51	INDUCTOR 10uH	
L403	1-412-630-51	INDUCTOR 47uH	
L404	1-412-029-11	INDUCTOR CHIP 10uH	
L405	1-412-031-11	INDUCTOR CHIP 47uH	
L501	1-412-029-11	INDUCTOR CHIP 10uH	
L521	1-410-980-51	INDUCTOR CHIP 1mH	
L530	1-412-039-51	INDUCTOR CHIP 100uH	
L531	1-412-630-51	INDUCTOR 47uH	
L532	1-412-039-51	INDUCTOR CHIP 100uH	
L601	1-410-997-31	INDUCTOR CHIP 2.2uH	
		< LIQUID CRYSTAL DISPLAY >	
LCD801	1-810-123-11	DISPLAY PANEL, LIQUID CRYSTAL	
		< TRANSISTOR >	
Q301	8-729-425-18	TRANSISTOR XN4504	
Q302	8-729-425-18	TRANSISTOR XN4504	
Q307	8-729-402-13	TRANSISTOR XN1501	
Q308	8-729-904-86	TRANSISTOR 2SB1197K-Q	
Q310	8-729-921-71	TRANSISTOR 2SD1781K-Q	
Q311	8-729-420-20	TRANSISTOR XN4312	
Q312	8-729-424-12	TRANSISTOR UN2112	
Q401	8-729-424-59	TRANSISTOR UN2212	
Q402	8-729-424-12	TRANSISTOR UN2112	
Q403	8-729-920-56	TRANSISTOR FMG1	
Q404	8-729-923-36	TRANSISTOR 2SD1963-Q.R	
Q405	8-729-022-67	TRANSISTOR 2SC3650-TD	
Q406	8-729-420-20	TRANSISTOR XN4312	
Q408	8-729-922-34	TRANSISTOR 2SD1758F5-QR	
Q409	8-729-230-63	TRANSISTOR 2SC4116-YG	
Q410	8-729-424-12	TRANSISTOR UN2112	
Q411	8-729-424-59	TRANSISTOR UN2212	
Q412	8-729-424-59	TRANSISTOR UN2212	
Q421	8-729-230-60	TRANSISTOR 2SA1586-YG	
Q501	8-729-402-90	TRANSISTOR XN4609	
Q502	8-729-424-67	TRANSISTOR UN2216	
Q503	8-729-924-79	TRANSISTOR FMG8	
Q504	8-729-924-79	TRANSISTOR FMG8	
Q505	8-729-420-20	TRANSISTOR XN4312	
Q603	8-729-230-63	TRANSISTOR 2SC4116-YG	
Q604	8-729-424-90	TRANSISTOR UN221L	
Q605	8-729-403-42	TRANSISTOR XN1401	
Q606	8-729-402-13	TRANSISTOR XN1501	
Q607	8-729-420-20	TRANSISTOR XN4312	
Q821	8-729-904-86	TRANSISTOR 2SB1197K-Q	
Q822	8-729-424-76	TRANSISTOR UN2210	
Q823	8-729-424-59	TRANSISTOR UN2212	
		< RESISTOR >	
R101	1-216-834-11	METAL CHIP 12K 5% 1/16W	
R102	1-216-834-11	METAL CHIP 12K 5% 1/16W	
R103	1-218-724-11	METAL CHIP 22K 0.5% 1/16W	
R104	1-218-724-11	METAL CHIP 22K 0.5% 1/16W	
R105	1-218-883-11	METAL CHIP 33K 0.5% 1/16W	
R106	1-218-883-11	METAL CHIP 33K 0.5% 1/16W	
R110	1-218-736-11	METAL CHIP 68K 0.5% 1/16W	
R112	1-218-736-11	METAL CHIP 68K 0.5% 1/16W	
R113	1-218-270-11	METAL GLAZE 1.1K 5% 1/16W	
R114	1-216-845-11	METAL CHIP 100K 5% 1/16W	
R115	1-216-295-00	METAL CHIP 0 5% 1/10W	
R117	1-216-846-11	METAL CHIP 120K 5% 1/16W	
R118	1-216-813-11	METAL CHIP 220 5% 1/16W	
R121	1-216-836-11	METAL CHIP 18K 5% 1/16W	
R122	1-216-795-11	METAL GLAZE 6.8 5% 1/16W	
R124	1-216-833-11	METAL CHIP 10K 5% 1/16W	
R125	1-216-789-11	METAL CHIP 2.2 5% 1/16W	
R126	1-216-815-11	METAL CHIP 330 5% 1/16W	
R131	1-216-823-11	METAL CHIP 1.5K 5% 1/16W	
R132	1-216-823-11	METAL CHIP 1.5K 5% 1/16W	

Ref.No.	Part No.	Description			Remark
R201	1-216-834-11	METAL CHIP	12K	5%	1/16W
R202	1-216-834-11	METAL CHIP	12K	5%	1/16W
R203	1-218-724-11	METAL CHIP	22K	0.5%	1/16W
R204	1-218-724-11	METAL CHIP	22K	0.5%	1/16W
R205	1-218-883-11	METAL CHIP	33K	0.5%	1/16W
R206	1-218-883-11	METAL CHIP	33K	0.5%	1/16W
R210	1-218-736-11	METAL CHIP	68K	0.5%	1/16W
R212	1-218-736-11	METAL CHIP	68K	0.5%	1/16W
R213	1-218-270-11	METAL GLAZE	1.1K	5%	1/16W
R214	1-216-845-11	METAL CHIP	100K	5%	1/16W
R215	1-216-295-00	METAL CHIP	0	5%	1/10W
R217	1-216-846-11	METAL CHIP	120K	5%	1/16W
R218	1-216-813-11	METAL CHIP	220	5%	1/16W
R221	1-216-836-11	METAL CHIP	18K	5%	1/16W
R222	1-216-795-11	METAL GLAZE	6.8	5%	1/16W
R224	1-216-833-11	METAL CHIP	10K	5%	1/16W
R225	1-216-789-11	METAL CHIP	2.2	5%	1/16W
R226	1-216-815-11	METAL CHIP	330	5%	1/16W
R231	1-216-823-11	METAL CHIP	1.5K	5%	1/16W
R232	1-216-823-11	METAL CHIP	1.5K	5%	1/16W
R301	1-216-825-11	METAL CHIP	2.2K	5%	1/16W
R302	1-216-825-11	METAL CHIP	2.2K	5%	1/16W
R304	1-216-797-11	METAL CHIP	10	5%	1/16W
R314	1-216-833-11	METAL CHIP	10K	5%	1/16W
R315	1-216-821-11	METAL CHIP	1K	5%	1/16W
R316	1-216-825-11	METAL CHIP	2.2K	5%	1/16W
R317	1-216-845-11	METAL CHIP	100K	5%	1/16W
R318	1-216-821-11	METAL CHIP	1K	5%	1/16W
R321	1-216-295-00	METAL CHIP	0	5%	1/10W
R322	1-216-833-11	METAL CHIP	10K	5%	1/16W
R333	1-216-295-00	METAL CHIP	0	5%	1/10W (E)
R342	1-216-829-11	METAL CHIP	4.7K	5%	1/16W
R343	1-216-821-11	METAL CHIP	1K	5%	1/16W
R344	1-218-294-11	METAL GLAZE	30K	5%	1/16W
R345	1-216-852-11	METAL CHIP	390K	5%	1/16W
R346	1-216-841-11	METAL CHIP	47K	5%	1/16W
R352	1-216-864-11	METAL CHIP	0	5%	1/16W
R353	1-216-809-11	METAL CHIP	100	5%	1/16W
R401	1-216-864-11	METAL CHIP	0	5%	1/16W
R402	1-216-827-11	METAL CHIP	3.3K	5%	1/16W
R403	1-216-824-11	METAL CHIP	1.8K	5%	1/16W
R404	1-216-801-11	METAL CHIP	22	5%	1/16W
R405	1-218-344-11	METAL GLAZE	7.5K	5%	1/16W
R409	1-218-720-11	METAL CHIP	15K	0.5%	1/16W
R410	1-218-724-11	METAL CHIP	22K	0.5%	1/16W
R411	1-216-821-11	METAL CHIP	1K	5%	1/16W
R412	1-218-330-11	METAL CHIP	11K	0.5%	1/16W
R414	1-217-671-11	METAL CHIP	1	5%	1/10W
R415	1-217-671-11	METAL CHIP	1	5%	1/10W

Ref.No.	Part No.	Description			Remark
R417	1-216-019-00	METAL CHIP	56	5%	1/10W
R418	1-216-835-11	METAL CHIP	15K	5%	1/16W
R419	1-216-829-11	METAL CHIP	4.7K	5%	1/16W
R421	1-216-833-11	METAL CHIP	10K	5%	1/16W
R422	1-216-839-11	METAL CHIP	33K	5%	1/16W
R423	1-216-846-11	METAL CHIP	120K	5%	1/16W
R424	1-218-734-11	METAL CHIP	56K	0.5%	1/16W
R425	1-218-724-11	METAL CHIP	22K	0.5%	1/16W
R427	1-216-857-11	METAL CHIP	1M	5%	1/16W
R428	1-216-857-11	METAL CHIP	1M	5%	1/16W
R429	1-216-857-11	METAL CHIP	1M	5%	1/16W
R430	1-216-857-11	METAL CHIP	1M	5%	1/16W
R431	1-216-845-11	METAL CHIP	100K	5%	1/16W
R432	1-216-115-00	METAL CHIP	560K	5%	1/10W
R436	1-216-833-11	METAL CHIP	10K	5%	1/16W
R501	1-217-671-11	METAL CHIP	1	5%	1/10W
R502	1-216-994-11	METAL CHIP	13K	0.5%	1/16W
R503	1-218-290-11	METAL CHIP	6.2K	0.5%	1/16W
R504	1-216-832-11	METAL CHIP	8.2K	5%	1/16W
R505	1-216-857-11	METAL CHIP	1M	5%	1/16W
R506	1-216-841-11	METAL CHIP	47K	5%	1/16W
R507	1-216-839-11	METAL CHIP	33K	5%	1/16W
R508	1-216-843-11	METAL CHIP	68K	5%	1/16W
R509	1-218-332-11	METAL GLAZE	130K	5%	1/16W
R510	1-216-850-11	METAL CHIP	270K	5%	1/16W
R511	1-216-845-11	METAL CHIP	100K	5%	1/16W
R512	1-216-833-11	METAL CHIP	10K	5%	1/16W
R513	1-216-833-11	METAL CHIP	10K	5%	1/16W
R514	1-216-833-11	METAL CHIP	10K	5%	1/16W
R515	1-218-739-11	METAL CHIP	91K	0.5%	1/16W
R516	1-216-843-11	METAL CHIP	68K	5%	1/16W
R517	1-216-841-11	METAL CHIP	47K	5%	1/16W
R521	1-218-286-11	METAL GLAZE	91	5%	1/16W
R522	1-216-864-11	METAL CHIP	0	5%	1/16W
R524	1-216-864-11	METAL CHIP	0	5%	1/16W
R528	1-218-735-11	METAL CHIP	62K	0.5%	1/16W
R529	1-218-735-11	METAL CHIP	62K	0.5%	1/16W
R530	1-218-735-11	METAL CHIP	62K	0.5%	1/16W
R531	1-218-735-11	METAL CHIP	62K	0.5%	1/16W
R532	1-218-744-11	METAL CHIP	150K	0.5%	1/16W
R533	1-218-744-11	METAL CHIP	150K	0.5%	1/16W
R534	1-216-821-11	METAL CHIP	1K	5%	1/16W
R601	1-216-833-11	METAL CHIP	10K	5%	1/16W
R602	1-216-835-11	METAL CHIP	15K	5%	1/16W
R603	1-216-845-11	METAL CHIP	100K	5%	1/16W
R604	1-216-839-11	METAL CHIP	33K	5%	1/16W
R605	1-216-827-11	METAL CHIP	3.3K	5%	1/16W
R606	1-216-831-11	METAL CHIP	6.8K	5%	1/16W
R607	1-216-827-11	METAL CHIP	3.3K	5%	1/16W

MAIN

Ref.No.	Part No.	Description			Remark
R608	1-216-857-11	METAL CHIP	1M	5%	1/16W
R609	1-216-837-11	METAL CHIP	22K	5%	1/16W
R610	1-216-864-11	METAL CHIP	0	5%	1/16W
R612	1-216-809-11	METAL CHIP	100	5%	1/16W
R614	1-216-864-11	METAL CHIP	0	5%	1/16W
R615	1-218-740-11	METAL CHIP	100K	0.5%	1/16W
R616	1-216-864-11	METAL CHIP	0	5%	1/16W
R621	1-216-841-11	METAL CHIP	47K	5%	1/16W
R631	1-216-829-11	METAL CHIP	4.7K	5%	1/16W
R641	1-216-829-11	METAL CHIP	4.7K	5%	1/16W
R642	1-216-830-11	METAL CHIP	5.6K	5%	1/16W
R650	1-216-825-11	METAL CHIP	2.2K	5%	1/16W
R651	1-216-864-11	METAL CHIP	0	5%	1/16W
R652	1-218-740-11	METAL CHIP	100K	0.5%	1/16W
R653	1-216-864-11	METAL CHIP	0	5%	1/16W
R654	1-218-716-11	METAL CHIP	10K	0.5%	1/16W
R655	1-216-822-11	METAL CHIP	1.2K	5%	1/16W
R656	1-216-845-11	METAL CHIP	100K	5%	1/16W
R657	1-216-821-11	METAL CHIP	1K	5%	1/16W
R658	1-216-845-11	METAL CHIP	100K	5%	1/16W
R659	1-216-829-11	METAL CHIP	4.7K	5%	1/16W
R660	1-218-716-11	METAL CHIP	10K	0.5%	1/16W
R661	1-216-845-11	METAL CHIP	100K	5%	1/16W
R662	1-218-704-11	METAL CHIP	3.3K	0.5%	1/16W
R663	1-218-720-11	METAL CHIP	15K	0.5%	1/16W
R665	1-216-829-11	METAL CHIP	4.7K	5%	1/16W
R667	1-218-447-11	METAL GLAZE	62K	5%	1/16W
R669	1-216-864-11	METAL CHIP	0	5%	1/16W
R670	1-216-821-11	METAL CHIP	1K	5%	1/16W
R674	1-216-864-11	METAL CHIP	0	5%	1/16W
R675	1-216-864-11	METAL CHIP	0	5%	1/16W
R676	1-216-845-11	METAL CHIP	100K	5%	1/16W
R677	1-216-861-11	METAL CHIP	2.2M	5%	1/16W
R801	1-216-833-11	METAL CHIP	10K	5%	1/16W
R806	1-216-845-11	METAL CHIP	100K	5%	1/16W
R809	1-216-864-11	METAL CHIP	0	5%	1/16W
R810	1-216-824-11	METAL CHIP	1.8K	5%	1/16W
R811	1-218-716-11	METAL CHIP	10K	0.5%	1/16W
R812	1-216-820-11	METAL CHIP	820	5%	1/16W
R813	1-216-822-11	METAL CHIP	1.2K	5%	1/16W
R814	1-216-823-11	METAL CHIP	1.5K	5%	1/16W
R815	1-216-825-11	METAL CHIP	2.2K	5%	1/16W
R816	1-216-827-11	METAL CHIP	3.3K	5%	1/16W
R817	1-216-857-11	METAL CHIP	1M	5%	1/16W
R818	1-216-845-11	METAL CHIP	100K	5%	1/16W
R819	1-216-851-11	METAL CHIP	330K	5%	1/16W
R820	1-216-864-11	METAL CHIP	0	5%	1/16W
R821	1-216-837-11	METAL CHIP	22K	5%	1/16W
R822	1-216-837-11	METAL CHIP	22K	5%	1/16W
R823	1-216-837-11	METAL CHIP	22K	5%	1/16W
R824	1-216-829-11	METAL CHIP	4.7K	5%	1/16W
R825	1-216-857-11	METAL CHIP	1M	5%	1/16W
R826	1-216-857-11	METAL CHIP	1M	5%	1/16W
R827	1-216-864-11	METAL CHIP	0	5%	1/16W
R829	1-218-716-11	METAL CHIP	10K	0.5%	1/16W
R832	1-216-857-11	METAL CHIP	1M	5%	1/16W
R835	1-216-864-11	METAL CHIP	0	5%	1/16W
R836	1-216-854-11	METAL CHIP	560K	5%	1/16W
R837	1-216-857-11	METAL CHIP	1M	5%	1/16W
R838	1-216-864-11	METAL CHIP	0	5%	1/16W
R841	1-218-720-11	METAL CHIP	15K	0.5%	1/16W
R842	1-218-735-11	METAL CHIP	62K	0.5%	1/16W
R851	1-216-809-11	METAL CHIP	100	5%	1/16W
R852	1-216-809-11	METAL CHIP	100	5%	1/16W
R853	1-216-809-11	METAL CHIP	100	5%	1/16W
R854	1-216-809-11	METAL CHIP	100	5%	1/16W
R855	1-216-809-11	METAL CHIP	100	5%	1/16W

< VARIABLE RESISTOR >

RV650	1-241-393-21	RES, ADJ, METAL GLAZE 2.2K

< SWITCH >

S301	1-571-506-41	SWITCH, SLIDE (BASS BOOST)
S302	1-571-506-41	SWITCH, SLIDE (AVLS)
S401	1-692-532-21	SWITCH, PUSH (1 KEY) (BATTERY DETECT)
S801	1-571-275-31	SWITCH, SLIDE (HOLD)
S802	1-571-275-31	SWITCH, SLIDE (RESUME)
S810	1-572-572-11	SWITCH, MECH DRIVING DETECTION (OPEN)
S820	1-572-596-11	SWITCH, KEY BOARD (▶II)
S821	1-572-596-11	SWITCH, KEY BOARD (■)
S822	1-572-596-11	SWITCH, KEY BOARD (⏭)
S823	1-572-596-11	SWITCH, KEY BOARD (⏮)
S824	1-572-596-11	SWITCH, KEY BOARD (REPEAT/ENTER)
S825	1-572-596-11	SWITCH, KEY BOARD (PLAY MODE)

< TRANSFORMER >

T401	1-423-636-11	TRANSFORMER, DC-DC CONVERTER

< THERMISTOR >

TH601	1-810-236-11	THERMISTOR, POSITIVE 1.5K

< VARIABLE RESISTOR >

VR301	1-223-444-21	RES, VAR, CARBON 10K/10K (VOL ◢)

Ref.No.	Part No.	Description	Remark
		< VIBRATOR >	
X301	1-567-908-11	VIBRATOR, CRYSTAL (16.9MHz)	
X801	1-579-063-21	VIBRATOR, CERAMIC (4.19MHz)	

****

MISCELLANEOUS
****

⚠52	8-848-295-21	DEVICE, OPTICAL KSS-331C	
56	1-948-418-21	HARNESS	
M901	X-2625-485-1	MOTOR ASSY, T.T. SPINDLE	
M902	X-2625-171-2	MOTOR ASSY, SLED	
S910	1-570-771-11	SWITCH (LIMIT)	

****

ACCESSORIES & PACKING MATERIALS
****

⚠	1-467-008-11	ADAPTOR, AC (AC-E455)	(AEC,AEL)
⚠	1-467-009-11	ADAPTOR, AC (AC-E455)	(US,C&SA)
⚠	1-467-011-11	ADAPTOR, AC (AC-E455)	(E)
	1-528-444-11	BATTERY PACK (BP-DM10)	(E,C&SA)
	1-528-444-21	BATTERY PACK (BP-DM10)	(AEC,AEL)
	1-528-444-31	BATTERY PACK (BP-DM10)	(US)
	1-555-658-21	CORD, CONNECTION	
⚠	1-569-007-11	ADAPTER, CONVERSION 2P	(E)
	3-752-086-01	INSTRUCTION	
	3-757-210-11	MANUAL, INSTRUCTION (SPANISH)	(AEC,AEL,E,C&SA)
	3-757-210-21	MANUAL, INSTRUCTION (ENGLISH)	
	3-757-210-31	MANUAL, INSTRUCTION (FRENCH)	(AEC,AEL,E,C&SA)
	3-757-210-41	MANUAL, INSTRUCTION (DUTCH)	(AEC)
	3-757-210-51	MANUAL, INSTRUCTION (SWEDISH)	(AEC)
	3-757-210-61	MANUAL, INSTRUCTION (PORTUGUESE)	(AEC)
	3-757-210-71	MANUAL, INSTRUCTION (GERMAN)	(AEL)
	3-757-210-81	MANUAL, INSTRUCTION (ITALIAN)	(AEL)
*	4-957-230-01	CUSHION (UPPER)	
*	4-959-791-01	CUSHION (LOWER)	(US)
*	4-959-792-01	INDIVIDUAL CARTON	(US)
*	4-959-794-01	CUSHION (LOWER)	(AEC,AEL,E,C&SA)
*	4-959-795-01	INDIVIDUAL CARTON	(AEC,AEL,C&SA)
	4-960-143-01	CASE, CARRYING	(E)
*	4-960-707-01	INDIVIDUAL CARTON	(E)
	8-953-487-92	HEADPHONE MDR-14B/2 SET	(US)
	8-953-538-91	HEADPHONE MDR-E741//K1 SET	(AEC,AEL,E,C&SA)

****

****
HARDWARE LIST
****

Ref.No.	Part No.	Description	Remark
#1	7-627-852-18	SCREW,PRECISION +P 1.7X4 TYPE3	
#2	7-671-155-01	STEEL BALL 3.0	
#3	7-627-852-17	+P 1.7X4	
#4	7-685-104-19	SCREW (2X6), TAPPING (B)	
#5	7-685-105-19	SCREW (2X8), TAPPING (B)	

The components identified by mark ⚠ or dotted line with mark. ⚠ are critical for safety. Replace only with part number specified.

9-957-939-12

Sony Corporation
General Audio Group

English
93F1850-1
Printed in Japan

Published by Audio Sector Quality Assurance Dept.