D-232/235

SERVICE MANUAL

US Model
Canadian Model
AEP Model
UK Model
E Model
Australian Model
D-232
Tourist Model
D-235

Photo: D-235

Model Name Using Similar Mechanism		NEW
Optical Device Name	D-232	KSM-331CAN (S)
	D-235	KSM-331DAN (S)
Optical Pick-Up Name	D-232	KSS-331C
	D-235	KSS-331D

SPECIFICATIONS

System Compact disc digital audio system

Laser diode properties Material: GaAlAs
Wavelength: λ =780 nm
Emission duration: Continuous
Laser output: Less than 44.6 µW
(This output is the value measured at a distance of 200 mm from the objective lens surface on the Optical Pick-up Block.)

Error correction Sony Super Strategy Cross Interleave Reed Solomon Code

D-A conversion 1-bit quartz time-axis control

Frequency response 20 – 20,000 Hz $\pm\frac{1}{2}$ dB
(measured by EIAJ CP-307)

Output (at 4.5 V input level) Line output (stereo minijack)
Output level 0.7 V rms at 47 kilohms
Recommended load impedance over 10 kilohms
Headphones (stereo minijack)
12 mW + 12 mW at 16 ohms

General

Power requirements Supplied:
- Rechargeable battery
- DC IN 4.5 V jack accepts the Sony AC power adaptor for use on:

Where purchased	Operating voltage
European and Asian countries	220 – 230 V AC, 50 Hz
U.S.A., Canada, Central and South America	120 V AC, 60 Hz
Middle East	110 – 240 V AC, 50/60 Hz
United Kingdom, Australia	240 V AC, 50 Hz
Other countries	100 – 240 V AC, 50/60 Hz

Not supplied:
- DC 3 V, two size AA (LR6) alkaline batteries
- DC IN 4.5 V accepts the Sony CPM-300PK mount arm for use on car battery

Dimensions Approx. 130 × 30.5 × 142 mm ($5\frac{1}{8} \times 1\frac{1}{4} \times 5\frac{5}{8}$ in.) (w/h/d) incl. projecting parts and controls

Mass Approx. 255 g (9.0 oz) not incl. rechargeable battery

Supplied accessories AC power adaptor (1)
Rechargeable battery (1)
Connecting cord (phono plug × 2 ↔ stereo miniplug) (1)
Stereo headphones with remote commander (1)

Design and specifications are subject to change without notice.

使用時は添付資料も参照のこと
Refer to the additional documents.

COMPACT DISC COMPACT PLAYER

SONY®

TABLE OF CONTENTS

This Compact Disc player is classified as a CLASS 1 LASER product.
The CLASS 1 LASER PRODUCT label is located on the bottom exterior.

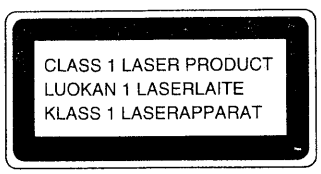

CAUTION

Use of controls or adjustments or performance of procedures other than those specified herein may result in hazardous radiation exposure.

SAFETY-RELATED COMPONENT WARNING!!

COMPONENTS IDENTIFIED BY MARK ⚠ OR DOTTED LINE WITH MARK ⚠ ON THE SCHEMATIC DIAGRAMS AND IN THE PARTS LIST ARE CRITICAL TO SAFE OPERATION. REPLACE THESE COMPONENTS WITH SONY PARTS WHOSE PART NUMBERS APPEAR AS SHOWN IN THIS MANUAL OR IN SUPPLEMENTS PUBLISHED BY SONY.

Flexible Circuit Board Repairing

- Keep the temperature of the soldering iron around 270 ℃ during repairing.
- Do not touch the soldering iron on the same conductor of the circuit board (within 3 times).
- Be careful not to apply force on the conductor when soldering or unsoldering.

Notes on chip component replacement

- Never reuse a disconnected chip component.
- Notice that the minus side of a tantalum capacitor may be damaged by heat.

ATTENTION AU COMPOSANT AYANT RAPPORT À LA SÉCURITÉ!

LES COMPOSANTS IDENTIFIÉS PAR UNE MARQUE ⚠ SUR LES DIAGRAMMES SCHÉMATIQUES ET LA LISTE DES PIÈCES SONT CRITIQUES POUR LA SÉCURITÉ DE FONCTIONNEMENT. NE REMPLACER CES COMPOSANTS QUE PAR DES PIÈCES SONY DONT LES NUMÉROS SONT DONNÉS DANS CE MANUEL OU DANS LES SUPPLÉMENTS PUBLIÉS PAR SONY.

SECTION 1 GENERAL

This section is extracted from instruction manual.

Location and Function of Controls

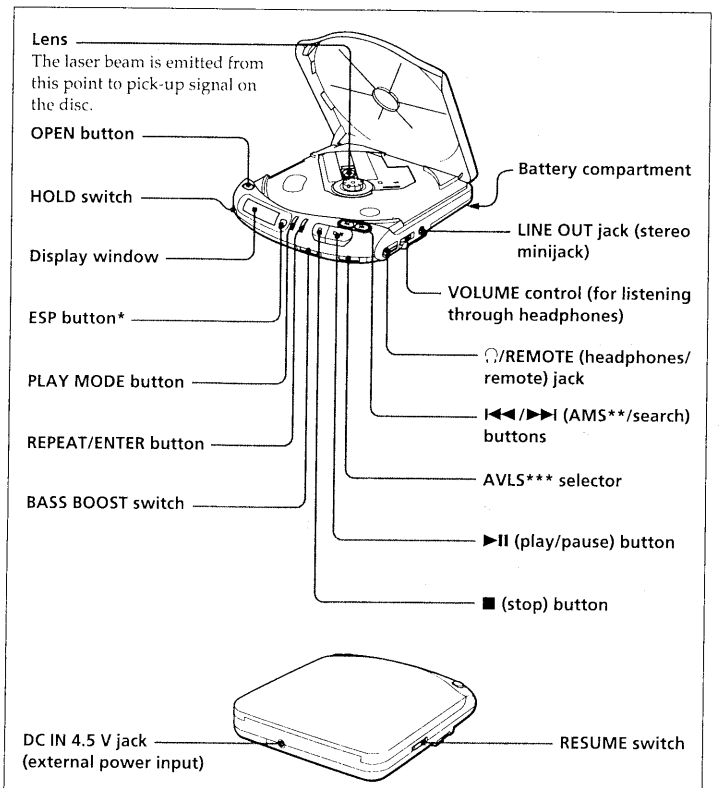

* ESP: Electronic Shock Protection
** AMS: Automatic Music Sensor
*** AVLS: Automatic Volume Limiter System

Headphones with Remote Commander

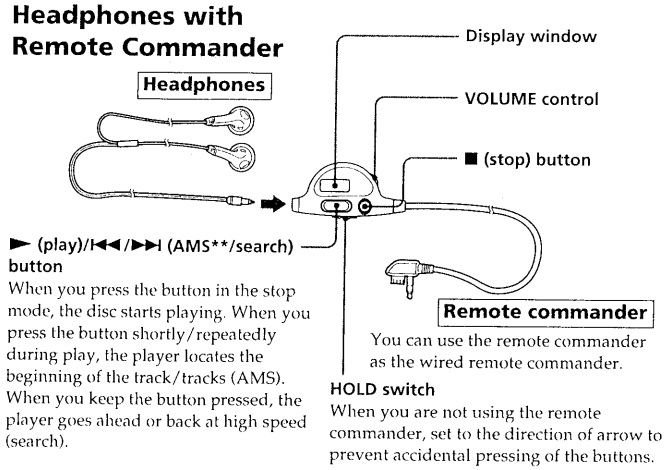

▶ (play)/⏮/⏭ (AMS/search) button**
When you press the button in the stop mode, the disc starts playing. When you press the button shortly/repeatedly during play, the player locates the beginning of the track/tracks (AMS). When you keep the button pressed, the player goes ahead or back at high speed (search).

You can use the remote commander as the wired remote commander.

HOLD switch
When you are not using the remote commander, set to the direction of arrow to prevent accidental pressing of the buttons.

Display Window

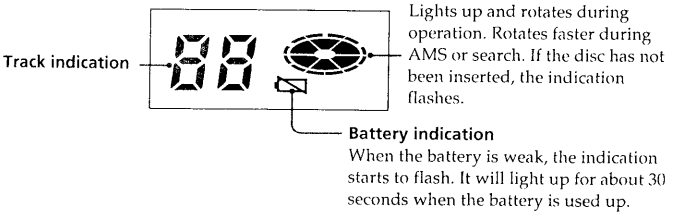

Operation indication
Lights up and rotates during operation. Rotates faster during AMS or search. If the disc has not been inserted, the indication flashes.

Battery indication
When the battery is weak, the indication starts to flash. It will light up for about 30 seconds when the battery is used up.

SECTION 2 SERVICE NOTE

NOTES ON HANDLING THE OPTICAL PICK-UP BLOCK OR BASE UNIT

The laser diode in the optical pick-up block may suffer electrostatic breakdown because of the potential difference generated by the charged electrostatic load, etc. on clothing and the human body.
During repair, pay attention to electrostatic breakdown and also use the procedure in the printed matter which is included in the repair parts.
The flexible board is easily damaged and should be handled with care.

NOTES ON LASER DIODE EMISSION CHECK

The laser beam on this model is concentrated so as to be focused on the disc reflective surface by the objective lens in the optical pick-up block. Therefore, when checking the laser diode emission, observe from more than 30 cm away from the objective lens.

Before Replacing the Optical Pick-Up Block

Please be sure to check thoroughly the parameters as par the "Optical Pick-Up Block Checking Procedures" (Part No.: 9-960-027-11) issued separately before replacing the optical pick-up block.
Note and specifications required to check are given below.

- FOK output: IC501 ⑫ pin
  When checking FOK, remove the lead wire to disc motor.
- S curve P-to-P value: 2.5 Vp-p
  When checking S curve P-to-P value, remove the lead wire to disc motor.
- Adjusted part for focus gain adjustment: RV503
- RF signal P-to-P value: 0.7 – 1.1 Vp-p
- Traverse signal P-to-P value: 1.2 – 2.0 Vp-p
- The repairing grating holder is impossible.
- Adjusted part for tracking gain adjustment: RV504

SECTION 3
SERVICE MODE

Precautions for Checking Emission of Laser Diode

Laser light of the equipment is focused by the object lens in the optical pick-up so that the light focuses on the reflection surface of the disc. Therefore, be sure to keep your eyes more then 30 cm apart from the object lens when you check the emission of laser diode.

Laser Diode Checking Methods

During normal operation of the equipment, emission of the laser diode is prohibited unless the upper panel is closed while turning ON the S810 (push switch type).
The following two checking methods for the laser diode are operable.

- **Method-1 (In the service mode or normal operation): Emission of the laser diode is visually checked.**

1. Open the upper panel.
2. Push the S810 as shown in Fig. 1.
3. Check the object lens for confirming normal emission of the laser diode. If not emitting, there is a trouble in the automatic power control circuit or the optical pick-up.
   During normal operation, the laser diode is turned ON about 2.5 seconds for focus searching.

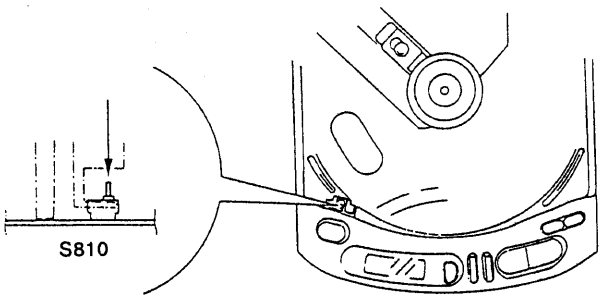

Fig. 1 Method to push the S810

- **Method-2 (In service mode or normal operation): Check the value of current flowing in the laser diode.**

1. Remove the upper panel.
2. Read the current printed on the label attached on the rear side of the optical pick-up.

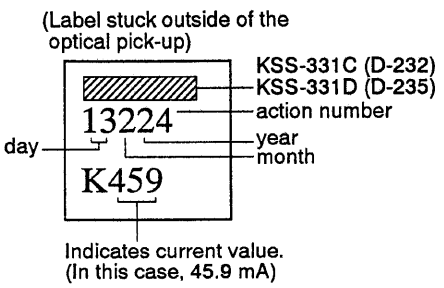

3. Connect a VTVM as shown in Fig. 2.
4. Press the ▶II key.
5. Calculate current value by the reading of the VTVM.
   Reading of the tester (V) ÷ 1=current value (A)
   (Example) Reading of the VTVM of 0.046 V:
   0.046 V ÷ 1 Ω =0.046 (A) = 46 mA
6. Check that the current value is within the following range.
   - Current value of the label $^{+5}_{-11}$ mA (25 ℃)
     Variation by temperature: 0.4 mA/℃
     Current increases with temperature increased.
     Current decreases with temperature decreased.

   If the current is more than the range above, there is a trouble in the automatic power control circuit or the laser diode is in deterioration.
   If less than the range, a trouble exists in the automatic power control circuit or the optical pick-up.

– MAIN BOARD – (Side A)

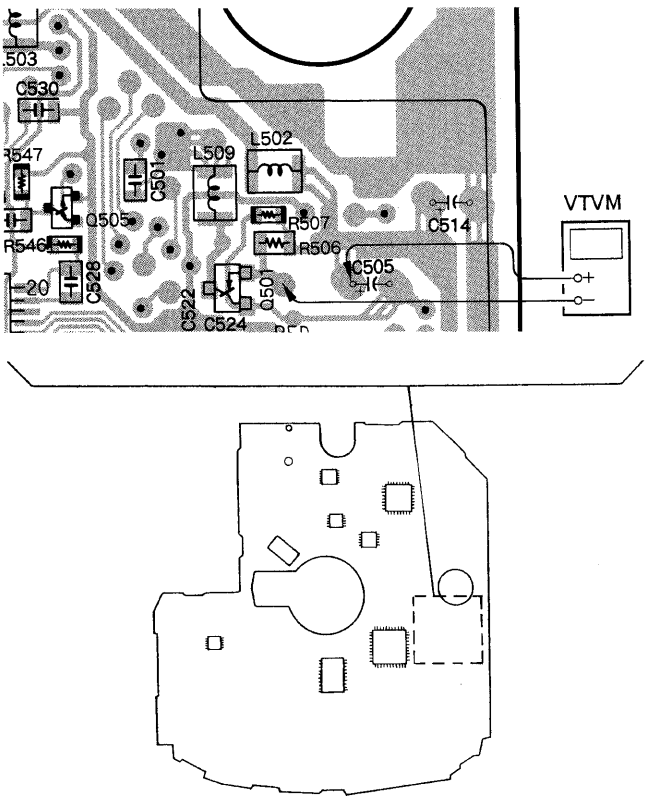

Fig. 2 VTVM connecting location

Service Mode (Service program)

The equipment is provided with a service program built in the microcomputer, like conventional models.
Service program operation methods are described in the following.

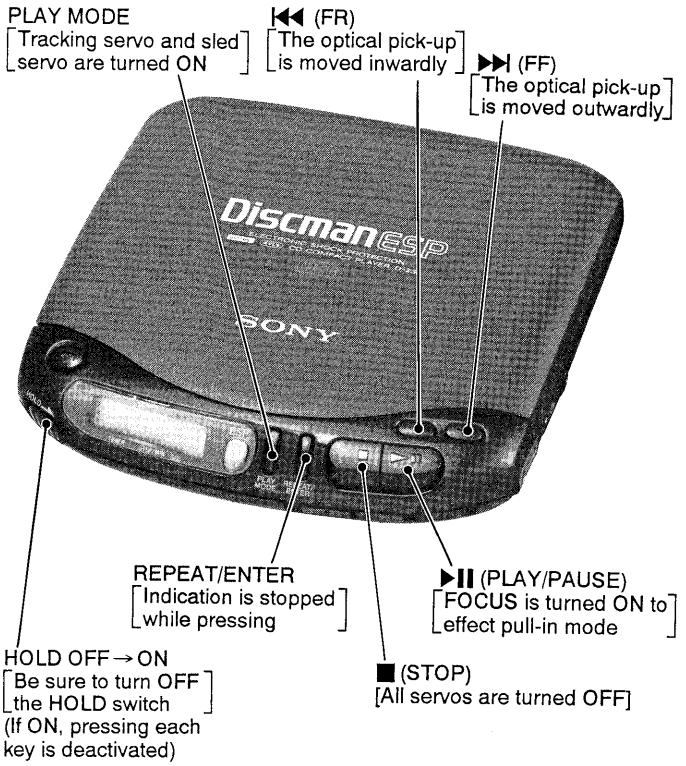

Descriptions in [ ] indicate major operations in the service mode. For more information, see Step 2.

Fig. 3 Layout of each key

- **Step 1 (Service mode setting methods)**

1. Turn OFF the HOLD switch with external power supply disconnected (power is not applied to the set).
2. Solder across the TEST terminals (pin ㉞ , IC801 (TEST) is grounded).
3. Connect an external power supply.

   Thus, the set is switched to the service mode.

- **Step 2 (Operation in the service mode)**

1. Once the service mode is effected, the LCD displays 5 indications each of which is repeatedly displayed.
   However, the following operations can be activated even if LCD indication is effected.
2. By pressing the ⏭ or ⏮ key, the optical pick-up is movable inwardly or outwardly. However, if this is activated, tracking servo and sled servo are turned OFF, so it can be turned ON by pressing the PLAY MODE key if required.
3. By pressing the REPEAT/ENTER key, the display stops.
   With the key released, repeated indication is continued, so you can check each segment.
4. By pressing the ▶II key, focus is turned ON from focus searching while entering CLV-S (pull-in mode).
   Without disc, focus searching is repeated continuously.
5. By pressing the PLAY MODE key, tracking servo, sled servo and CLV-A (servo in PLAY) are turned ON.
6. When 4. and 5. are performed, playing begins. No muting is ON in the service mode.
7. By pressing the ■ key, all servos (focus, tracking and sled) are turned OFF. However, the disc motor revolves for a while by inertia.

- **Step 3 (Resetting of service mode)**

1. Be sure to disconnect the external power supply and remove the solder bridge at the TEST terminals connected before in setting.
2. The set thus becomes available for normal operation.

– MAIN BOARD – (Side A)

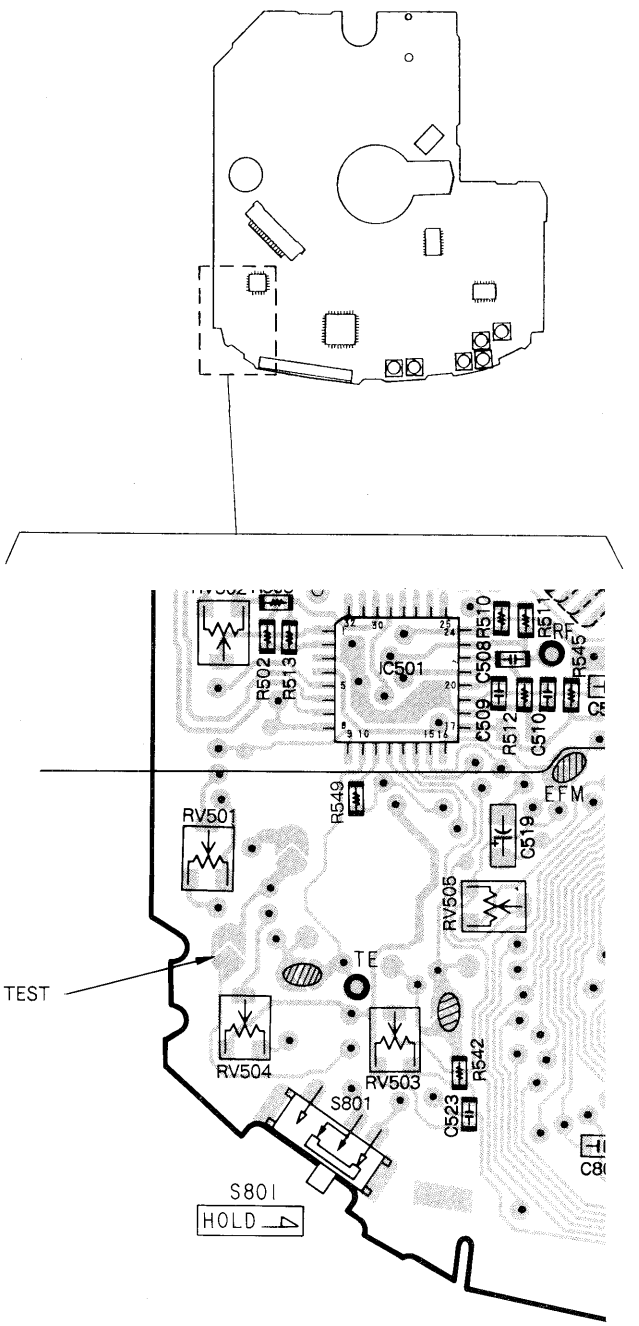

Fig. 4 Location of Test terminal

SECTION 4
ELECTRICAL ADJUSTMENTS

CD SECTION

Precautions for Adjustment

1. Before beginning adjustment, set the equipment to service mode.
   After the completion of adjustment, be sure to reset the service mode.
   For more information, see "Service Mode (service program)" on pages 5.
2. Perform adjustments in the order given.
3. Use YEDS-18 disc (Part No.: 3-702-101-01) unless otherwise indicated.
4. Power supply voltage requirement.: DC4.5 V
   HOLD switch : OFF
   VOLUME switch : Minimum
   ESP switch : OFF
   BASS BOOST switch : NORM
   AVLS switch : OFF

Before Beginning Adjustment

Set the equipment to service mode (See page 5) and check the following. If there is an error, repair the equipment.

• Checking of the sled motor

1. Open the upper panel.
2. Press the ▶▶| and |◀◀ keys and check that the optical pick-up can move smoothly without sluggishness or abnormal noise in innermost periphery → outermost periphery → innermost periphery.
   ▶▶| : The optical pick-up moves outwardly.
   |◀◀ : The optical pick-up moves inwardly.

• Checking of focus searching

1. Open the upper panel.
2. Press the ▶II key. (Focus searching operation is activated continuously.)
3. Check the object lens of the optical pick-up for smooth up/down motion without sluggishness or abnormal noise.
4. Press the ■ key.
   Check that focus searching operation is deactivated. If not, again press the ■ key slightly longer.

• VC (1/2 Vcc) connection location

Focus bias adjustment
Tracking balance adjustment
For any of the adjustments above, connect the minus side of the oscilloscope at the point of the following view.

Connection Location:

– MAIN BOARD – (Side A)

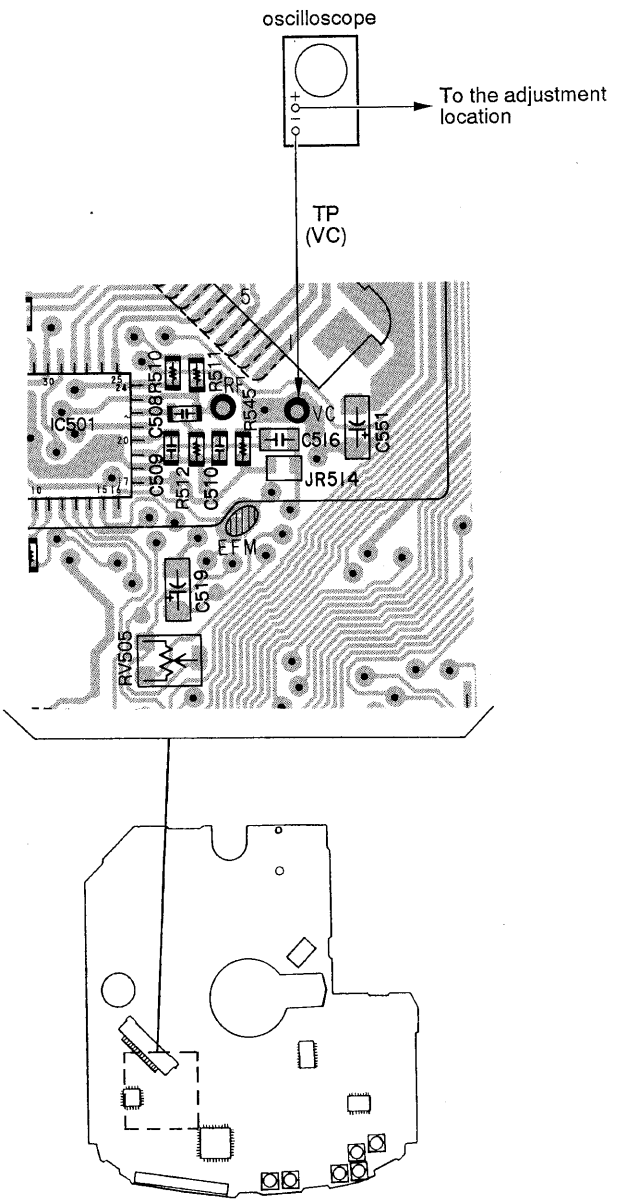

VDD Adjustment

Adjustment Procedure:

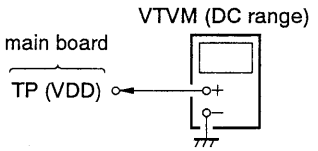

1. Set the equipment to service mode stop state. (See page 5.)
2. Connect the VTVM to TP (VDD) of the main board.
3. Adjust RV401 on the main board so that the reading on VTVM goes 3.15 ± 0.05 V.
4. After the completion of adjustment, reset service mode. (See page 5.)

Adjustment Location: Main Board

PLL Free Run Frequency Checking and Adjustment

Checking and Adjustment Procedure:

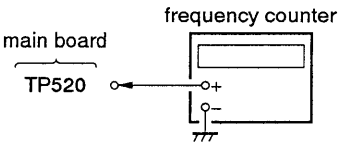

1. Unsolder the solder-bridge on Ⓐ (EFM) as shown in Adjusting Parts Location. (See page 9.)
2. Connect the frequency counter to the test point TP520 of the main board.
3. Set the equipment to service mode stop state. (See page 5.)
4. Confirm the reading on the frequency counter is 4.3518 ± 0.01 MHz. When it is out of order, Adjust RV505 to 4.3518 ± 0.01 MHz.
5. After the completion of adjustment, reset service mode. (See page 5.)
6. Short-circuit Ⓐ (EFM).

Checking and Adjustment Location: Main Board

Tracking Balance Adjustment

Condition:

- Hold the set in horizontal state.

Adjustment Procedure:

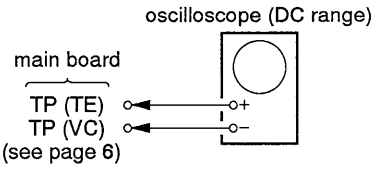

1. Connect the oscilloscope to TP (TE) of the main board.
2. Set the equipment to service mode stop state. (See page 5.)
3. Move the optical pick-up by pressing the ▶▶| and |◀◀ keys.
4. Put the disc (YEDS-18).
5. Press the ▶II key.
   [From focus searching, focus is turned ON while entering CLV drawing-in mode. Tracking and sled are turned OFF.]
6. Adjust RV502 so that the waveform on the oscilloscope becomes up/down symmetrical with an axis of 0 V.

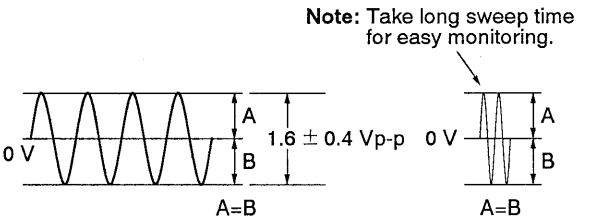

7. Stop removing of the disc motor by pressing the ■ key.
8. After the completion of adjustment, reset service mode. (See page 5.)

Adjustment Location: Main Board

Focus Bias Adjustment

Condition:

- Hold the set in horizontal state.

Adjustment Procedure:

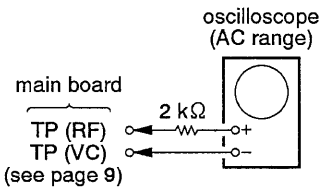

1. Set the equipment to service mode stop state. (See page 5.)
2. Connect the oscilloscope to the test point TP (RF) of the main board.
3. Move the optical pick-up by pressing the ▶▶| and |◀◀ keys.
4. Put the disc (YEDS-18).
5. Put the ▶II key.
   [From focus searching, focus is turned ON while entering CLV drawing-in mode. Tracking and sled are turned OFF.]
6. Press the PLAY MODE key. (Both tracking and sled are turned ON.)
7. Adjust RV501 so that the eye pattern in the waveform of the oscilloscope is clealy displayed. "Clear display of the eye pattern" means that the ◇ shape can be clearly discriminated at the center of the waveform.

RF SIGNAL REFERENCE WAVEFORM (EYE PATTERN)

VOLT DIV : 200 mV (With the 10:1 probe in use)
TIME DIV : 500 ns

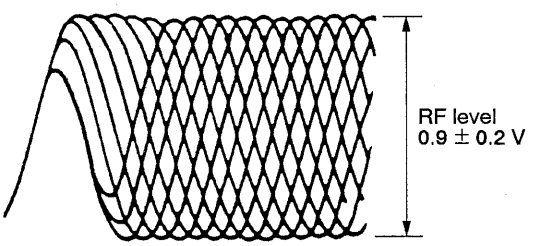

To watch the eye pattern, set the oscilloscope to AC range and increase the vertical sensitivity of the oscilloscope for easy watching.

8. Stop revolving of the disc motor by pressing the ■ key.
9. After the completion of adjustment, reset service mode. (See page 5.)

Adjustment Location: Main Board

Adjusting Parts Location

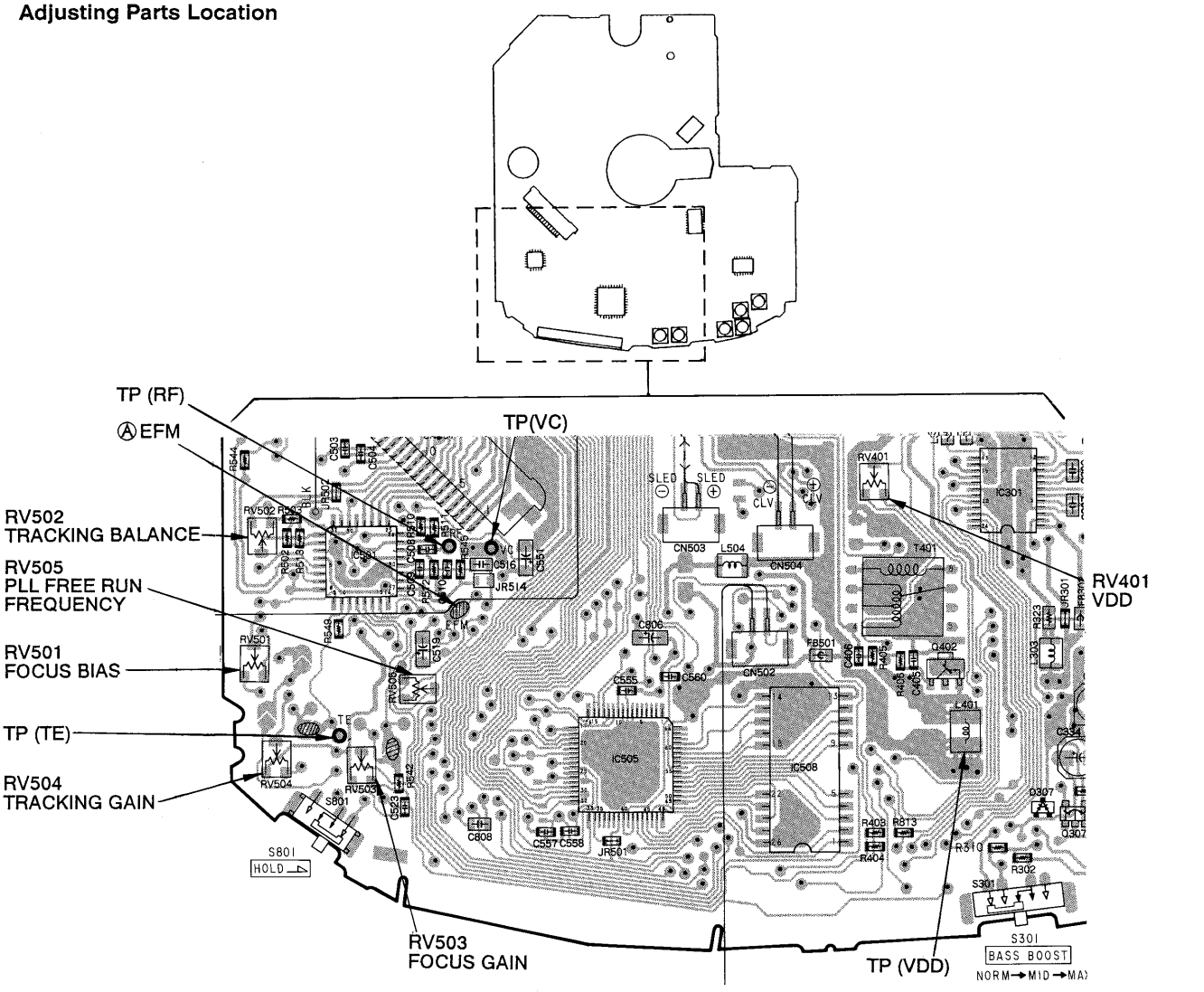

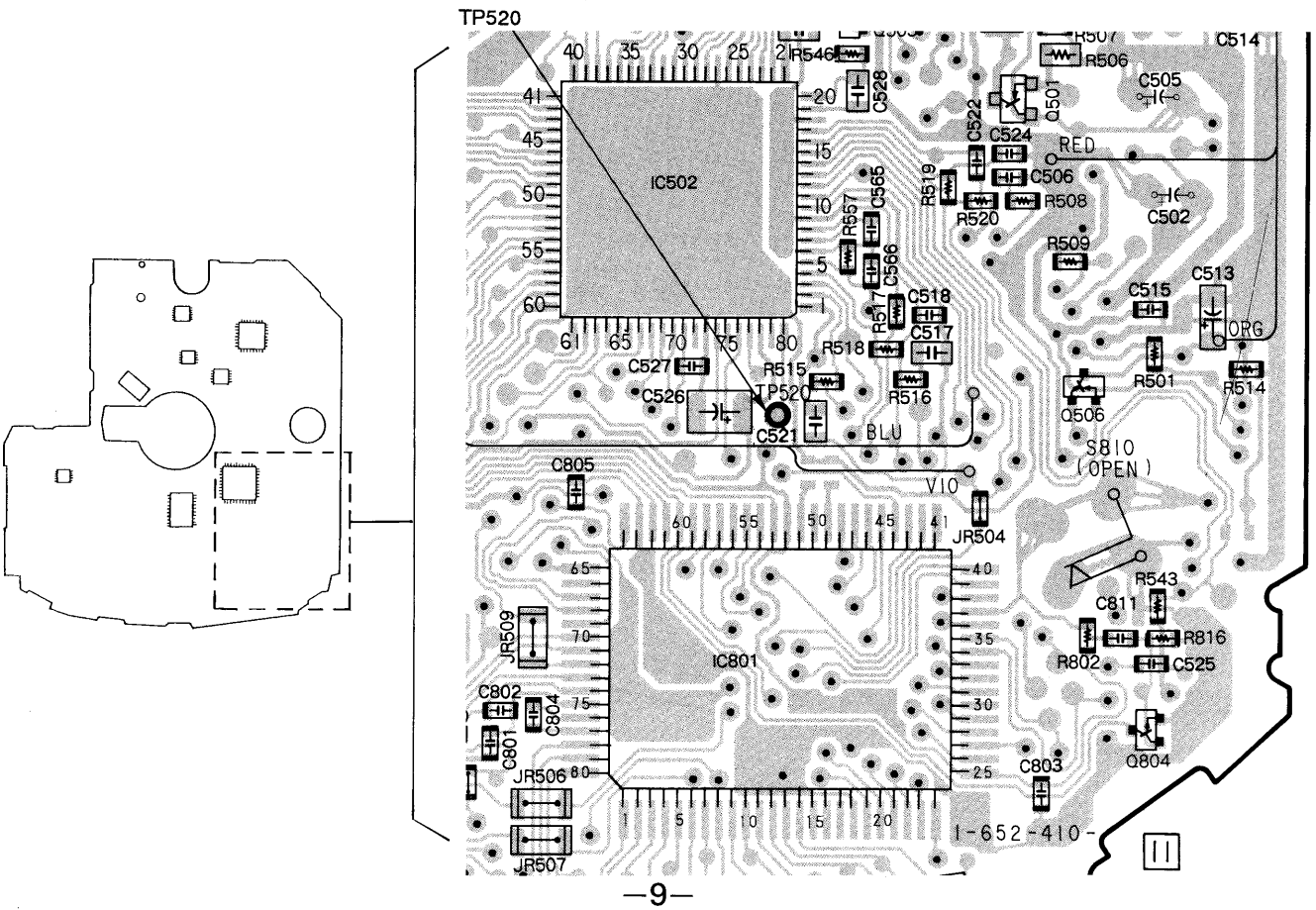

Focus/Tracking Gain Adjustment

To perform this adjustment precisely, a servo analyser or CD jigs are required.

However, there is an allowance for this gain, so substantially no problems occur normally even if it is slightly deviated. Therefore, you need not perform this adjustment.

Focus/tracking gain determines the follow-up property of the pick-up to mechanical shocks during 2-axis device operation. However, since these requirements are inconsistent, the equipment is adjusted to compromise both properties.

- With gain increased, noise in 2-axis device operation also increases.
- With gain decreased, the equipment becomes less immune to mechanical shocks, where sound jumping often occurs.

This adjustment has to be performed upon replacing any of the following parts.

- Optical pick-up
- RV503 (Focus gain VR)
- RV504 (Tracking gain VR)

Normally, be sure not to move RV503 (focus gain VR) and RV504 (tracking gain VR).

With this equipment, it is very difficult to simply perform this adjustment.
If the equipment is not so often suffering from "occasional sound jumping" or not easily decided for complete repairing, use the CD jigs for the adjustment. To connect the CD jigs, see the right view. For more detailed adjustment methouds, see the separate CD jig operation manual.

CD jig connecting methods:
Unsolder two lands and connect the equipment to the CD jigs as shown in the right view. At the time, connect the IC501 side and each VR side to the output to the CD jigs and the input from the CD jigs, respectively.

Connection and Adjustment Location: Main Board

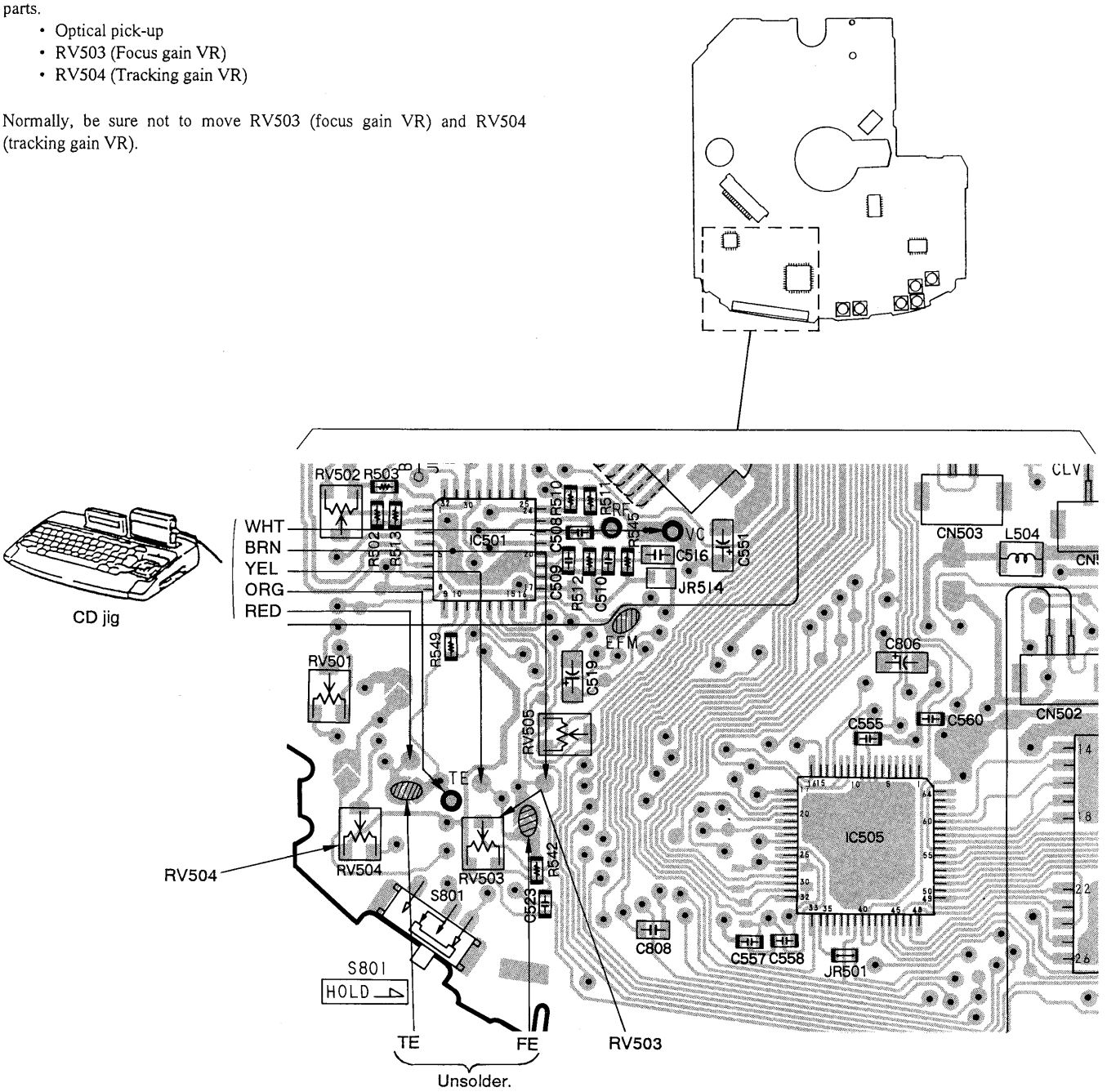

SECTION 5
DIAGRAMS

5-1. BLOCK DIAGRAM

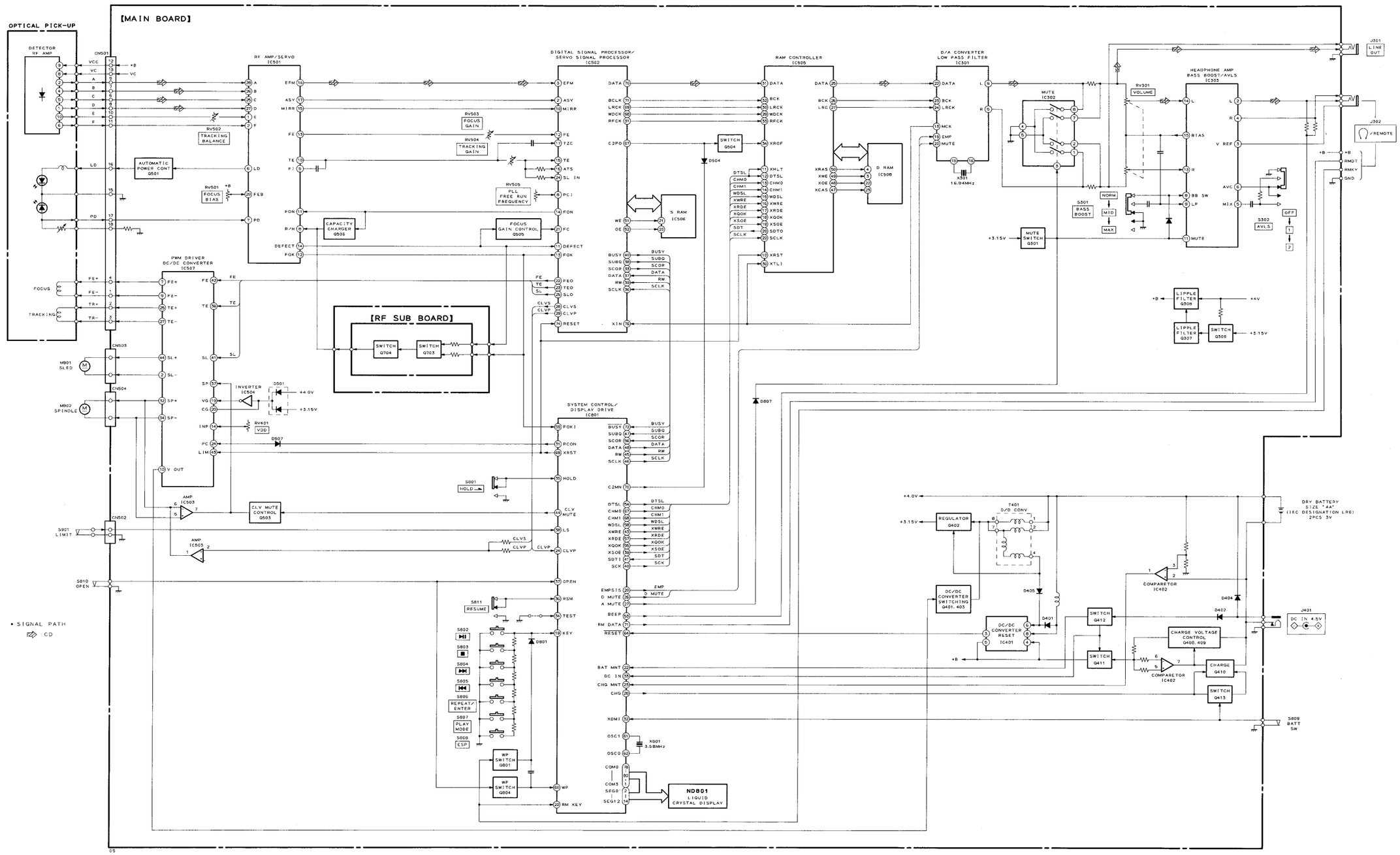

5-2. PRINTED WIRING BOARDS

• Semiconductor Lead Layouts

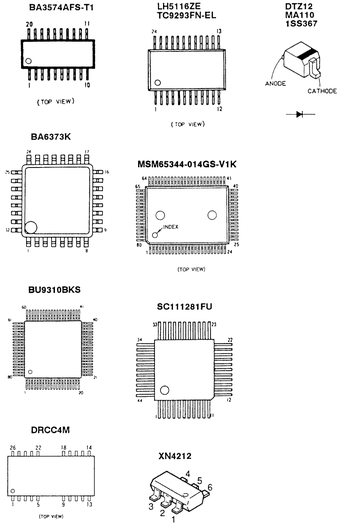

• Semiconductor Location

Ref. No.	Location
D101	G-10
D201	G-10
D301	F-10
D303	G-10
D307	H-9
D308	G-10
D309	F-9
D310	G-10
D401	D-16
D402	B-15
D403	D-15
D404	B-15
D405	D-16
D501	B-17
D502	B-17
D503	B-17
D504	H-16
D506	B-17
D507	C-17
D508	E-17
D509	G-16
D701	B-12
D801	H-16
D802	H-16
D803	H-14
IC301	F-9
IC302	F-13
IC303	G-10
IC401	D-16
IC402	C-16
IC501	G-5
IC502	F-17
IC503	D-17
IC504	B-17
IC505	H-6
IC506	F-16
IC507	C-18
IC508	H-7
IC801	H-17
Q301	F-10
Q307	H-9
Q308	H-14
Q309	H-15
Q401	G-15
Q402	G-8
Q403	G-15
Q408	C-15
Q409	C-15
Q410	D-15
Q411	C-16
Q412	C-16
Q413	D-15
Q501	F-18
Q503	D-18
Q504	H-16
Q505	F-18
Q506	G-18
Q703	B-12
Q704	B-11
Q801	H-16
Q804	H-19

Note:
- ○—— : parts extracted from the component side.
- ● : Through hole.
- △ : internal component.

【MAIN BOARD】 (SIDE A)

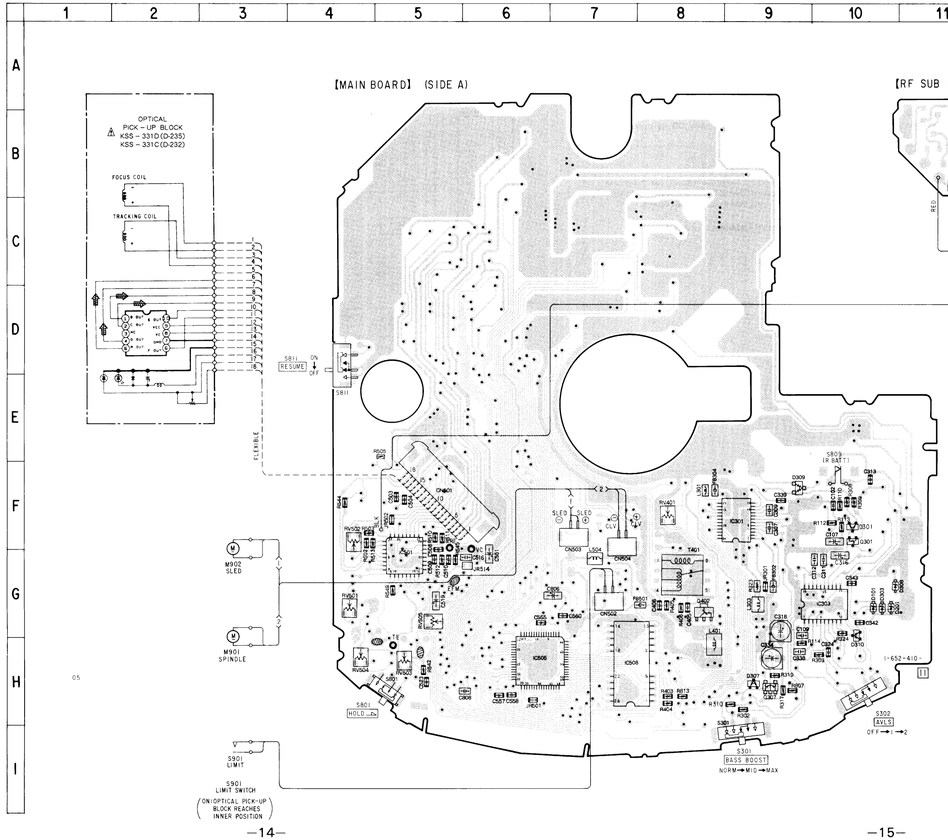

【RF SUB BOARD】

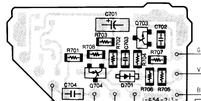

【MAIN BOARD】 (SIDE B)

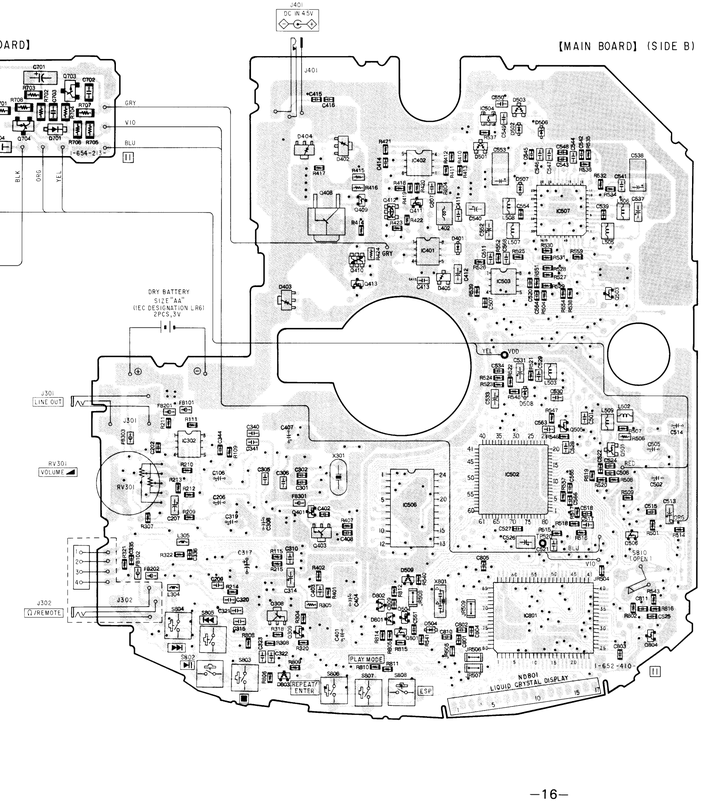

5-3. SCHEMATIC DIAGRAM • See page 21 for Waveforms and pages 22 to 24 for IC Block Diagrams.

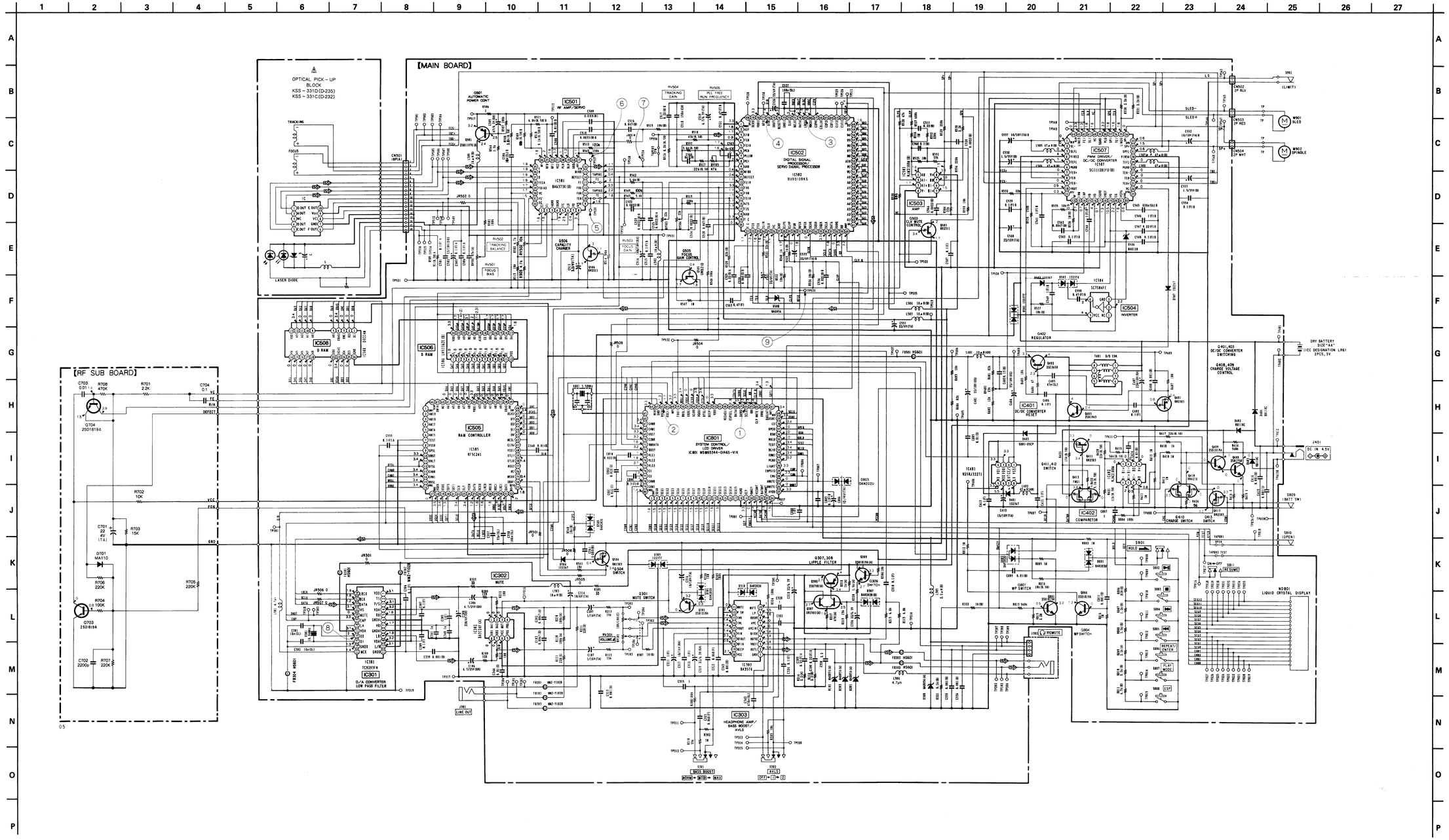

Note:

- All capacitors are in μF unless otherwise noted. pF: μμF 50 WV or less are not indicated except for electrolytics and tantalums.
- All resistors are in Ω and ¼ W or less unless otherwise specified.
- △ : internal component.

Note:	Note:
The components identified by mark ⚠ or dotted line with mark ⚠ are critical for safety. Replace only with part number specified.	Les composants identifiés par une marque ⚠ sont critiques pour la sécurité. Ne les remplacer que par une pièce portant le numéro spécifié.

- ▬ : B + Line.
- ☐ : panel designation.
- ☐ : adjustment for repair.
- Power voltage is dc 4.5 V and fed with regulated dc power supply from external power voltage jack.
- Voltages and waveforms are dc with respect to ground under playing back conditions in service mode.
- Voltages are taken with a VOM (10 MΩ/V).
  Voltage variations may be noted due to normal production tolerances.
- Waveforms are taken with a oscilloscope.
  Voltage variations may be noted due to normal production tolerances.
- Circled numbers refer to waveforms.
- Signal path.
  ⇨ : CD

• **Wave forms**

❶ IC801 ㊻ 2V/DIV
5ms/DIV

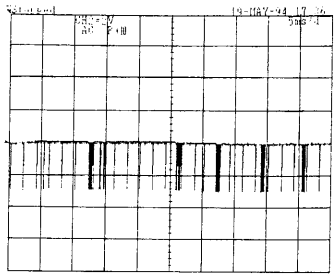

❷ IC801 ㊷

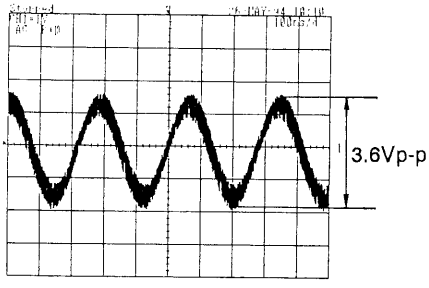

3.58MHz

❸ IC502 ㊾

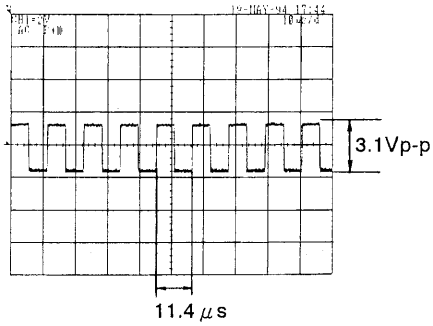

❹ IC502 ㊻

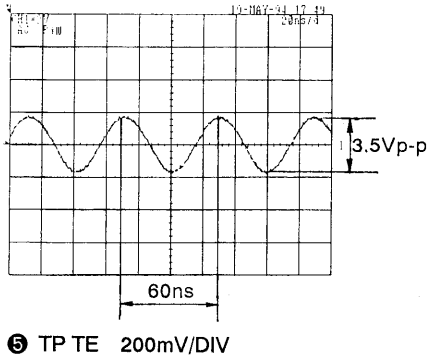

❺ TP TE 200mV/DIV
1ms/DIV

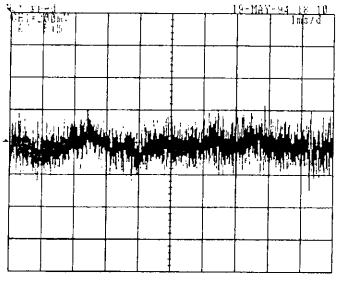

❻ TP FE 100mV/DIV
20ns/DIV

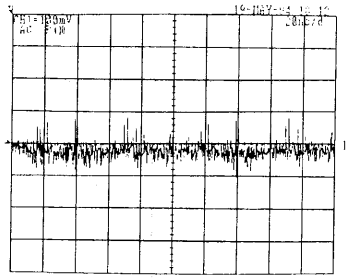

❼ IC501 ㊱ 500mV/DIV
2 μs/DIV

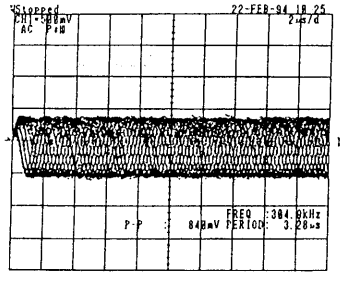

❽ IC301 ㊱

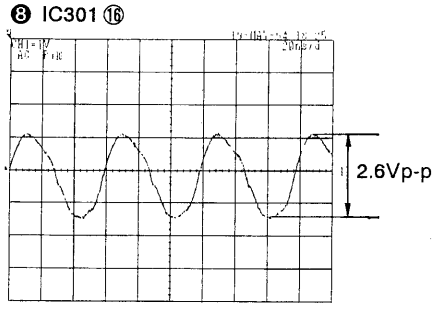

16.94MHz

❾ IC502 ㉛

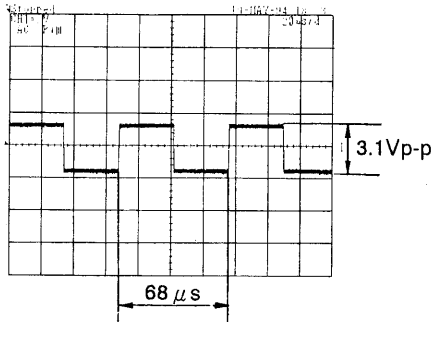

• **IC Block Diagrams**

MAIN BOARD

IC301 TC9293FN-EL

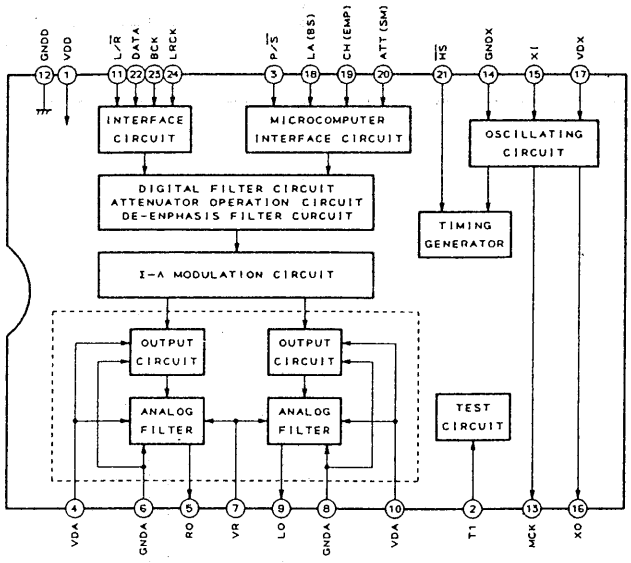

IC401 RS5RJ32271-T1

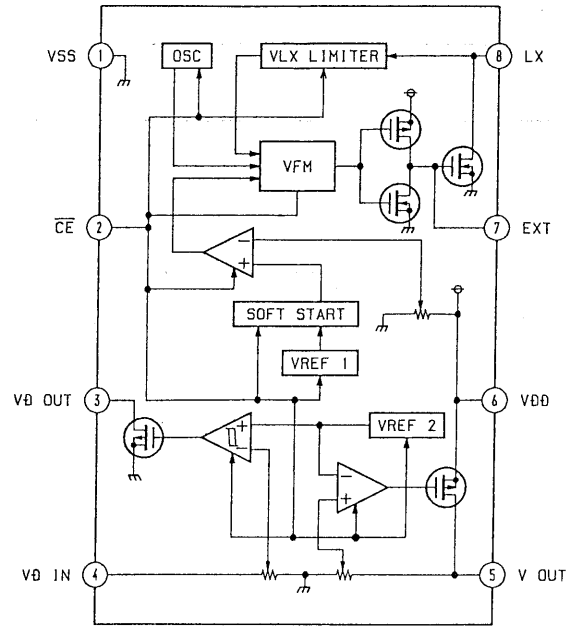

IC303 BA3574AFS-T1

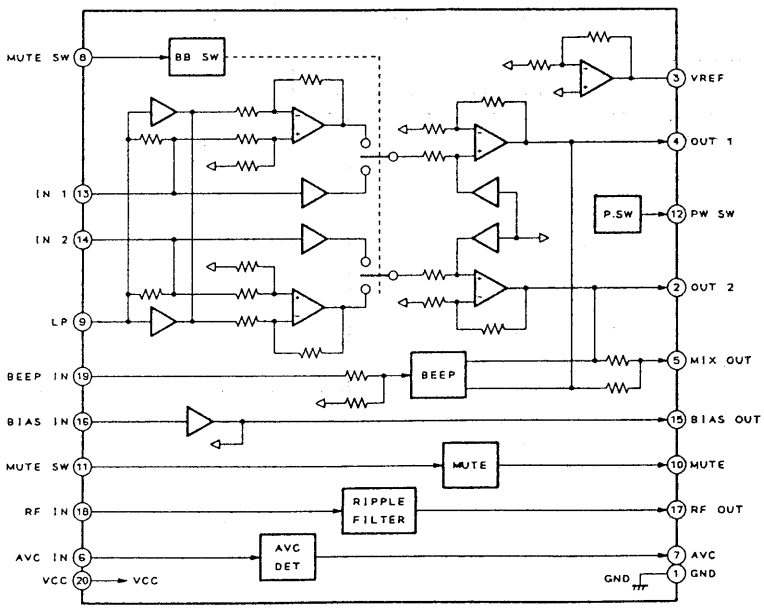

IC402, 503 NJM2100M

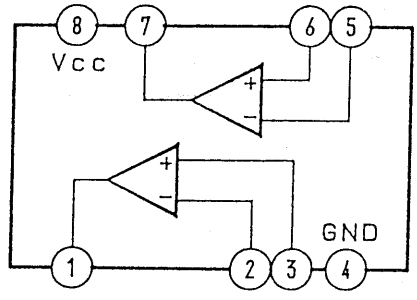

IC302 BA3124F-T1

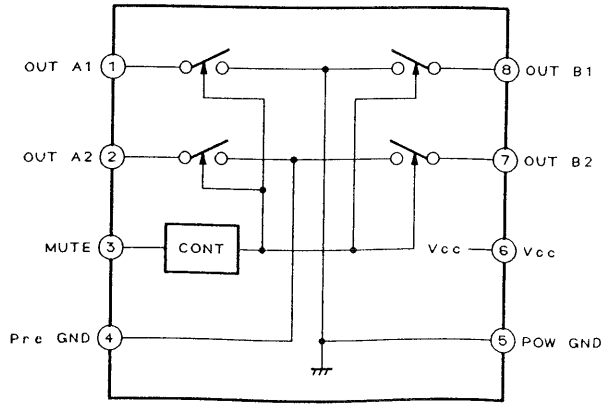

IC501 BA6373K

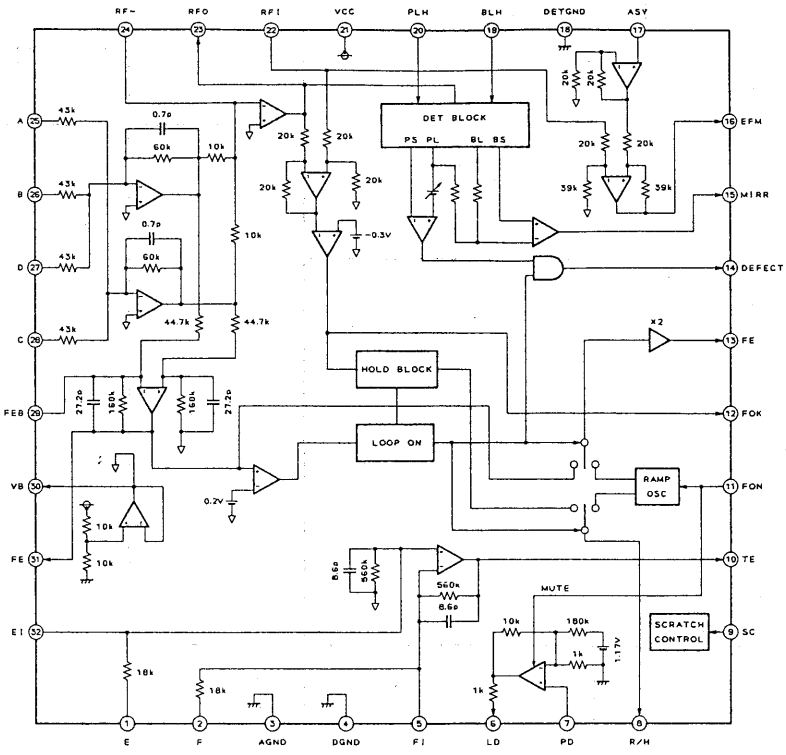

IC502 BU9310BKS

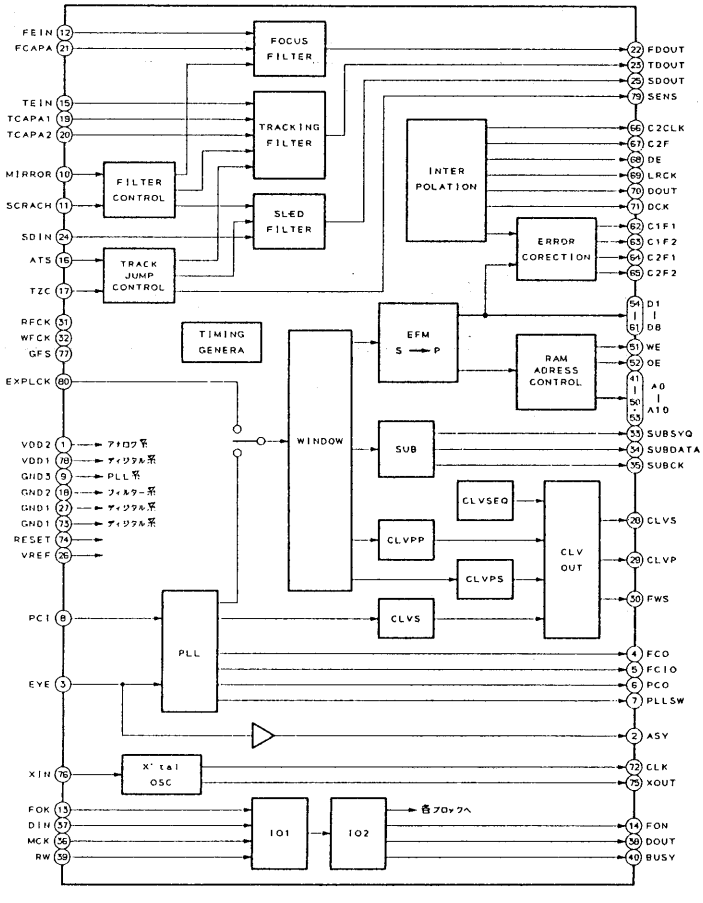

IC505 RF5C241

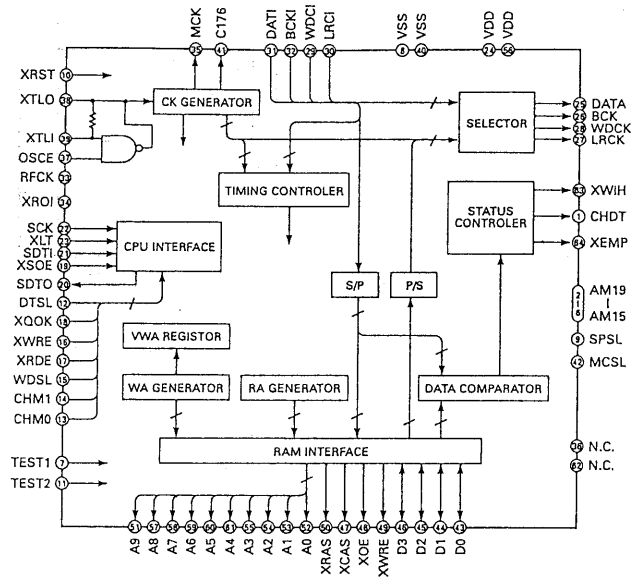

IC506 LH5116ZE

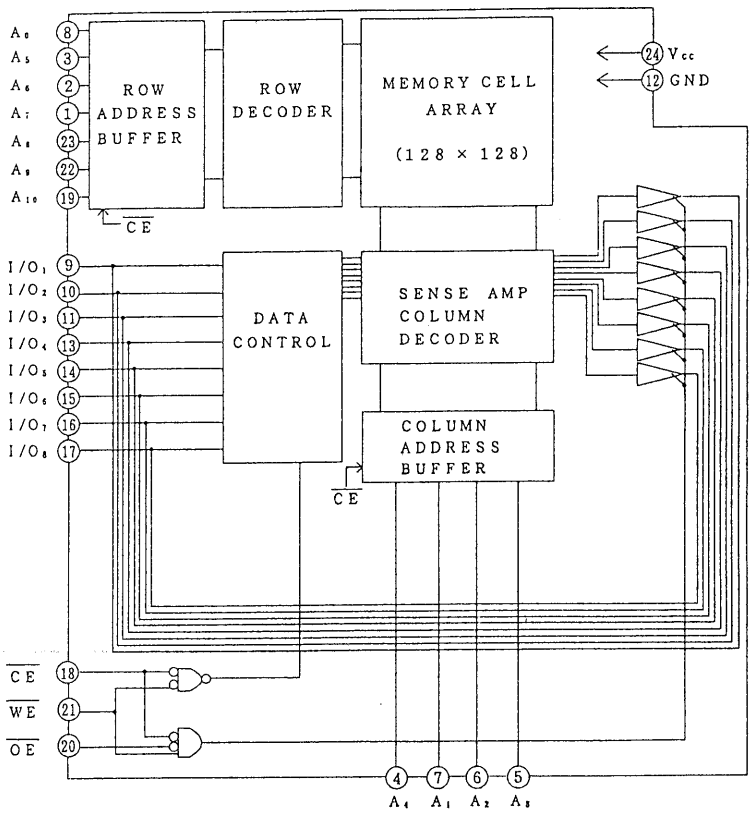

IC507 SC111281FU

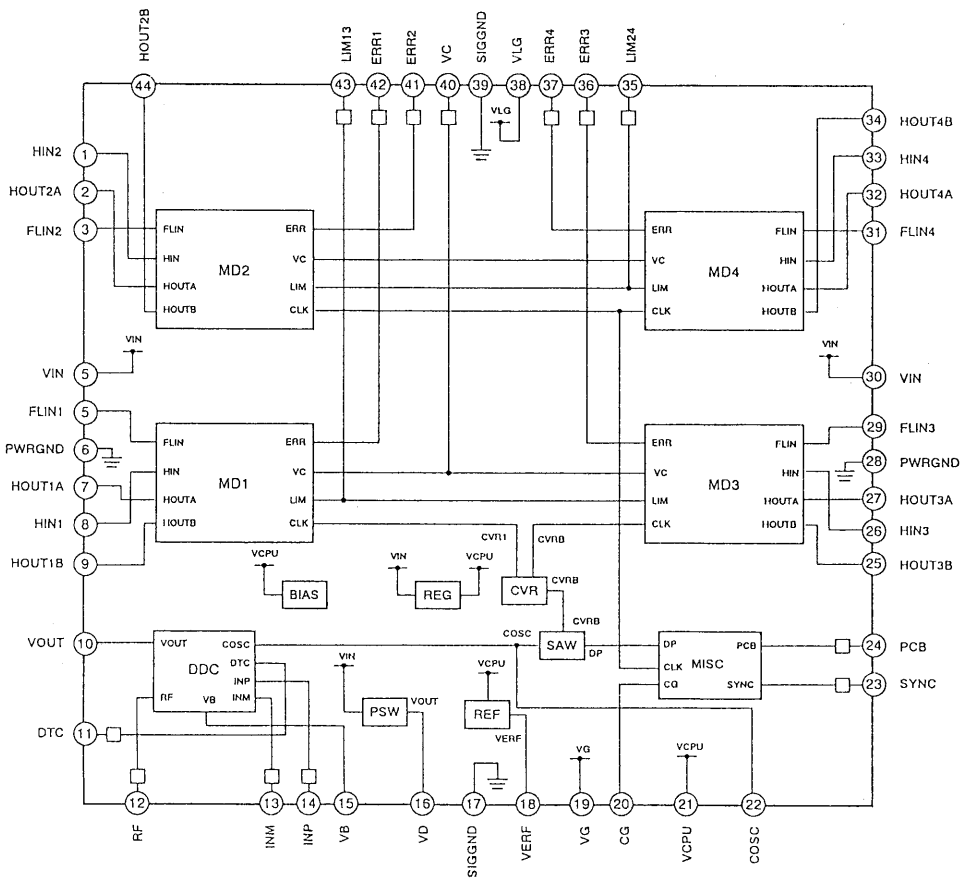

5-4. IC PIN FUNCTION
MAIN BOARD IC801 MSM65344-014GS-V1K

Pin No.	Pin Name	I/O	Description
1	COM3	O	LCD drive output. Connected to LCD COM3.
2 – 14	SEG0 – 12	O	LCD drive output. Connected to LCD S0~S12.
15 – 17	SEG13 – 15	—	Not used.
18	AGND	—	For A/D converter. Analog GND.
19	KEY	I	A/D key input of body key. PLAY (0.0), STOP (0.1VDD), FF (0.2VDD), FR (0.3VDD), PLAY MODE (0.4VDD), RPT/ENT (0.5VDD), ESP (0.6VDD)
20	RMKEY	I	A/D input of remote controller. FR/PLAY (0.9VDD), FF MODE (0.8VDD), STOP (0.7VDD)
21	VCCMNT	O	Voltage monitor of main DC-DC converter output.
22	BATMNT	I	Battery (DM-10/AM-3) voltage monitor.
23	CHGMNT	I	Charging voltage monitor in DM-10 rapid charging.
24	NC	I	Input terminal.
25	AVDD	—	Analog VDD.
26	D-MUTE	O	"H" digital mute ON. To TC9293FN.
27	A-MUTE	O	"H" analog mute ON.
28	CHG	O	"L" rapid charge ON.
29	EMPSIS	O	"H" emphasis ON. To TC9293FN.
30	LIGHT	—	Not used.
31	PCON	O	"L" power control ON. To SC111281LFU.
32	XDM1	I	"L" DM-10 IN. Charging battery detecting terminal.
33	DCIN	I	"L" DC IN. DC-IN detecting terminal.
34	TEST	I	"L" test (service) mode.
35	HOLD	I	"L" HOLD ON. To HOLD switch.
36	RSM	I	"L" RESUME ON. To RESUME switch.
37	OPEN	I	"L" CLOSE. To OPEN switch.
38	LS	I	"L" pick up clockwise circuit.
39	XSOE	O	"L" serial data permission. To RF5C241.
40	SCK	O	ESP serial clock. To RF5C241.
41	SDTI	I	ESP serial data input. From RF5C241.
42	DACLAT	—	Not used.
43	XWRE	O	Digital data writing permission signal, "L"permission. To RF5C241.
44	CLV-MUTE	O	CLV reverse prevention output. "L" CLV STOP.
45	RW	O	DSP serial data reading/writing switching singnal. To BU9310BKS.
46	SCLK	O	DSP serial clock. To BU9310BKS.
47	SUBQ	I	SUB-Q serial data input. To BU9310BKS.
48	DATA	O	DSP serial order output. To BU9310BKS.
49	ESPSL	—	Not used.
50	VCCADJ	—	Not used.
51	—	—	Not used.
52	VDD	—	Micro computer power supply. VDD=3.2V
53	BEEP	O	BEEP output.
54	DTSL	O	ESP/NORMAL switching terminal. ESP MODE with "H". To RF5C421.
55	XQOK	O	ESP sub code recognition signal. To RF5C241.

Pin No.	Pin Name	I/O	Description
56	SCOR	I	SCOR interrupting signal. From BU9310BKS.
57	XRDE	O	Readable with digital data reading permission signal, "L" from D-RAM. To RF5C241.
58	WDSL	O	ESP digital data connecting window selecting signal. To RF5C241.
59	FOKI	I	For FOCUS OK signal detection.
60	WP	I	Sleep mode canceling signal input terminal. Cancelled at trailing edge.
61	$\overline{\text{OSC1}}$		System clock generating device connecting terminal.
62	OSC0		
63	GND	—	GND.
64	$\overline{\text{RESET}}$	I	Micro computer reset terminal. "L" micro computer reset.
65	—	—	GND.
66	—	—	Not used.
67	CHM0	O	Digital data comparing mode SW0. To RFC5C241.
68	CHM1	O	Digital data comparing mode SW1. To RFC5C241.
69	XRST	O	System reset terminal "L" system IC reset.
70	C2MN	O	S-RAM over flow signal mute. "H" mute ON.
71	RMDATA	O	Data output for liquid crystal remote controller.
72	$\overline{\text{BUSY}}$	I	"L" track jumping. To BU9310BKS.
73	VDD1	O	LCD driving bias output.
74	VDD2		
75	VDD3		
76	C1		LCD driving bias generating condenser connecting terminal.
77	C2		
78	COM0	O	LCD driving output. Connected to LCD COM0~2.
79	COM1		
80	COM2		

REVISED

SECTION 6
EXPLODED VIEWS

NOTE:

- -XX and -X mean standardized parts, so they may have some difference from the original one.
- Color Indication of Appearance Parts
  Example:
  KNOB, BALANCE (WHITE) . . . (RED)
  ↑ Parts Color ↑ Cabinet's Color
- Items marked "*" are not stocked since they are seldom required for routine service. Some delay should be anticipated when ordering these items.
- The mechanical parts with no reference number in the exploded views are not supplied.
- Hardware (# mark) list and accessories and packing materials are given in the last of the electrical parts list.

The components identified by mark ⚠ or dotted line with mark ⚠ are critical for safety.
Replace only with part number specified.

Les composants identifiés par une marque ⚠ sont critiques pour la sécurité.
Ne les remplacer que par une pièce portant le neméro spécifié.

- Abbreviations
  CND : Canadian
  G : German
  AUS : Australian

(1) CABINET SECTION

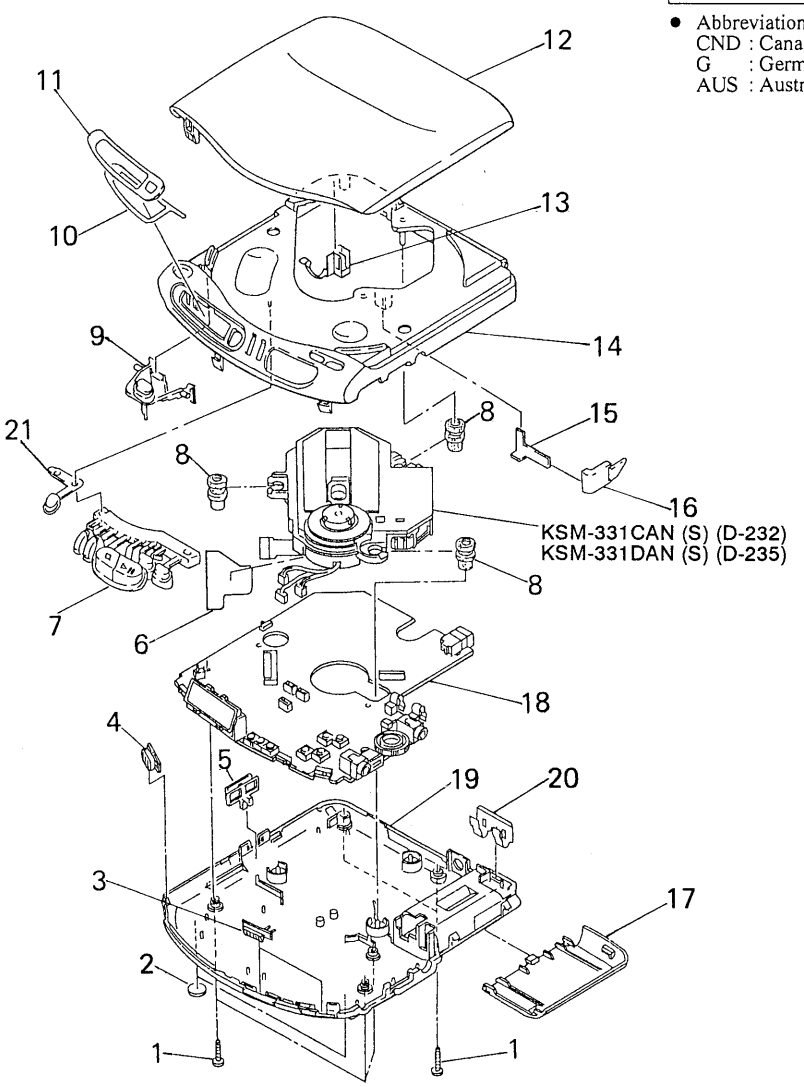

Ref. No.	Part No.	Description	Remark
1	4-958-597-01	SCREW	
2	4-962-025-01	FOOT, RUBBER	
3	4-964-894-01	KNOB (A/B) (BLACK)	
3	4-964-894-21	KNOB (A/B) (GRAY)	
4	4-964-893-01	KNOB (HOLD) (BLACK)	
4	4-964-893-21	KNOB (HOLD) (GRAY)	
5	4-964-895-01	KNOB (RESUME) (BLACK)	
5	4-964-895-21	KNOB (RESUME) (GRAY)	
6	4-956-818-01	RETAINER, FLEXIBLE	
7	4-964-902-01	BUTTON (OPE) (BLACK)	
7	4-964-902-21	BUTTON (OPE) (GRAY)	
8	4-947-759-01	INSULATOR (I)	
9	4-964-901-01	BUTTON (OPEN) (BLACK)	
9	4-964-901-21	BUTTON (OPEN) (GRAY)	
10	4-965-963-01	SHEET (LCD WINDOW), ADHESIVE	
11	4-964-900-01	WINDOW (LCD)	
12	4-964-907-01	LID (U), UPPER (BLACK) (D-232)	
12	4-964-908-01	LID, UPPER (BLACK) (D-235)	
12	4-964-908-11	LID, UPPER (BLUE) ··· (BLACK) (D-235)	
12	4-964-908-11	LID (J), UPPER (GOLD) ··· (GRAY) (D-232)	
13	4-964-896-01	SPRING (OPEN)	
14	4-964-906-01	CABINET (FRONT) (BLACK)	
14	4-964-906-21	CABINET (FRONT) (GRAY)	
15	4-964-897-01	SPRING (SEPARATOR)	
16	4-964-892-01	SEPARATOR	
17	4-964-904-01	LID, BATTERY CASE	
18	A-3276-372-A	MAIN BOARD, COMPLETE (D-232:US, CND, AEP, E, G, AUS, ~~D-235~~)	
	A-3276-603-A	MAIN BOARD, COMPLETE (D-235)	
18	A-3276-500-A	MAIN BOARD, COMPLETE (D-232:UK)	
19	4-964-905-01	CABINET (REAR) (D-235)	
19	4-964-905-11	CABINET (REAR) (BLACK) (D-232)	
19	4-964-184-01	CABINET (REAR) (GRAY) (D-232)	
20	4-944-349-11	TERMINAL BOARD (RELAY), BATTERY	
21	4-964-903-01	BUTTON (ESP)	

(2) OPTICAL PICK-UP BLOCK SECTION
(KSM-331CAN (S)) (D-232)
(KSM-331DAN (S)) (D-235)

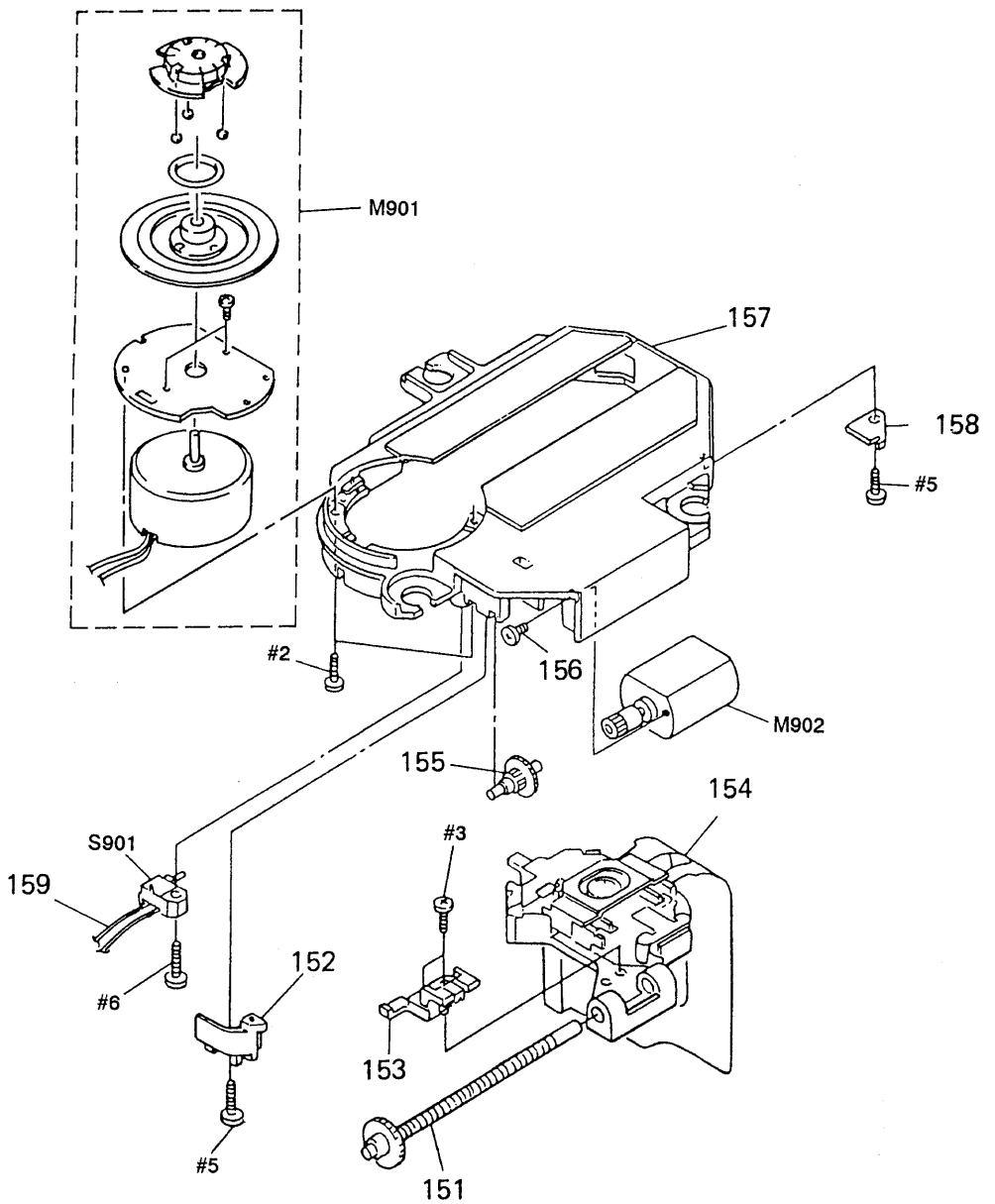

Ref. No.	Part No.	Description	Remark
151	X-2625-483-1	SCREW ASSY, SLED	
152	2-625-412-02	SPRING, SLED	
153	2-625-414-02	RACK	
⚠154	8-848-295-51	DEVICE, OPTICAL (KSS-331C) (D-232)	
⚠154	8-848-350-11	DEVICE, OPTICAL (KSS-331D) (D-235)	
155	2-625-410-01	GEAR (B)	
156	3-732-988-01	SCREW (M2X2.5)	

Ref. No.	Part No.	Description	Remark
157	2-625-415-05	CHSSIS, MD	
158	2-625-411-01	RETAINER, SHAFT	
159	1-948-418-21	HARNESS	
M901	X-2625-485-1	MOTOR ASSY, T.T. (SPINDLE)	
M902	X-2625-171-2	MOTOR ASSY, SLED	
S901	1-570-771-11	SWITCH (LIMIT)	

Note: The components identified by mark ⚠ or dotted line with mark ⚠ are critical for safety. Replace only with part number specified.	Note: Les composants identifiés par une marque ⚠ sont critiques pour la sécurité. Ne les remplacer que par une pièce portant le neméro spécifié.

SEE ADDITIONAL INFORMATION

SECTION 7
ELECTRICAL PARTS LIST

MAIN

NOTE:
- Due to standardization, replacements in the parts list may be different from the parts specified in the diagrams or the components used on the set.
- -XX and -X mean standardized parts, so they may have some difference from the original one.
- RESISTORS
  All resistors are in ohms.
  METAL:Metal-film resistor.
  METAL OXIDE: Metal oxide-film resistor.
  F:nonflammable
- Abbreviations
  CND : Canadian AUS : Australian G : German
  AEC : AC220V area in AEP model AEL : AC220-240V area in AEP model
- Items marked "*" are not stocked since they are seldom required for routine service. Some delay should be anticipated when ordering these items.
- SEMICONDUCTORS
  In each case, u:μ, for example:
  uA ..: μA.. uPA..: μPA..
  uPB..: μPB.. uPC..: μPC.. uPD..: μPD..
- CAPACITORS
  uF: μF
- COILS
  uH: μH

When indicating parts by reference number, please include the board.

The components identified by mark ⚠ or dotted line with mark. ⚠ are critical for safety. Replace only with part number specified.

Les composants identifiés par une marque ⚠ sont critiques pour la sécurité. Ne les remplacer que par une pièce portant le numéro spécifié.

Ref. No.	Part No.	Description			Remark
	A-3276-372-A	MAIN BOARD, COMPLETE (D-232:US, CND, AEP, E, G, AUS)			
		**********			
	A-3276-500-A	MAIN BOARD, COMPLETE (D-232:UK)			
		**********			
	A-3276-603-A	MAIN BOARD, COMPLETE (D-235)			
		**********			
	4-964-898-01	TERMINAL BOARD, BATTERY			
	4-964-899-01	HOLDER (LCD)			
		< CAPACITOR >			
C102	1-162-968-11	CERAMIC CHIP	0.0047uF	10%	50V
C106	1-126-163-11	ELECT	4.7uF	20%	50V
C107	1-135-091-00	TANTAL. CHIP	1uF	20%	16V
C109	1-164-222-11	CERAMIC CHIP	0.22uF		25V
C202	1-162-968-11	CERAMIC CHIP	0.0047uF	10%	50V
C206	1-126-163-11	ELECT	4.7uF	20%	50V
C207	1-135-091-00	TANTAL. CHIP	1uF	20%	16V
C209	1-164-222-11	CERAMIC CHIP	0.22uF		25V
C301	1-162-944-11	CERAMIC CHIP	18PF	5%	50V
C302	1-162-944-11	CERAMIC CHIP	18PF	5%	50V
C305	1-164-234-11	CERAMIC CHIP	1uF		10V
C306	1-163-038-00	CERAMIC CHIP	0.1uF		25V
C307	1-163-038-00	CERAMIC CHIP	0.1uF		25V
C308	1-124-434-00	ELECT	220uF	20%	4V
C309	1-163-038-00	CERAMIC CHIP	0.1uF		25V
C310	1-163-038-00	CERAMIC CHIP	0.1uF		25V
C311	1-164-234-11	CERAMIC CHIP	1uF		10V
C312	1-164-234-11	CERAMIC CHIP	1uF		10V
C313	1-162-964-11	CERAMIC CHIP	0.001uF	10%	50V
C314	1-135-201-11	TANTALUM CHIP	10uF	20%	4V
C315	1-164-234-11	CERAMIC CHIP	1uF		10V
C316	1-104-851-11	TANTAL. CHIP	10uF	20%	10V
C317	1-126-157-11	ELECT	10uF	20%	16V
C318	1-124-778-00	ELECT CHIP	22uF	20%	6.3V
C319	1-126-153-11	ELECT	22uF	20%	6.3V
C320	1-164-234-11	CERAMIC CHIP	1uF		10V
C321	1-164-234-11	CERAMIC CHIP	1uF		10V
C322	1-163-036-00	CERAMIC CHIP	0.068uF		50V
C323	1-163-036-00	CERAMIC CHIP	0.068uF		50V
C324	1-164-360-11	CERAMIC CHIP	0.1uF		16V
C334	1-124-778-00	ELECT CHIP	22uF	20%	6.3V
C335	1-162-964-11	CERAMIC CHIP	0.001uF	10%	50V
C336	1-162-964-11	CERAMIC CHIP	0.001uF	10%	50V
C338	1-164-505-11	CERAMIC CHIP	2.2uF		16V
C339	1-162-964-11	CERAMIC CHIP	0.001uF	10%	50V
C340	1-164-234-11	CERAMIC CHIP	1uF		10V
C341	1-164-234-11	CERAMIC CHIP	1uF		10V
C342	1-164-362-11	CERAMIC CHIP	470PF	5%	50V
C343	1-162-964-11	CERAMIC CHIP	0.001uF	10%	50V
C344	1-162-970-11	CERAMIC CHIP	0.01uF	10%	25V
C401	1-127-561-11	ELECT(SOLID)	33uF	20%	10V
C402	1-164-360-11	CERAMIC CHIP	0.1uF		16V
C403	1-164-492-11	CERAMIC CHIP	0.15uF	10%	16V
C404	1-127-561-11	ELECT(SOLID)	33uF	20%	10V
C405	1-162-949-11	CERAMIC CHIP	47PF	5%	50V
C406	1-164-360-11	CERAMIC CHIP	0.1uF		16V
C407	1-128-241-11	ELECT	220uF	20%	10V
C408	1-162-964-11	CERAMIC CHIP	0.001uF	10%	50V
C411	1-164-234-11	CERAMIC CHIP	1uF		10V
C412	1-104-851-11	TANTAL. CHIP	10uF	20%	10V
C413	1-163-038-00	CERAMIC CHIP	0.1uF		25V
C414	1-162-970-11	CERAMIC CHIP	0.01uF	10%	25V
C415	1-162-964-11	CERAMIC CHIP	0.001uF	10%	50V
C416	1-162-964-11	CERAMIC CHIP	0.001uF	10%	50V
C501	1-163-038-00	CERAMIC CHIP	0.1uF		25V
C502	1-127-561-11	ELECT(SOLID)	33uF	20%	10V
C503	1-164-360-11	CERAMIC CHIP	0.1uF		16V
C504	1-164-360-11	CERAMIC CHIP	0.1uF		16V
C505	1-126-154-11	ELECT	47uF	20%	6.3V
C506	1-162-944-11	CERAMIC CHIP	18PF	5%	50V
C507	1-164-360-11	CERAMIC CHIP	0.1uF		16V
C508	1-162-970-11	CERAMIC CHIP	0.01uF	10%	25V
C509	1-164-677-11	CERAMIC CHIP	0.033uF	10%	16V
C510	1-162-967-11	CERAMIC CHIP	0.0033uF	10%	50V
C511	1-164-489-11	CERAMIC CHIP	0.22uF	10%	16V
C513	1-135-180-21	TANTAL. CHIP	3.3uF	20%	10V

SEE ADDITIONAL INFORMATION

MAIN

Ref. No.	Part No.	Description		Remark	
C514	1-124-584-00	ELECT	100uF	20%	10V
C515	1-164-360-11	CERAMIC CHIP	0. 1uF		16V
C516	1-163-809-11	CERAMIC CHIP	0. 047uF	10%	25V
C517	1-164-489-11	CERAMIC CHIP	0. 22uF	10%	16V
C518	1-164-217-11	CERAMIC CHIP	150PF	5%	50V
C519	1-135-181-21	TANTALUM CHIP	4. 7uF	20%	6. 3V
C520	1-162-966-11	CERAMIC CHIP	0. 0022uF	10%	50V
C521	1-164-005-11	CERAMIC CHIP	0. 47uF		25V
C522	1-162-966-11	CERAMIC CHIP	0. 0022uF	10%	50V
C523	1-162-966-11	CERAMIC CHIP	0. 0022uF	10%	50V
C524	1-162-966-11	CERAMIC CHIP	0. 0022uF	10%	50V
C525	1-162-966-11	CERAMIC CHIP	0. 0022uF	10%	50V
C526	1-135-318-11	TANTAL. CHIP	33uF	20%	4V
C527	1-162-953-11	CERAMIC CHIP	100PF	5%	50V
C528	1-163-809-11	CERAMIC CHIP	0. 047uF	10%	25V
C529	1-164-489-11	CERAMIC CHIP	0. 22uF	10%	16V
C530	1-164-344-11	CERAMIC CHIP	0. 068uF	10%	25V
C531	1-104-847-11	TANTAL. CHIP	22uF	20%	4V
C533	1-104-847-11	TANTAL. CHIP	22uF	20%	4V
C534	1-164-227-11	CERAMIC CHIP	0. 022uF	10%	25V
C537	1-104-851-11	TANTAL. CHIP	10uF	20%	10V
C538	1-128-038-21	ELECT CHIP	1. 5uF	0	35V
C539	1-164-360-11	CERAMIC CHIP	0. 1uF		16V
C540	1-104-852-11	TANTAL. CHIP	22uF	20%	10V
C541	1-164-234-11	CERAMIC CHIP	1uF		10V
C542	1-162-968-11	CERAMIC CHIP	0. 0047uF	10%	50V
C543	1-164-360-11	CERAMIC CHIP	0. 1uF		16V
C544	1-164-234-11	CERAMIC CHIP	1uF		10V
C545	1-164-473-11	CERAMIC CHIP	820PF	5%	50V
C546	1-164-234-11	CERAMIC CHIP	1uF		10V
C547	1-164-222-11	CERAMIC CHIP	0. 22uF		25V
C548	1-164-360-11	CERAMIC CHIP	0. 1uF		16V
C549	1-164-234-11	CERAMIC CHIP	1uF		10V
C550	1-164-005-11	CERAMIC CHIP	0. 47uF		25V
C551	1-104-847-11	TANTAL. CHIP	22uF	20%	4V
C552	1-104-851-11	TANTAL. CHIP	10uF	20%	10V
C553	1-128-038-21	ELECT CHIP	1. 5uF	0	35V
C554	1-164-360-11	CERAMIC CHIP	0. 1uF		16V
C555	1-164-360-11	CERAMIC CHIP	0. 1uF		16V
C557	1-162-947-11	CERAMIC CHIP	33PF	5%	50V
C558	1-162-953-11	CERAMIC CHIP	100PF	5%	50V
C560	1-162-970-11	CERAMIC CHIP	0. 01uF	10%	25V
C561	1-164-677-11	CERAMIC CHIP	0. 033uF	10%	16V
C563	1-164-005-11	CERAMIC CHIP	0. 47uF		25V
C564	1-162-966-11	CERAMIC CHIP	0. 0022uF	10%	50V
C565	1-162-913-11	CERAMIC CHIP	8PF	0. 5PF	50V
C566	1-162-913-11	CERAMIC CHIP	8PF	0. 5PF	50V
C568	1-164-004-11	CERAMIC CHIP	0. 1uF	10%	25V
C801	1-164-227-11	CERAMIC CHIP	0. 022uF	10%	25V
C802	1-164-227-11	CERAMIC CHIP	0. 022uF	10%	25V
C803	1-164-360-11	CERAMIC CHIP	0. 1uF		16V
C804	1-164-360-11	CERAMIC CHIP	0. 1uF		16V
C805	1-162-970-11	CERAMIC CHIP	0. 01uF	10%	25V
C806	1-135-201-11	TANTALUM CHIP	10uF	20%	4V
C807	1-164-234-11	CERAMIC CHIP	1uF		10V
C808	1-164-234-11	CERAMIC CHIP	1uF		10V
C809	1-162-970-11	CERAMIC CHIP	0. 01uF	10%	25V
C810	1-164-227-11	CERAMIC CHIP	0. 022uF	10%	25V
C811	1-162-964-11	CERAMIC CHIP	0. 001uF	10%	50V

< CONNECTOR >

CN501	1-566-534-11	CONNECTOR, FPC (ZIF) 18P	
* CN502	1-695-320-51	PIN, CONNECTOR (1. 5MM) (SMD)	2P
* CN503	1-695-320-31	PIN, CONNECTOR (1. 5MM) (SMD)	2P
* CN504	1-695-320-21	PIN, CONNECTOR (1. 5MM) (SMD)	2P

< DIODE >

D101	8-719-422-46	DIODE	MA8056-TX
D201	8-719-422-46	DIODE	MA8056-TX
D301	8-719-941-86	DIODE	DAN202U
D303	8-719-422-46	DIODE	MA8056-TX
D307	8-719-941-86	DIODE	DAN202U
D308	8-719-422-46	DIODE	MA8056-TX
D309	8-719-049-11	DIODE	1SS377-TE85L
D310	8-719-941-86	DIODE	DAN202U
D401	8-719-049-09	DIODE	1SS367
D402	8-719-975-33	DIODE	RB110C
D403	8-719-975-33	DIODE	RB110C
D404	8-719-975-33	DIODE	RB110C
D405	8-719-938-72	DIODE	SB01-05CP
D501	8-719-049-11	DIODE	1SS377-TE85L
D502	8-719-049-09	DIODE	1SS367
D503	8-719-049-10	DIODE	1SS374-TE85L
D504	8-719-049-09	DIODE	1SS367
D506	8-719-977-34	DIODE	DTZ12
D507	8-719-049-09	DIODE	1SS367
D508	8-719-422-46	DIODE	MA8056-TX
D509	8-719-941-86	DIODE	DAN202U
D801	8-719-941-86	DIODE	DAN202U
D802	8-719-941-09	DIODE	DAP202U
D803	8-719-941-86	DIODE	DAN202U

< FERRITE BEAD >

FB101	1-550-907-21	BEAD, FERRITE (CHIP)
FB102	1-414-233-21	INDUCTOR, FERRITE BEAD
FB201	1-550-907-21	BEAD, FERRITE (CHIP)
FB202	1-414-233-21	INDUCTOR, FERRITE BEAD
FB301	1-414-233-21	INDUCTOR, FERRITE BEAD

SEE ADDITIONAL INFORMATION

MAIN

Ref. No.	Part No.	Description	Remark
FB302	1-550-907-21	BEAD, FERRITE (CHIP)	
FB303	1-550-907-21	BEAD, FERRITE (CHIP)	
FB304	1-414-233-21	INDUCTOR, FERRITE BEAD	
FB501	1-414-233-21	INDUCTOR, FERRITE BEAD	
		< IC >	
IC301	8-759-263-31	IC TC9293FN-EL	
IC302	8-759-179-65	IC BA3124F-T1	
IC303	8-759-284-88	IC BA3574AFS-T1	
IC401	8-759-176-73	IC RS5RJ32271-T1	
IC402	8-759-710-55	IC NJM2100M	
IC501	8-759-264-79	IC BA6373K	
IC502	8-759-293-61	IC BU9310BKS	
IC503	8-759-710-55	IC NJM2100M	
IC504	8-759-031-84	IC SC7S04F	
IC505	8-759-179-71	IC RF5C241	
IC506	8-759-822-79	IC LC3517RM-15	
IC507	8-759-263-30	IC SC111281FU	
IC508	8-759-264-82	IC DRCC4M	
IC801	8-759-293-58	IC MSM65344-014GS-V1K	
		< JACK >	
J301	1-565-287-41	JACK (LINE OUT)	
J302	1-580-680-11	JACK (Ω/REMOTE)	
J401	1-691-099-41	JACK, DC (POLARITY UNIFIED TYPE) (DC IN 4.5V)	
		< JUMPER RESISTOR >	
JR301	1-216-864-11	METAL CHIP 0 5% 1/16W	
JR501	1-216-864-11	METAL CHIP 0 5% 1/16W	
JR502	1-216-864-11	METAL CHIP 0 5% 1/16W	
JR504	1-216-864-11	METAL CHIP 0 5% 1/16W	
JR505	1-216-864-11	METAL CHIP 0 5% 1/16W	
JR506	1-216-296-00	METAL CHIP 0 5% 1/8W	
JR507	1-216-296-00	METAL CHIP 0 5% 1/8W	
JR508	1-216-296-00	METAL CHIP 0 5% 1/8W	
JR509	1-216-296-00	METAL CHIP 0 5% 1/8W	
JR514	1-216-864-11	METAL CHIP 0 5% 1/16W	
		< COIL >	
L301	1-412-002-31	INDUCTOR CHIP 4.7uH	
L303	1-414-398-11	INDUCTOR 10uH	
L304	1-412-002-31	INDUCTOR CHIP 4.7uH	
L305	1-410-997-31	INDUCTOR CHIP 2.2uH	
L401	1-412-622-51	INDUCTOR 10uH	
L402	1-412-630-51	INDUCTOR 47uH	
L502	1-414-398-11	INDUCTOR 10uH	
L503	1-414-398-11	INDUCTOR 10uH	
L504	1-414-398-11	INDUCTOR 10uH	
L505	1-414-402-11	INDUCTOR 47uH	
L506	1-414-402-11	INDUCTOR 47uH	
L507	1-414-402-11	INDUCTOR 47uH	
L508	1-414-402-11	INDUCTOR 47uH	
L509	1-414-398-11	INDUCTOR 10uH	
		< LIQUID CRYSRAL >	
ND801	1-810-521-11	DISPLAY PANEL, LIQUID CRYSTAL	
		< TRANSISTOR >	
Q301	8-729-230-60	TRANSISTOR 2SA1586-YG	
Q307	8-729-402-13	TRANSISTOR XN1501	
Q308	8-729-101-07	TRANSISTOR 2SB798-DL	
Q309	8-729-402-32	TRANSISTOR 2SD1819A-R	
Q401	8-729-014-18	TRANSISTOR RN2303-TE85L	
Q402	8-729-022-67	TRANSISTOR 2SC3650-TD	
Q403	8-729-923-36	TRANSISTOR 2SD1963-Q.R	
Q408	8-729-922-34	TRANSISTOR 2SD1758F5-QR	
Q409	8-729-402-32	TRANSISTOR 2SD1819A-R	
Q410	8-729-403-02	TRANSISTOR XN4212	
Q411	8-729-014-18	TRANSISTOR RN2303-TE85L	
Q412	8-729-920-56	TRANSISTOR FMG1	
Q413	8-729-014-18	TRANSISTOR RN2303-TE85L	
Q501	8-729-904-86	TRANSISTOR 2SB1197K-Q	
Q503	8-729-014-34	TRANSISTOR RN2311-TE85L	
Q504	8-729-402-45	TRANSISTOR UN5212	
Q505	8-729-420-44	TRANSISTOR UN5210	
Q506	8-729-014-34	TRANSISTOR RN2311-TE85L	
Q801	8-729-402-32	TRANSISTOR 2SD1819A-R	
Q804	8-729-402-32	TRANSISTOR 2SD1819A-R	
		< RESISTOR >	
R109	1-216-810-11	METAL CHIP 120 5% 1/16W	
R110	1-216-845-11	METAL CHIP 100K 5% 1/16W	
R111	1-216-813-11	METAL CHIP 220 5% 1/16W	
R112	1-216-809-11	METAL CHIP 100 5% 1/16W	
R113	1-216-835-11	METAL CHIP 15K 5% 1/16W	
R114	1-216-789-11	METAL CHIP 2.2 5% 1/16W	
R115	1-216-831-11	METAL CHIP 6.8K 5% 1/16W	
R209	1-216-810-11	METAL CHIP 120 5% 1/16W	
R210	1-216-845-11	METAL CHIP 100K 5% 1/16W	
R211	1-216-813-11	METAL CHIP 220 5% 1/16W	
R212	1-216-809-11	METAL CHIP 100 5% 1/16W	
R213	1-216-835-11	METAL CHIP 15K 5% 1/16W	
R214	1-216-789-11	METAL CHIP 2.2 5% 1/16W	
R215	1-216-831-11	METAL CHIP 6.8K 5% 1/16W	
R302	1-216-857-11	METAL CHIP 1M 5% 1/16W	
R303	1-216-833-11	METAL CHIP 10K 5% 1/16W	
R304	1-216-833-11	METAL CHIP 10K 5% 1/16W	
R305	1-216-013-00	METAL CHIP 33 5% 1/10W	

SEE ADDITIONAL INFORMATION

MAIN

Ref. No.	Part No.	Description				Remark
R306	1-216-809-11	METAL CHIP	100	5%		1/16W
R307	1-216-797-11	METAL CHIP	10	5%		1/16W
R308	1-216-845-11	METAL CHIP	100K	5%		1/16W
R309	1-216-845-11	METAL CHIP	100K	5%		1/16W
R310	1-216-839-11	METAL CHIP	33K	5%		1/16W
R317	1-216-817-11	METAL CHIP	470	5%		1/16W
R318	1-216-821-11	METAL CHIP	1K	5%		1/16W
R319	1-216-835-11	METAL CHIP	15K	5%		1/16W
R320	1-216-823-11	METAL CHIP	1.5K	5%		1/16W
R321	1-218-345-11	METAL GLAZE	9.1K	5%		1/16W
R322	1-216-821-11	METAL CHIP	1K	5%		1/16W
R323	1-216-013-00	METAL CHIP	33	5%		1/10W
R324	1-216-845-11	METAL CHIP	100K	5%		1/16W
R401	1-216-844-11	METAL CHIP	82K	5%		1/16W
R402	1-216-834-11	METAL CHIP	12K	5%		1/16W
R403	1-216-833-11	METAL CHIP	10K	5%		1/16W
R404	1-216-844-11	METAL CHIP	82K	5%		1/16W
R405	1-216-833-11	METAL CHIP	10K	5%		1/16W
R406	1-216-805-11	METAL CHIP	47	5%		1/16W
R407	1-216-809-11	METAL CHIP	100	5%		1/16W
R410	1-216-857-11	METAL CHIP	1M	5%		1/16W
R411	1-216-857-11	METAL CHIP	1M	5%		1/16W
R412	1-216-857-11	METAL CHIP	1M	5%		1/16W
R413	1-216-857-11	METAL CHIP	1M	5%		1/16W
R414	1-216-854-11	METAL CHIP	560K	5%		1/16W
R415	1-217-671-11	METAL CHIP	1	5%		1/10W
R416	1-217-671-11	METAL CHIP	1	5%		1/10W
R417	1-218-724-11	METAL CHIP	22K	0.50%		1/16W
R418	1-216-821-11	METAL CHIP	1K	5%		1/16W
R419	1-218-734-11	METAL CHIP	56K	0.50%		1/16W
R420	1-218-724-11	METAL CHIP	22K	0.50%		1/16W
R421	1-218-717-11	METAL CHIP	11K	0.50%		1/16W
R422	1-218-870-11	METAL CHIP	9.1K	0.50%		1/16W
R423	1-218-720-11	METAL CHIP	15K	0.50%		1/16W
R424	1-216-019-00	METAL CHIP	56	5%		1/10W
R501	1-216-845-11	METAL CHIP	100K	5%		1/16W
R502	1-216-829-11	METAL CHIP	4.7K	5%		1/16W
R503	1-216-829-11	METAL CHIP	4.7K	5%		1/16W
R504	1-216-839-11	METAL CHIP	33K	5%		1/16W
R505	1-211-992-11	METAL CHIP	91	0.50%		1/16W
R506	1-217-671-11	METAL CHIP	1	5%		1/10W
R507	1-216-845-11	METAL CHIP	100K	5%		1/16W
R508	1-218-706-11	METAL CHIP	3.9K	0.50%		1/16W
R509	1-218-736-11	METAL CHIP	68K	0.50%		1/16W
R510	1-218-870-11	METAL CHIP	9.1K	0.50%		1/16W
R511	1-218-867-11	METAL CHIP	6.8K	0.50%		1/16W
R512	1-216-846-11	METAL CHIP	120K	5%		1/16W
R513	1-216-833-11	METAL CHIP	10K	5%		1/16W
R514	1-216-842-11	METAL CHIP	56K	5%		1/16W
R515	1-216-833-11	METAL CHIP	10K	5%		1/16W
R516	1-218-714-11	METAL CHIP	8.2K	0.50%		1/16W
R517	1-218-724-11	METAL CHIP	22K	0.50%		1/16W
R518	1-218-886-11	METAL CHIP	43K	0.50%		1/16W
R519	1-216-849-11	METAL CHIP	220K	5%		1/16W
R520	1-216-844-11	METAL CHIP	82K	5%		1/16W
R521	1-216-837-11	METAL CHIP	22K	5%		1/16W
R522	1-216-833-11	METAL CHIP	10K	5%		1/16W
R523	1-216-821-11	METAL CHIP	1K	5%		1/16W
R524	1-216-833-11	METAL CHIP	10K	5%		1/16W
R525	1-216-833-11	METAL CHIP	10K	5%		1/16W
R526	1-216-857-11	METAL CHIP	1M	5%		1/16W
R527	1-216-855-11	METAL CHIP	680K	5%		1/16W
R528	1-216-841-11	METAL CHIP	47K	5%		1/16W
R529	1-216-849-11	METAL CHIP	220K	5%		1/16W
R530	1-216-825-11	METAL CHIP	2.2K	5%		1/16W
R531	1-216-825-11	METAL CHIP	2.2K	5%		1/16W
R532	1-216-837-11	METAL CHIP	22K	5%		1/16W
R534	1-216-847-11	METAL CHIP	150K	5%		1/16W
R535	1-216-833-11	METAL CHIP	10K	5%		1/16W
R536	1-216-857-11	METAL CHIP	1M	5%		1/16W
R537	1-216-833-11	METAL CHIP	10K	5%		1/16W
R538	1-216-825-11	METAL CHIP	2.2K	5%		1/16W
R539	1-216-843-11	METAL CHIP	68K	5%		1/16W
R540	1-216-833-11	METAL CHIP	10K	5%		1/16W
R541	1-216-833-11	METAL CHIP	10K	5%		1/16W
R542	1-216-830-11	METAL CHIP	5.6K	5%		1/16W
R543	1-216-830-11	METAL CHIP	5.6K	5%		1/16W
R544	1-216-823-11	METAL CHIP	1.5K	5%		1/16W
R545	1-216-847-11	METAL CHIP	150K	5%		1/16W
R546	1-216-845-11	METAL CHIP	100K	5%		1/16W
R547	1-216-857-11	METAL CHIP	1M	5%		1/16W
R548	1-216-821-11	METAL CHIP	1K	5%		1/16W
R549	1-216-845-11	METAL CHIP	100K	5%		1/16W
R551	1-216-839-11	METAL CHIP	33K	5%		1/16W
R552	1-216-849-11	METAL CHIP	220K	5%		1/16W
R554	1-216-849-11	METAL CHIP	220K	5%		1/16W
R557	1-218-705-11	METAL CHIP	3.6K	0.50%		1/16W
R559	1-216-833-11	METAL CHIP	10K	5%		1/16W
R802	1-216-857-11	METAL CHIP	1M	5%		1/16W
R804	1-216-845-11	METAL CHIP	100K	5%		1/16W
R805	1-216-857-11	METAL CHIP	1M	5%		1/16W
R806	1-216-820-11	METAL CHIP	820	5%		1/16W
R807	1-216-822-11	METAL CHIP	1.2K	5%		1/16W
R808	1-216-823-11	METAL CHIP	1.5K	5%		1/16W
R809	1-216-825-11	METAL CHIP	2.2K	5%		1/16W
R810	1-216-827-11	METAL CHIP	3.3K	5%		1/16W
R811	1-216-829-11	METAL CHIP	4.7K	5%		1/16W

SEE ADDITIONAL INFORMATION

MAIN | RF SUB

Ref. No.	Part No.	Description			Remark
R812	1-216-857-11	METAL CHIP	1M	5%	1/16W
R813	1-216-854-11	METAL CHIP	560K	5%	1/16W
R814	1-218-716-11	METAL CHIP	10K	0.50%	1/16W
R815	1-216-861-11	METAL CHIP	2.2M	5%	1/16W
R816	1-216-857-11	METAL CHIP	1M	5%	1/16W
		< VARIABLE RESISTOR >			
RV301	1-223-382-11	RES, VAR, CARBON 10K/10K (VOLUME)			
RV401	1-223-578-11	RES, ADJ, METAL GLAZE 22K			
RV501	1-223-612-11	RES, ADJ, METAL GLAZE 47K			
RV502	1-223-695-11	RES, ADJ, METAL GLAZE 10K			
RV503	1-223-578-11	RES, ADJ, METAL GLAZE 22K			
RV504	1-223-578-11	RES, ADJ, METAL GLAZE 22K			
RV505	1-223-612-11	RES, ADJ, METAL GLAZE 47K			
		< SWITCH >			
S301	1-692-605-11	SWITCH, SLIDE (BASS BOOST)			
S302	1-692-605-11	SWITCH, SLIDE (AVLS)			
S801	1-572-922-11	SWITCH, SLIDE (HOLD)			
S802	1-572-198-11	SWITCH, KEYBOARD (▶II)			
S803	1-572-198-11	SWITCH, KEYBOARD (■)			
S804	1-572-198-11	SWITCH, KEYBOARD (▶▶I)			
S805	1-572-198-11	SWITCH, KEYBOARD (I◀◀)			
S806	1-572-198-11	SWITCH, KEYBOARD (REPEAT/ENTER)			
S807	1-572-198-11	SWITCH, KEYBOARD (PLAY MODE)			
S808	1-572-198-11	SWITCH, KEYBOARD (ESP)			
S809	1-692-532-21	SWITCH, PUSH (1 KEY) (BATT SW)			
S810	1-570-953-11	SWITCH, PUSH (1 KEY) (OPEN)			
S811	1-572-922-11	SWITCH, SLIDE (RESUME(ON/OFF))			
		< TRANSFORMER >			
T401	1-423-636-11	TRANSFORMER, DC-DC CONVERTER			
		< VIBRATOR >			
X301	1-579-345-11	VIBRATOR, CERAMIC (16.94MHz)			
X801	1-579-956-11	VIBRATOR, CERAMIC (3.58MHz)			

****

RF SUB BOARD
(Including MAIN BOARD, COMPLETE)
****

Ref. No.	Part No.	Description			Remark
		< CAPACTOR >			
C701	1-104-847-11	TANTAL CHIP	22uF	20%	4V
C702	1-162-966-11	CERAMIC CHIP	0.0022uF	10%	50V
C703	1-162-970-11	CERAMIC CHIP	0.01uF	10%	25V
C704	1-164-004-11	CERAMIC CHIP	0.1uF	10%	25V
		< DIODE >			
D701	8-719-404-46	DIODE MA110			
		< TORANSISTOR >			
Q703	8-729-402-32	TORANSISTOR 2SD1819A-R			
Q704	8-729-402-32	TORANSISTOR 2SD1819A-R			
		< RESISTOR >			
R701	1-216-825-11	METAL CHIP	2.2K	5%	1/16W
R702	1-216-833-11	METAL CHIP	10K	5%	1/16W
R703	1-216-835-11	METAL CHIP	15K	5%	1/16W
R704	1-216-845-11	METAL CHIP	100K	5%	1/16W
R705	1-216-849-11	METAL CHIP	220K	5%	1/16W
R706	1-216-849-11	METAL CHIP	220K	5%	1/16W
R707	1-216-849-11	METAL CHIP	220K	5%	1/16W
R708	1-216-853-11	METAL CHIP	470K	5%	1/16W

****

MISCELLANEOUS
****

⚠154	8-848-295-51	DEVICE, OPTICAL (KSS-331C) (D-232)
⚠154	8-848-350-11	DEVICE, OPTICAL (KSS-331D) (D-235)
159	1-948-418-21	HARNESS
M901	X-2625-485-1	MOTOR ASSY, T.T. (SPINDLE)
M902	X-2625-171-2	MOTOR ASSY, SLED
S901	1-570-771-11	SWITCH (LIMIT)

****

ACCESSORIES & PACKING MATERIALS
****

⚠	1-467-007-21	ADAPTOR, AC (AC-E455) (D-232:AUS)
⚠	1-467-008-11	ADAPTOR, AC (AC-E455) (D-232:AEP, G)
⚠	1-467-009-11	ADAPTOR, AC (AC-E455) (D-232:US, CND)
⚠	1-467-013-11	ADAPTOR, AC (AC-E455) (D-232:UK)
⚠	1-467-550-11	ADAPTOR, AC (AC-E455A) (D-232:E/D-235)
	1-467-702-11	REMOTE COMMANDER (BLACK)
	1-467-702-21	REMOTE COMMANDER (BLUE)
	1-528-444-11	BATTERY PACK (BP-DM10) (D-232:US, CND, UK, E, AUS/D-235)
	1-528-444-21	BATTERY PACK (BP-DM10) (D-232:AEP, G)
	1-559-906-32	CORD, CONNECTION
	1-569-007-11	ADAPTER, CONVERSION 2P (D-232:E/D-235)
	3-758-572-01	MANUAL, INSTRUCTION (JAPANESE) (D-235)
	3-758-572-11	MANUAL, INSTRUCTION (SPANISH) (D-232:AEC, E/D-235)

The components identified by mark ⚠ or dotted line with mark. ⚠ are critical for safety. Replace only with part number specified.	Les composants identifiés par une marque ⚠ sont critiques pour la sécurité. Ne les remplacer que par une pièce portant le numéro spécifié.

Ref. No.	Part No.	Description	Remark
	3-758-572-21	MANUAL, INSTRUCTION (ENGLISH) (D-232:AEP, UK, E, G, AUS/D-235)	
	3-758-572-31	MANUAL, INSTRUCTION (FRENCH) (D-232:AEP, G/D-235)	
	3-758-572-41	MANUAL, INSTRUCTION(DUTCH) (D-232:AEC, G)	
	3-758-572-51	MANUAL, INSTRUCTION(SWEDISH) (D-232:AEC, G)	
	3-758-572-61	MANUAL, INSTRUCTION(PORTUGUESE) (D-232:AEC)	
	3-758-572-71	MANUAL, INSTRUCTION(GERMAN) (D-232:AEL, G)	
	3-758-572-81	MANUAL, INSTRUCTION(ITALIAN) (D-232:AEL)	
	3-759-006-41	MANUAL, INSTRUCTION(CHINESE) (D-235)	
	3-759-006-51	MANUAL, INSTRUCTION(CHINESE) (D-232:E)	
	3-759-007-21	MANUAL, INSTRUCTION(ENGLISH) (D-232:US, CND)	
	3-759-007-31	MANUAL, INSTRUCTION(FRENCH) (D-232:CND)	
	4-966-063-01	CASE, CARRYING (D-235)	
*	4-966-073-01	INDIVIDUAL CARTON (D-232:AEP, UK, G/D-235)	
*	4-966-074-01	CUSHION (D-232:E/D-235)	
*	4-966-077-01	CUSHION (D-232:US)	
*	4-966-078-01	INDIVIDUAL CARTON (D-232:US, CND)	
*	4-968-369-01	INDIVIDUAL CARTON (D-232:AUS)	
*	4-968-371-01	INDIVIDUAL CARTON (D-232:E)	
	8-953-011-90	HEADPHONE MDR-014B//O SET (D-232:US)	
	8-953-537-91	HEADPHONE MDR-E741MP//K1 SET (D-232:AEP, UK, E, G, AUS/D-235)	
	8-953-538-91	HEADPHONE MDR-E741//K1 SET (D-232:CND)	

****

****
HARDWARE LIST
****

#2	7-627-852-17	SCREW, PRECISION +P 1.7X4
#3	7-627-852-18	SCREW, PRECISION +P 1.7X4 TYPE 3
#5	7-685-104-19	SCREW (2X6), TAPPING (B)
#6	7-685-105-19	SCREW (2X8), TAPPING (B)

English
94F0591-1
Printed in Japan

Sony Corporation
Consumer A&V Products Company
Personal A&V Products Div.

Published by Home A&V Products Div.
Quality Engineering Dept.

9-959-621-11
(Including 9-959-621-91)

REVISED

D-232/235

SONY

SERVICE MANUAL

US Model
Canadian Model
AEP Model
UK Model
E Model
Australian Model
D-232
Tourist Model
D-235

SUPPLEMENT-1

File this supplement with the service manual.

Subject: 1. Board Modification
~~2. Correction~~

(ECN-CD450600)

1. BOARD MODIFICATION

Two types of the printed circuit board exist because the board type has been changed in the production. This manual contains the block diagram, the printed wiring boards, the schematic diagram, and the electrical parts list of only the new board type. For other information, refer to the D-232/235 service manual (9-959-621-11) previously issued.

- **New/Former Discrimination**

D-232
Former Type : 1-652-410-11
New Type : 1-652-410-12 (Type A)
: 1-652-410-13 (Type B, C)
D-235
Former Type : 1-652-410-11
New Type : 1-652-410-21 (Type A)
: 1-652-410-22 (Type B)

MAIN BOARD – SIDE B –

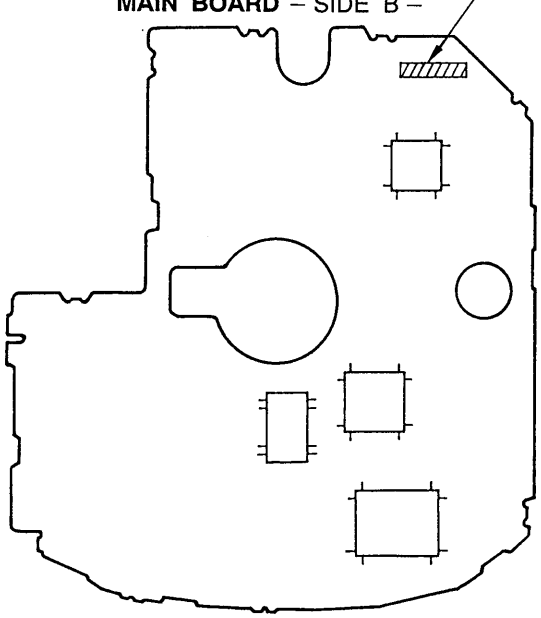

1-1. BLOCK DIAGRAM

D-232/235

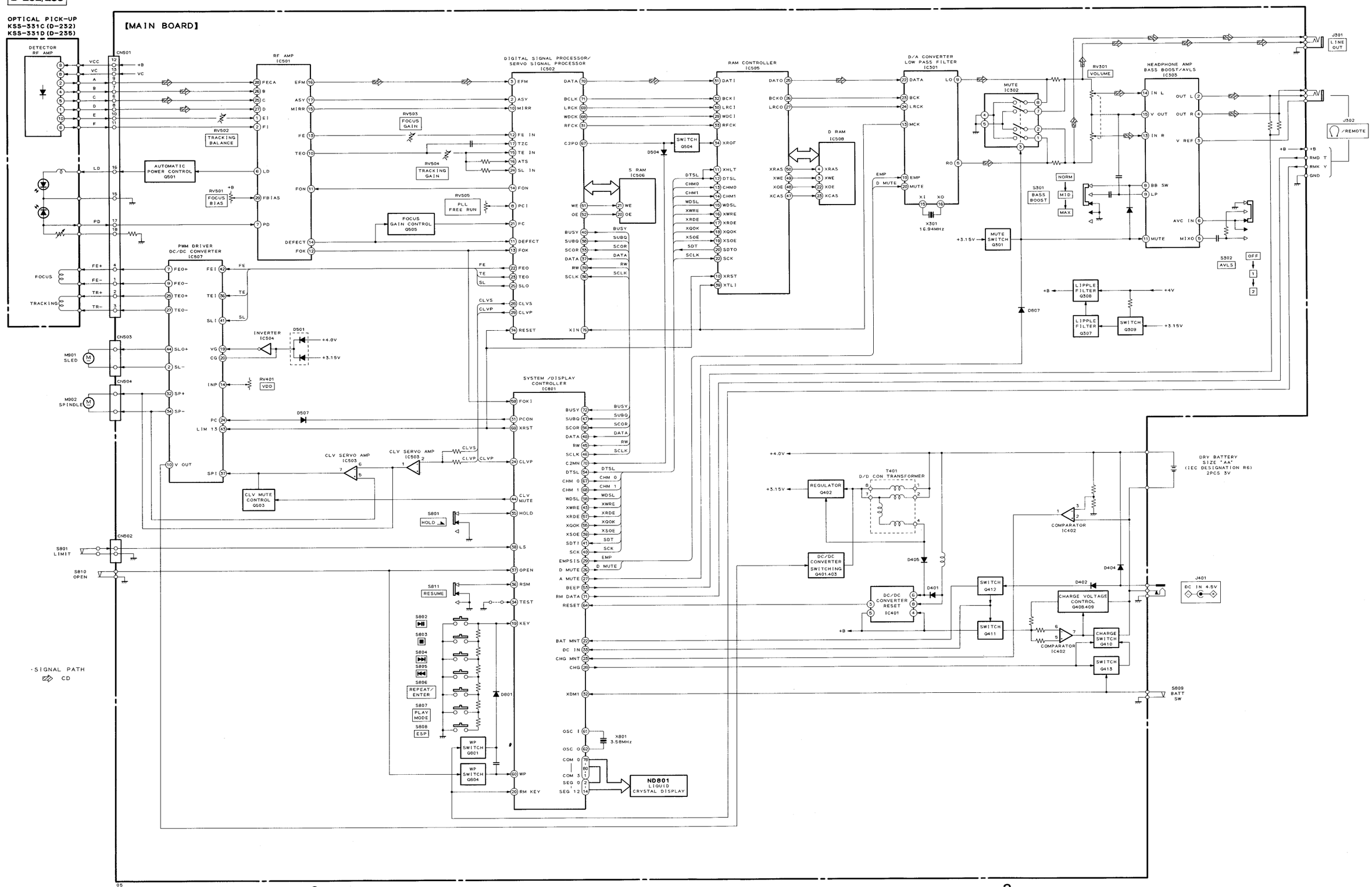

1-2. PRINTED WIRING BOARDS

D-232

- **Semiconductor Location**

Ref. No.	Location
D101	G-10
D201	G-10
D301	F-10
D303	G-10
D307	H-9
D308	G-10
D309	F-9
D401	C-16
D402	B-15
D403	D-14
D404	B-15
D405	F-8(TYPE B, C)
D405	E-16(TYPE A)
D501	B-17
D502	B-17
D503	B-17
D504	H-16
D506	B-17
D507	C-17
D508	E-17
D509	G-16
D801	H-16
D802	H-16
D803	H-14
IC301	F-9
IC302	F-13
IC303	G-10
IC401	D-16
IC402	C-16
IC501	G-5
IC502	F-17
IC503	D-17
IC504	B-17
IC505	H-6
IC506	F-16
IC507	H-7
IC508	C-18
IC801	H-17
Q301	F-10
Q307	H-9
Q308	H-14
Q309	H-15
Q401	G-15
Q402	G-8
Q403	G-15
Q408	C-15
Q409	C-15
Q410	D-15
Q411	C-16
Q412	C-16
Q413	D-15
Q501	F-18
Q503	D-18
Q504	H-16
Q505	F-18
Q801	H-16
Q804	H-19

Note:

- ○——— : parts extracted from the component side.
- ● : Through hole.
- △ : internal component.
- ▒ : Pattern from the side which enables seeing.

(The other layers' patterns are not indicated.)

Caution:	
Pattern face side: (Side B)	Parts on the pattern face side seen from the pattern face are indicated.
Parts face side: (Side A)	Parts on the parts face side seen from the parts face are indicated.

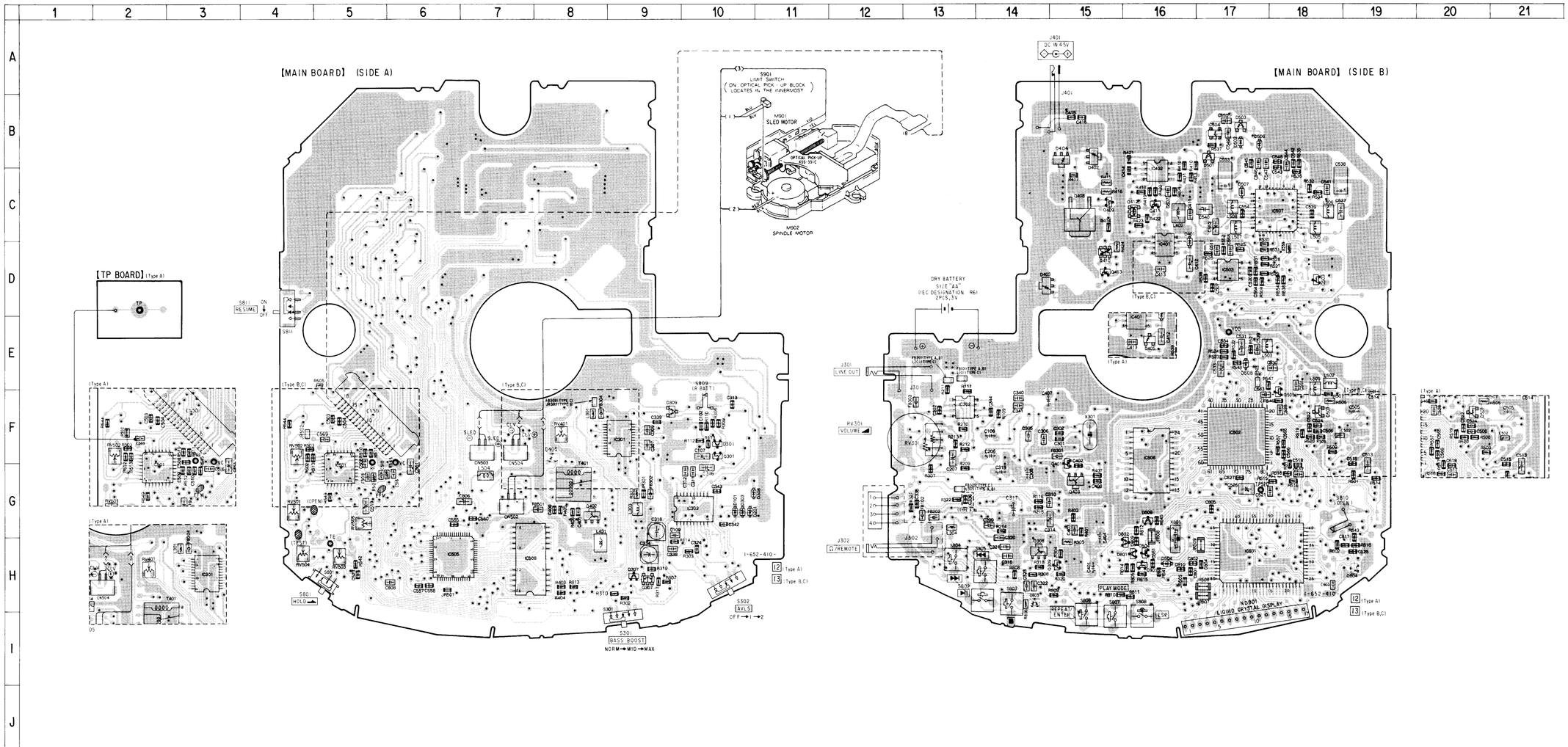

1-3. SCHEMATIC DIAGRAM

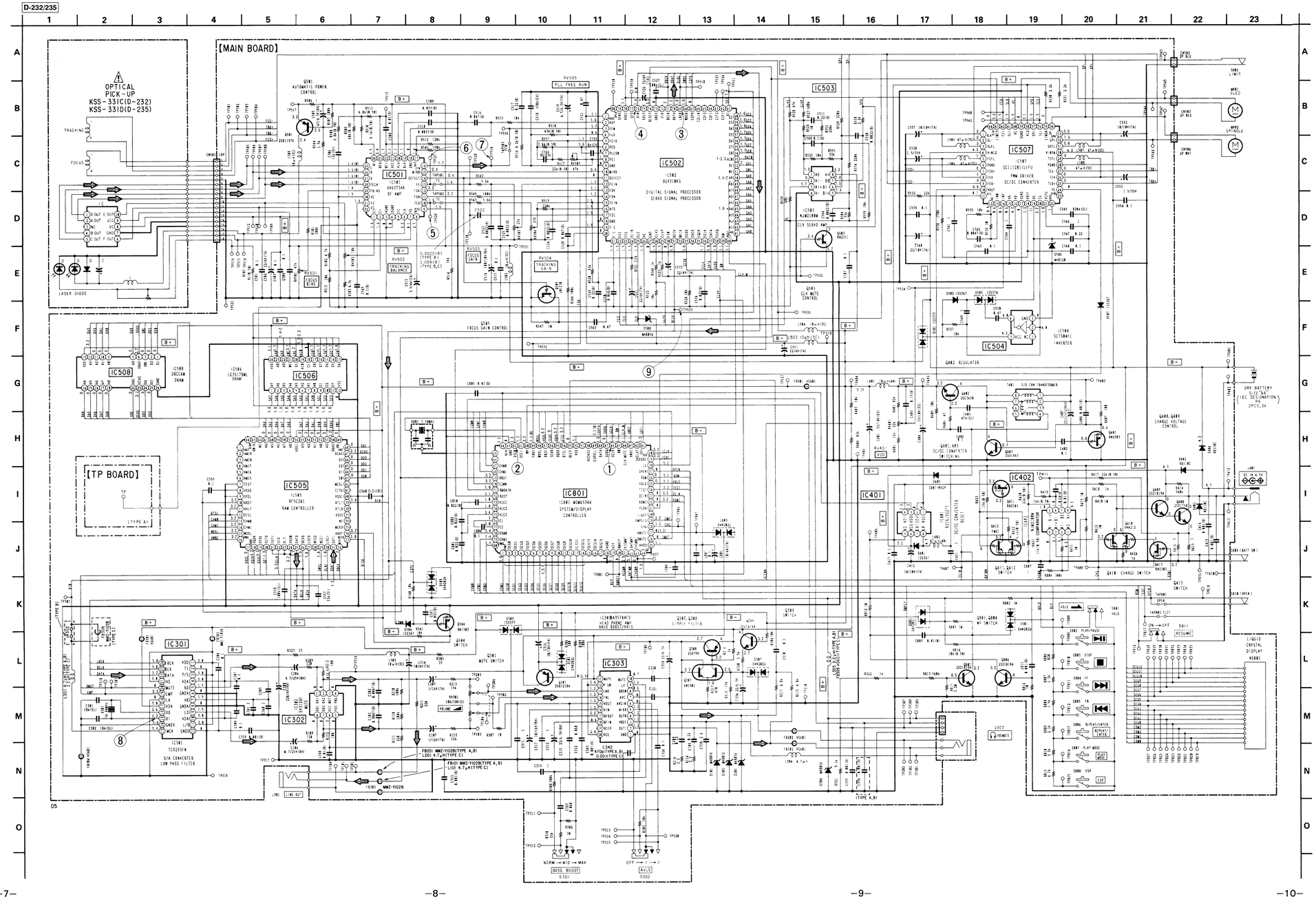

Note:

- All capacitors are in μF unless otherwise noted. pF: μμF 50 WV or less are not indicated except for electrolytics and tantalums.
- All resistors are in Ω and ¼ W or less unless otherwise specified.
- △ : internal component.

Note:	Note:
The components identified by mark △ or dotted line with mark △ are critical for safety. Replace only with part number specified.	Les composants identifiés par une marque △ sont critiques pour la sécurité. Ne les remplacer que par une pièce portant le numéro spécifié.

- B+ : B + Line.
- : panel designation.
- : adjustment for repair.
- Power voltage is dc 4.5 V and fed with regulated dc power supply from external power voltage jack.
- Voltages and waveforms are dc with respect to ground under playing back conditions in service mode.
  no mark : PLAY
  ( ) : STOP
- Voltages are taken with a VOM (10 MΩ/V).
  Voltage variations may be noted due to normal production tolerances.
- Circled numbers refer to waveforms.
- Signal path.
  ⇨ : CD

1-4. PRINTED WIRING BOARDS

D-235

- **Semiconductor Location**

Ref. No.	Location
D101	G-10
D201	G-10
D301	F-10
D303	G-10
D307	H-9
D308	G-10
D309	F-9
D401	C-16
D402	B-15
D403	D-14
D404	B-15
D405	F-8(TYPE B)
D405	E-16(TYPE A)
D501	B-17
D502	B-17
D503	B-17
D504	H-16
D506	B-17
D507	C-17
D508	E-17
D509	G-16
D801	H-16
D802	H-16
D803	H-14
IC301	F-9
IC302	F-13
IC303	G-10
IC401	D-16
IC402	C-16
IC501	G-5
IC502	F-17
IC503	D-17
IC504	B-17
IC505	H-6
IC506	F-16
IC507	H-7
IC508	C-18
IC801	H-17
Q301	F-10
Q307	H-9
Q308	H-14
Q309	H-15
Q401	G-15
Q402	G-8
Q403	G-15
Q408	C-15
Q409	C-15
Q410	D-15
Q411	C-16
Q412	C-16
Q413	D-15
Q501	F-18
Q503	D-18
Q504	H-16
Q505	F-18
Q801	H-16
Q804	H-19

Note:

- ○——— : parts extracted from the component side.
- ● : Through hole.
- △ : internal component.
- ····· : Pattern from the side which enables seeing.

(The other layers' patterns are not indicated.)

Caution:

Pattern face side: (Side B)	Parts on the pattern face side seen from the pattern face are indicated.
Parts face side: (Side A)	Parts on the parts face side seen from the parts face are indicated.

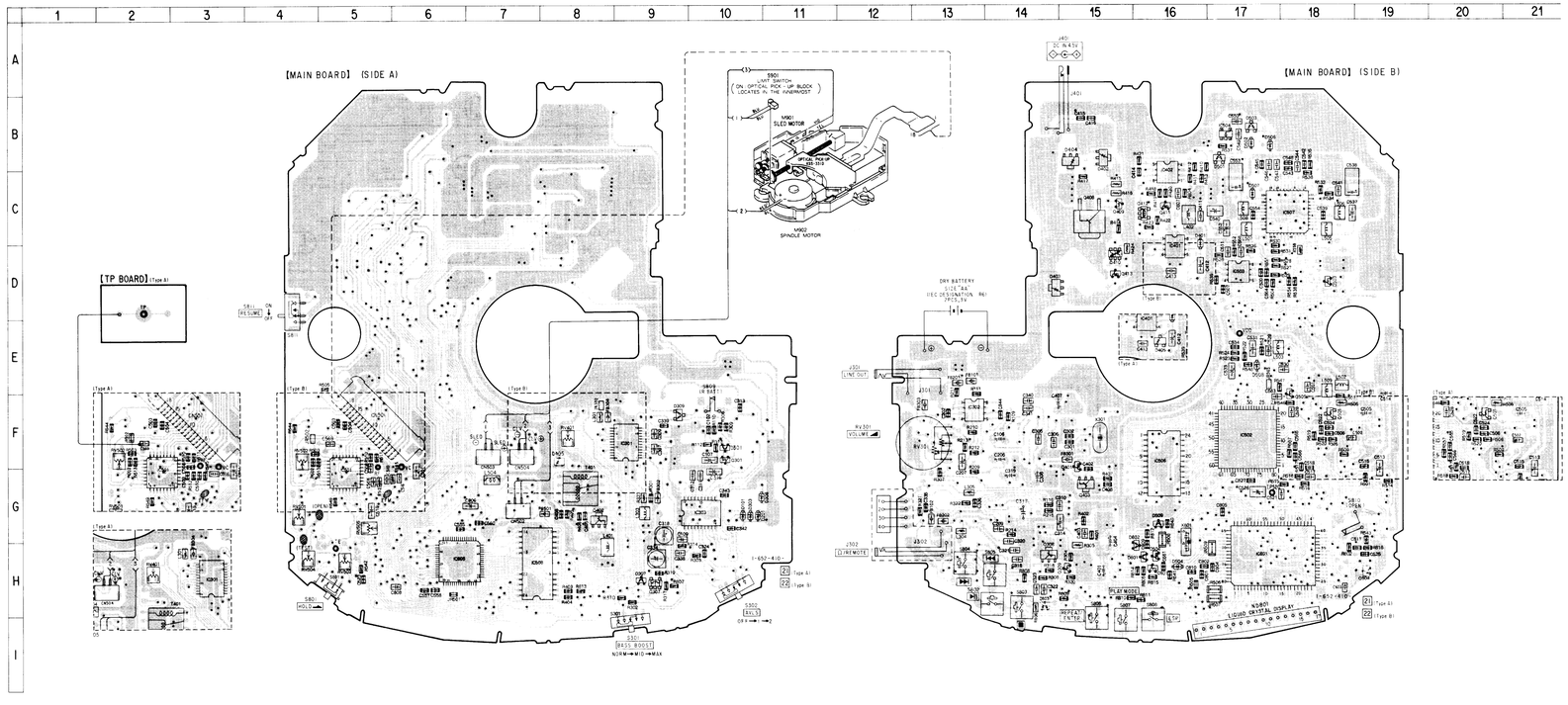

MAIN

1-5. ELECTRICAL PARTS LIST

NOTE:

- Due to standardization, replacements in the parts list may be different from the parts specified in the diagrams or the components used on the set.
- -XX and -X mean standardized parts, so they may have some difference from the original one.
- RESISTORS
  All resistors are in ohms.
  METAL:Metal-film resistor.
  METAL OXIDE: Metal oxide-film resistor.
  F:nonflammable
- Items marked "*" are not stocked since they are seldom required for routine service. Some delay should be anticipated when ordering these items.
- SEMICONDUCTORS
  In each case, u:μ, for example:
  uA..: μA.. uPA..: μPA..
  uPB..: μPB.. uPC..: μPC.. uPD..: μPD..
- CAPACITORS
  uF: μF
- COILS
  uH: μH

When indicating parts by reference number, please include the board.

Ref. No.	Part No.	Description			Remark
	A-3276-372-A	MAIN BOARD, COMPLETE ********** (D-232:US,Canadian,E)			
	A-3276-500-A	MAIN BOARD, COMPLETE (D-232:UK) **********			
	A-3276-603-A	MAIN BOARD, COMPLETE (D-235) **********			
	A-3276-759-A	MAIN BOARD, COMPLETE ********** (D-232:AEP,German,Australian)			
	4-964-898-01	TERMINAL BOARD, BATTERY			
	4-964-899-01	HOLDER (LCD)			
		< CAPACITOR >			
C102	1-162-968-11	CERAMIC CHIP	0.0047uF	10%	50V
C106	1-126-163-11	ELECT	4.7uF	20%	50V
C107	1-135-091-00	TANTAL. CHIP	1uF	20%	16V
C109	1-164-222-11	CERAMIC CHIP	0.22uF		25V
C202	1-162-968-11	CERAMIC CHIP	0.0047uF	10%	50V
C206	1-126-163-11	ELECT	4.7uF	20%	50V
C207	1-135-091-00	TANTAL. CHIP	1uF	20%	16V
C209	1-164-222-11	CERAMIC CHIP	0.22uF		25V
C301	1-162-944-11	CERAMIC CHIP	18PF	5%	50V
C302	1-162-944-11	CERAMIC CHIP	18PF	5%	50V
C305	1-164-346-11	CERAMIC CHIP	1uF		16V
C306	1-163-038-00	CERAMIC CHIP	0.1uF		25V
C307	1-163-038-00	CERAMIC CHIP	0.1uF		25V
C308	1-124-434-00	ELECT	220uF	20%	4V
C309	1-163-038-00	CERAMIC CHIP	0.1uF		25V
C310	1-163-038-00	CERAMIC CHIP	0.1uF		25V
C311	1-164-346-11	CERAMIC CHIP	1uF		16V
C312	1-164-346-11	CERAMIC CHIP	1uF		16V
C313	1-162-964-11	CERAMIC CHIP	0.001uF	10%	50V
C314	1-135-201-11	TANTALUM CHIP	10uF	20%	4V
C315	1-164-346-11	CERAMIC CHIP	1uF		16V
C316	1-104-851-11	TANTAL. CHIP	10uF	20%	10V
C317	1-126-157-11	ELECT	10uF	20%	16V
C318	1-124-778-00	ELECT CHIP	22uF	20%	6.3V
C319	1-126-153-11	ELECT	22uF	20%	6.3V
C320	1-164-346-11	CERAMIC CHIP	1uF		16V
C321	1-164-346-11	CERAMIC CHIP	1uF		16V
C322	1-163-036-00	CERAMIC CHIP	0.068uF		50V
C323	1-163-036-00	CERAMIC CHIP	0.068uF		50V
C324	1-164-360-11	CERAMIC CHIP	0.1uF		16V
C334	1-124-778-00	ELECT CHIP	22uF	20%	6.3V
C335	1-162-964-11	CERAMIC CHIP	0.001uF	10%	50V
C336	1-162-964-11	CERAMIC CHIP	0.001uF	10%	50V (TYPE A,B)
C338	1-164-505-11	CERAMIC CHIP	2.2uF		16V
C339	1-162-964-11	CERAMIC CHIP	0.001uF	10%	50V
C340	1-164-346-11	CERAMIC CHIP	1uF		16V
C341	1-164-346-11	CERAMIC CHIP	1uF		16V
C342	1-162-964-11	CERAMIC CHIP	0.001uF	10%	50V (TYPE C)
C342	1-164-362-11	CERAMIC CHIP	470PF	5%	50V (TYPE A,B)
C343	1-162-964-11	CERAMIC CHIP	0.001uF	10%	50V
C344	1-162-970-11	CERAMIC CHIP	0.01uF	10%	25V
C401	1-127-561-11	ELECT(SOLID)	33uF	20%	10V
C402	1-164-360-11	CERAMIC CHIP	0.1uF		16V
C403	1-164-492-11	CERAMIC CHIP	0.15uF	10%	16V
C404	1-127-561-11	ELECT(SOLID)	33uF	20%	10V
C405	1-162-949-11	CERAMIC CHIP	47PF	5%	50V
C406	1-164-360-11	CERAMIC CHIP	0.1uF		16V
C407	1-128-241-11	ELECT	220uF	20%	10V
C408	1-162-964-11	CERAMIC CHIP	0.001uF	10%	50V
C411	1-164-346-11	CERAMIC CHIP	1uF		16V
C412	1-104-851-11	TANTAL. CHIP	10uF	20%	10V
C413	1-163-038-00	CERAMIC CHIP	0.1uF		25V
C414	1-162-970-11	CERAMIC CHIP	0.01uF	10%	25V
C415	1-162-964-11	CERAMIC CHIP	0.001uF	10%	50V
C416	1-162-964-11	CERAMIC CHIP	0.001uF	10%	50V
C501	1-163-038-00	CERAMIC CHIP	0.1uF		25V
C502	1-104-847-11	TANTAL. CHIP	22uF	20%	4V
C503	1-164-360-11	CERAMIC CHIP	0.1uF		16V
C504	1-164-360-11	CERAMIC CHIP	0.1uF		16V
C505	1-126-154-11	ELECT	47uF	20%	6.3V

Ref. No.	Part No.	Description		Remark	
C506	1-162-942-11	CERAMIC CHIP	12PF	5%	50V
C507	1-164-360-11	CERAMIC CHIP	0.1uF		16V
C508	1-162-970-11	CERAMIC CHIP	0.01uF	10%	25V
C509	1-164-677-11	CERAMIC CHIP	0.033uF	10%	16V
C510	1-162-967-11	CERAMIC CHIP	0.0033uF	10%	50V
C511	1-164-489-11	CERAMIC CHIP	0.22uF	10%	16V
C513	1-135-180-21	TANTALUM CHIP	3.3uF	20%	6.3V
C514	1-124-584-00	ELECT	100uF	20%	10V
C515	1-164-360-11	CERAMIC CHIP	0.1uF		16V
C516	1-163-809-11	CERAMIC CHIP	0.047uF	10%	25V
C517	1-164-489-11	CERAMIC CHIP	0.22uF	10%	16V
C518	1-164-217-11	CERAMIC CHIP	150PF	5%	50V
C519	1-135-181-21	TANTALUM CHIP	4.7uF	20%	6.3V
C520	1-162-966-11	CERAMIC CHIP	0.0022uF	10%	50V
C521	1-164-005-11	CERAMIC CHIP	0.47uF		25V
C522	1-162-966-11	CERAMIC CHIP	0.0022uF	10%	50V (TYPE A)
C522	1-164-344-11	CERAMIC CHIP	0.068uF	10%	25V (TYPE B, C)
C523	1-162-966-11	CERAMIC CHIP	0.0022uF	10%	50V
C524	1-162-966-11	CERAMIC CHIP	0.0022uF	10%	50V
C525	1-162-966-11	CERAMIC CHIP	0.0022uF	10%	50V
C526	1-135-318-11	TANTAL. CHIP	33uF	20%	4V
C527	1-162-953-11	CERAMIC CHIP	100PF	5%	50V
C528	1-163-809-11	CERAMIC CHIP	0.047uF	10%	25V
C529	1-164-489-11	CERAMIC CHIP	0.22uF	10%	16V
C530	1-164-344-11	CERAMIC CHIP	0.068uF	10%	25V
C531	1-104-847-11	TANTAL. CHIP	22uF	20%	4V
C533	1-104-847-11	TANTAL. CHIP	22uF	20%	4V
C534	1-164-227-11	CERAMIC CHIP	0.022uF	10%	25V
C537	1-104-851-11	TANTAL. CHIP	10uF	20%	10V
C538	1-128-038-11	ELECT CHIP	1.5uF		35V
C539	1-164-360-11	CERAMIC CHIP	0.1uF		16V
C540	1-104-852-11	TANTAL. CHIP	22uF	20%	10V
C541	1-164-346-11	CERAMIC CHIP	1uF		16V
C542	1-162-968-11	CERAMIC CHIP	0.0047uF	10%	50V
C543	1-164-360-11	CERAMIC CHIP	0.1uF		16V
C544	1-164-346-11	CERAMIC CHIP	1uF		16V
C545	1-164-473-11	CERAMIC CHIP	820PF	5%	50V
C546	1-164-346-11	CERAMIC CHIP	1uF		16V
C547	1-164-222-11	CERAMIC CHIP	0.22uF		25V
C548	1-164-360-11	CERAMIC CHIP	0.1uF		16V
C549	1-164-346-11	CERAMIC CHIP	1uF		16V
C550	1-164-005-11	CERAMIC CHIP	0.47uF		25V
C551	1-104-847-11	TANTAL. CHIP	22uF	20%	4V
C552	1-104-851-11	TANTAL. CHIP	10uF	20%	10V
C553	1-128-038-11	ELECT CHIP	1.5uF		35V
C554	1-164-360-11	CERAMIC CHIP	0.1uF		16V
C555	1-164-360-11	CERAMIC CHIP	0.1uF		16V
C557	1-162-947-11	CERAMIC CHIP	33PF	5%	50V
C558	1-162-953-11	CERAMIC CHIP	100PF	5%	50V
C560	1-162-970-11	CERAMIC CHIP	0.01uF	10%	25V
C561	1-164-677-11	CERAMIC CHIP	0.033uF	10%	16V
C563	1-164-005-11	CERAMIC CHIP	0.47uF		25V
C564	1-162-966-11	CERAMIC CHIP	0.0022uF	10%	50V
C565	1-162-913-11	CERAMIC CHIP	8PF	0.5PF	50V
C566	1-162-913-11	CERAMIC CHIP	8PF	0.5PF	50V
C568	1-164-004-11	CERAMIC CHIP	0.1uF	10%	25V
C569	1-164-004-11	CERAMIC CHIP	0.1uF	10%	25V
C801	1-164-227-11	CERAMIC CHIP	0.022uF	10%	25V
C802	1-164-227-11	CERAMIC CHIP	0.022uF	10%	25V
C803	1-164-360-11	CERAMIC CHIP	0.1uF		16V
C804	1-164-360-11	CERAMIC CHIP	0.1uF		16V
C805	1-162-970-11	CERAMIC CHIP	0.01uF	10%	25V
C806	1-135-201-11	TANTALUM CHIP	10uF	20%	4V
C807	1-164-346-11	CERAMIC CHIP	1uF		16V
C808	1-164-346-11	CERAMIC CHIP	1uF		16V
C809	1-162-970-11	CERAMIC CHIP	0.01uF	10%	25V
C810	1-164-227-11	CERAMIC CHIP	0.022uF	10%	25V
C811	1-162-964-11	CERAMIC CHIP	0.001uF	10%	50V

< CONNECTOR >

CN501	1-566-534-11	CONNECTOR, FPC (ZIF) 18P
* CN502	1-695-320-51	PIN, CONNECTOR (1.5MM) (SMD) 2P
* CN503	1-695-320-31	PIN, CONNECTOR (1.5MM) (SMD) 2P
* CN504	1-695-320-21	PIN, CONNECTOR (1.5MM) (SMD) 2P

< DIODE >

D101	8-719-422-46	DIODE	MA8056
D201	8-719-422-46	DIODE	MA8056
D301	8-719-941-86	DIODE	DAN202U
D303	8-719-422-46	DIODE	MA8056
D307	8-719-941-86	DIODE	DAN202U
D308	8-719-422-46	DIODE	MA8056
D309	8-719-049-11	DIODE	1SS377-TE85L
D401	8-719-049-09	DIODE	1SS367
D402	8-719-975-33	DIODE	RB110C
D403	8-719-975-33	DIODE	RB110C
D404	8-719-975-33	DIODE	RB110C
D405	8-719-938-72	DIODE	SB01-05CP
D501	8-719-049-11	DIODE	1SS377-TE85L
D502	8-719-049-09	DIODE	1SS367
D503	8-719-049-10	DIODE	1SS374-TE85L
D504	8-719-049-09	DIODE	1SS367
D506	8-719-977-34	DIODE	DTZ12
D507	8-719-049-09	DIODE	1SS367
D508	8-719-422-46	DIODE	MA8056
D509	8-719-941-86	DIODE	DAN202U

REVISED

MAIN

Ref. No.	Part No.	Description	Remark
D801	8-719-941-86	DIODE DAN202U	
D802	8-719-941-09	DIODE DAP202U	
D803	8-719-941-86	DIODE DAN202U	
		< FERRITE BEAD >	
FB101	1-550-907-21	BEAD, FERRITE (CHIP) (TYPE A, B)	
FB102	1-414-233-21	INDUCTOR, FERRITE BEAD	
FB201	1-550-907-21	BEAD, FERRITE (CHIP) (TYPE A, B)	
FB202	1-414-233-21	INDUCTOR, FERRITE BEAD	
FB301	1-414-233-21	INDUCTOR, FERRITE BEAD	
FB302	1-550-907-21	BEAD, FERRITE (CHIP)	
FB303	1-550-907-21	BEAD, FERRITE (CHIP)	
FB304	1-414-233-21	INDUCTOR, FERRITE BEAD	
FB308	1-550-907-21	BEAD, FERRITE (CHIP) (TYPE C)	
FB309	1-414-233-21	INDUCTOR, FERRITE BEAD (TYPE C)	
FB501	1-414-233-21	INDUCTOR, FERRITE BEAD	
		< IC >	
IC301	8-759-263-31	IC TC9293FN-EL	
IC302	8-759-179-65	IC BA312F-T1	
IC303	8-759-285-22	IC BA3574AFS	
IC401	8-759-176-73	IC RS5RJ32271-T1	
IC402	8-759-710-55	IC NJM2100M	
IC501	8-759-293-60	IC BA6373AK	
IC502	8-759-293-61	IC BU9310BKS	
IC503	8-759-710-55	IC NJM2100M	
IC504	8-759-031-84	IC SC7S04F	
IC505	8-759-179-71	IC RF5C241	
IC506	8-759-804-88	IC LC3517BML-15	
IC507	8-759-263-14	IC SC111281LFU	
IC508	8-759-264-82	IC DRCC4M	
IC801	8-759-327-76	IC MSM65344-017GS-V1K	
		< JACK >	
J301	1-565-287-41	JACK (LINE OUT)	
J302	1-580-680-11	JACK (Ω/REMOTE)	
J401	1-691-099-41	JACK, DC (POLARITY UNIFIED TYPE) (DC IN 4.5V)	
		< JUMPER RESISTOR >	
JR301	1-216-295-00	CONDCTOR, CHIP	
JR302	1-216-295-00	CONDCTOR, CHIP (TYPE B)	
JR501	1-216-864-11	METAL CHIP 0 5% 1/16W	
JR502	1-216-864-11	METAL CHIP 0 5% 1/16W	
JR503	1-216-864-11	METAL CHIP 0 5% 1/16W	
JR505	1-216-864-11	METAL CHIP 0 5% 1/16W	
JR506	1-216-296-00	METAL CHIP 0 5% 1/8W	
JR507	1-216-296-00	METAL CHIP 0 5% 1/8W	
JR508	1-216-296-00	METAL CHIP 0 5% 1/8W	
JR509	1-216-296-00	METAL CHIP 0 5% 1/8W	
		< COIL >	
L101	1-412-002-31	INDUCTOR CHIP 4.7uH (TYPE C)	
L201	1-412-002-31	INDUCTOR CHIP 4.7uH (TYPE C)	
L301	1-410-999-31	INDUCTOR CHIP 3.3uH (TYPE C)	
L301	1-412-002-31	INDUCTOR CHIP 4.7uH (TYPE A, B)	
L303	1-414-398-11	INDUCTOR 10uH	
L304	1-412-002-31	INDUCTOR CHIP 4.7uH	
L305	1-410-997-31	INDUCTOR CHIP 2.2uH (TYPE A, B)	
L401	1-414-431-11	INDUCTOR 10uH	
L402	1-412-630-51	INDUCTOR 47uH	
L502	1-414-398-11	INDUCTOR 10uH	
L503	1-414-398-11	INDUCTOR 10uH	
L504	1-414-398-11	INDUCTOR 10uH	
L505	1-414-402-11	INDUCTOR 47uH	
L506	1-414-402-11	INDUCTOR 47uH	
L507	1-414-402-11	INDUCTOR 47uH	
L508	1-414-402-11	INDUCTOR 47uH	
L509	1-414-398-11	INDUCTOR 10uH	
		< FLUORESCENT INDICATOR >	
ND801	1-810-521-11	DISPLAY PANEL, LIQUID CRYSTAL	
		< TRANSISTOR >	
Q301	8-729-230-60	TRANSISTOR 2SA1586-YG	
Q307	8-729-402-13	TRANSISTOR XN1501	
Q308	8-729-101-07	TRANSISTOR 2SB798-DL	
Q309	8-729-230-63	TRANSISTOR 2SC4116-YG	
Q401	8-729-014-18	TRANSISTOR RN2303-TE85L	
Q402	8-729-022-67	TRANSISTOR 2SC3650-TD	
Q403	8-729-923-36	TRANSISTOR 2SD1963-Q.R	
Q408	8-729-922-34	TRANSISTOR 2SD1758F5-QR	
Q409	8-729-230-63	TRANSISTOR 2SC4116-YG	
Q410	8-729-403-02	TRANSISTOR XN4212	
Q411	8-729-014-18	TRANSISTOR RN2303-TE85L	
Q412	8-729-920-56	TRANSISTOR FMG1	
Q413	8-729-014-18	TRANSISTOR RN2303-TE85L	
Q501	8-729-904-86	TRANSISTOR 2SB1197K-Q	
Q503	8-729-014-34	TRANSISTOR RN2311-TE85L	
Q504	8-729-402-45	TRANSISTOR UN5212	
Q505	8-729-420-44	TRANSISTOR UN5210	
Q801	8-729-230-63	TRANSISTOR 2SC4116-YG	
Q804	8-729-230-63	TRANSISTOR 2SC4116-YG	
		< RESISTOR >	
R109	1-216-810-11	METAL CHIP 120 5% 1/16W	
R110	1-216-845-11	METAL CHIP 100K 5% 1/16W	

Ref. No.	Part No.	Description			Remark
R111	1-216-813-11	METAL CHIP	220	5%	1/16W
R112	1-216-809-11	METAL CHIP	100	5%	1/16W
R113	1-216-835-11	METAL CHIP	15K	5%	1/16W
R114	1-216-789-11	METAL CHIP	2.2	5%	1/16W
R115	1-216-831-11	METAL CHIP	6.8K	5%	1/16W
R209	1-216-810-11	METAL CHIP	120	5%	1/16W
R210	1-216-845-11	METAL CHIP	100K	5%	1/16W
R211	1-216-813-11	METAL CHIP	220	5%	1/16W
R212	1-216-809-11	METAL CHIP	100	5%	1/16W
R213	1-216-835-11	METAL CHIP	15K	5%	1/16W
R214	1-216-789-11	METAL CHIP	2.2	5%	1/16W
R215	1-216-831-11	METAL CHIP	6.8K	5%	1/16W
R302	1-216-857-11	METAL CHIP	1M	5%	1/16W
R303	1-216-833-11	METAL CHIP	10K	5%	1/16W
R304	1-216-833-11	METAL CHIP	10K	5%	1/16W
R305	1-216-013-00	METAL CHIP	33	5%	1/10W
R306	1-216-809-11	METAL CHIP	100	5%	1/16W
R307	1-216-797-11	METAL CHIP	10	5%	1/16W
R308	1-216-845-11	METAL CHIP	100K	5%	1/16W
R309	1-216-845-11	METAL CHIP	100K	5%	1/16W
R310	1-216-839-11	METAL CHIP	33K	5%	1/16W
R317	1-216-817-11	METAL CHIP	470	5%	1/16W
R318	1-216-821-11	METAL CHIP	1K	5%	1/16W
R319	1-216-835-11	METAL CHIP	15K	5%	1/16W
R320	1-216-823-11	METAL CHIP	1.5K	5%	1/16W
R321	1-218-345-11	METAL CHIP	9.1K	5%	1/16W
R322	1-216-821-11	METAL CHIP	1K	5%	1/16W
R323	1-216-013-00	METAL CHIP	33	5%	1/10W
R401	1-216-844-11	METAL CHIP	82K	5%	1/16W
R402	1-216-834-11	METAL CHIP	12K	5%	1/16W
R403	1-216-833-11	METAL CHIP	10K	5%	1/16W
R404	1-216-844-11	METAL CHIP	82K	5%	1/16W
R405	1-216-833-11	METAL CHIP	10K	5%	1/16W
R406	1-216-805-11	METAL CHIP	47	5%	1/16W
R407	1-216-809-11	METAL CHIP	100	5%	1/16W
R410	1-216-857-11	METAL CHIP	1M	5%	1/16W
R411	1-216-857-11	METAL CHIP	1M	5%	1/16W
R412	1-216-857-11	METAL CHIP	1M	5%	1/16W
R413	1-216-857-11	METAL CHIP	1M	5%	1/16W
R414	1-216-854-11	METAL CHIP	560K	5%	1/16W
R415	1-217-671-11	METAL CHIP	1	5%	1/10W
R416	1-217-671-11	METAL CHIP	1	5%	1/10W
R417	1-218-724-11	METAL CHIP	22K	0.50%	1/16W
R418	1-216-821-11	METAL CHIP	1K	5%	1/16W
R419	1-218-889-11	METAL CHIP	56K	0.50%	1/16W
R420	1-218-724-11	METAL CHIP	22K	0.50%	1/16W
R421	1-218-717-11	METAL CHIP	11K	0.50%	1/16W
R422	1-218-870-11	METAL CHIP	9.1K	0.50%	1/16W
R423	1-218-720-11	METAL CHIP	15K	0.50%	1/16W
R424	1-216-019-00	METAL CHIP	56	5%	1/10W
R501	1-216-845-11	METAL CHIP	100K	5%	1/16W
R502	1-216-829-11	METAL CHIP	4.7K	5%	1/16W
R503	1-216-829-11	METAL CHIP	4.7K	5%	1/16W
R504	1-216-839-11	METAL CHIP	33K	5%	1/16W
R505	1-211-992-11	METAL CHIP	91	0.50%	1/16W
R506	1-217-671-11	METAL CHIP	1	5%	1/10W
R507	1-216-845-11	METAL CHIP	100K	5%	1/16W
R508	1-218-867-11	METAL CHIP	6.8K	0.50%	1/16W
R509	1-218-736-11	METAL CHIP	68K	0.50%	1/16W
R510	1-218-870-11	METAL CHIP	9.1K	0.50%	1/16W
R511	1-218-867-11	METAL CHIP	6.8K	0.50%	1/16W
R512	1-216-846-11	METAL CHIP	120K	5%	1/16W
R513	1-216-833-11	METAL CHIP	10K	5%	1/16W
R514	1-216-842-11	METAL CHIP	56K	5%	1/16W
R515	1-216-833-11	METAL CHIP	10K	5%	1/16W
R516	1-218-714-11	METAL CHIP	8.2K	0.50%	1/16W
R517	1-218-724-11	METAL CHIP	22K	0.50%	1/16W
R518	1-218-886-11	METAL CHIP	43K	0.50%	1/16W
R519	1-216-849-11	METAL CHIP	220K	5%	1/16W
R520	1-216-844-11	METAL CHIP	82K	5%	1/16W
R521	1-216-837-11	METAL CHIP	22K	5%	1/16W
R522	1-216-833-11	METAL CHIP	10K	5%	1/16W
R523	1-216-821-11	METAL CHIP	1K	5%	1/16W
R524	1-216-833-11	METAL CHIP	10K	5%	1/16W
R525	1-216-833-11	METAL CHIP	10K	5%	1/16W
R526	1-216-857-11	METAL CHIP	1M	5%	1/16W
R527	1-216-855-11	METAL CHIP	680K	5%	1/16W
R528	1-216-841-11	METAL CHIP	47K	5%	1/16W
R529	1-216-849-11	METAL CHIP	220K	5%	1/16W
R530	1-216-825-11	METAL CHIP	2.2K	5%	1/16W
R531	1-216-825-11	METAL CHIP	2.2K	5%	1/16W
R532	1-216-837-11	METAL CHIP	22K	5%	1/16W
R534	1-216-847-11	METAL CHIP	150K	5%	1/16W
R535	1-216-833-11	METAL CHIP	10K	5%	1/16W
R536	1-216-857-11	METAL CHIP	1M	5%	1/16W
R537	1-216-833-11	METAL CHIP	10K	5%	1/16W
R538	1-216-825-11	METAL CHIP	2.2K	5%	1/16W
R539	1-216-843-11	METAL CHIP	68K	5%	1/16W
R540	1-216-833-11	METAL CHIP	10K	5%	1/16W
R541	1-216-833-11	METAL CHIP	10K	5%	1/16W
R542	1-216-830-11	METAL CHIP	5.6K	5%	1/16W
R543	1-216-830-11	METAL CHIP	5.6K	5%	1/16W
R544	1-216-823-11	METAL CHIP	1.5K	5%	1/16W
R545	1-216-847-11	METAL CHIP	150K	5%	1/16W
R546	1-216-845-11	METAL CHIP	100K	5%	1/16W
R547	1-216-857-11	METAL CHIP	1M	5%	1/16W
R548	1-216-821-11	METAL CHIP	1K	5%	1/16W

MAIN

Ref. No.	Part No.	Description				Remark
R549	1-216-845-11	METAL CHIP	100K	5%	1/16W	
R551	1-216-839-11	METAL CHIP	33K	5%	1/16W	
R552	1-216-849-11	METAL CHIP	220K	5%	1/16W	
R554	1-216-849-11	METAL CHIP	220K	5%	1/16W	
R557	1-218-705-11	METAL CHIP	3.6K	0.50%	1/16W	
R559	1-216-833-11	METAL CHIP	10K	5%	1/16W	
R802	1-216-857-11	METAL CHIP	1M	5%	1/16W	
R804	1-216-845-11	METAL CHIP	100K	5%	1/16W	
R805	1-216-857-11	METAL CHIP	1M	5%	1/16W	
R806	1-216-820-11	METAL CHIP	820	5%	1/16W	
R807	1-216-822-11	METAL CHIP	1.2K	5%	1/16W	
R808	1-216-823-11	METAL CHIP	1.5K	5%	1/16W	
R809	1-216-825-11	METAL CHIP	2.2K	5%	1/16W	
R810	1-216-827-11	METAL CHIP	3.3K	5%	1/16W	
R811	1-216-829-11	METAL CHIP	4.7K	5%	1/16W	
R812	1-216-857-11	METAL CHIP	1M	5%	1/16W	
R813	1-216-854-11	METAL CHIP	560K	5%	1/16W	
R814	1-218-716-11	METAL CHIP	10K	0.50%	1/16W	
R815	1-216-861-11	METAL CHIP	2.2M	5%	1/16W	
R816	1-216-857-11	METAL CHIP	1M	5%	1/16W	

< VARIABLE RESISTOR >

RV301	1-223-382-11	RES, VAR, CARBON 10K/10K (VOLUME)	
RV401	1-223-578-11	RES, ADJ, METAL GLAZE 22K	
RV501	1-223-612-11	RES, ADJ, METAL GLAZE 47K	
RV502	1-223-695-11	RES, ADJ, METAL GLAZE 10K	
RV503	1-223-578-11	RES, ADJ, METAL GLAZE 22K	
RV504	1-223-578-11	RES, ADJ, METAL GLAZE 22K	
RV505	1-223-612-11	RES, ADJ, METAL GLAZE 47K	

< SWITCH >

S301	1-692-605-11	SWITCH, SLIDE (BASS BOOST)	
S302	1-692-605-11	SWITCH, SLIDE (AVLS)	
S801	1-572-922-11	SWITCH, SLIDE (HOLD)	
S802	1-572-198-11	SWITCH, KEYBOARD (▶II)	
S803	1-572-198-11	SWITCH, KEYBOARD (■)	
S804	1-572-198-11	SWITCH, KEYBOARD (▶▶I)	
S805	1-572-198-11	SWITCH, KEYBOARD (I◀◀)	
S806	1-572-198-11	SWITCH, KEYBOARD (REPEAT/ENTER)	
S807	1-572-198-11	SWITCH, KEYBOARD (PLAY MODE)	
S808	1-572-198-11	SWITCH, KEYBOARD (ESP)	
S809	1-692-532-21	SWITCH, PUSH (1 KEY) (BATT SW)	
S810	1-570-953-11	SWITCH, PUSH (1 KEY) (OPEN)	
S811	1-572-922-11	SWITCH, SLIDE (RESUME)	

< TRANSFORMER >

T401	1-423-636-11	TRANSFORMER, DC-DC CONVERTER	

< VIBRATOR >

X301	1-579-345-11	VIBRATOR, CERAMIC (16.94 MHz)	
X801	1-579-956-11	VIBRATOR, CERAMIC (3.58 MHz)	

REVISED

1-6. EXPLODED VIEWS

D-232/235

Page	Ref. No.	Former Type		New Type	
		Part No.	Description	Part No.	Description
27	18	A-3276-372-A	MAIN BOARD, COMPLETE (D-232:US, CND, AEP, E, G, AUS)	A-3276-372-A	MAIN BOARD, COMPLETE (D-232:US, E, CND)
		A-3276-500-A	MAIN BOARD, COMPLETE (D-232:UK)	A-3276-500-A	MAIN BOARD, COMPLETE (D-232:UK)
		A-3276-603-A	MAIN BOARD, COMPLETE (D-235)	A-3276-603-A	MAIN BOARD, COMPLETE (D-235)
				A-3276-759-A	MAIN BOARD, COMPLETE (D-232:AEP, G, AUS)

~~2. CORRECTION~~

~~2-1. EXPLODED VIEWS~~

Page	Ref. No.	Incorrect		Correct	
		Part No.	Description	Part No.	Description
27	18	A-3276-372-A	MAIN BOARD, COMPLETE (D-232:US, CND, AEP, E, G, AUS/D-235)	A-3276-372-A	MAIN BOARD, COMPLETE (D-232:US, CND, AEP, E, G, AUS)
		A-3276-500-A	MAIN BOARD, COMPLETE (D-232:UK)	A-3276-500-A	MAIN BOARD, COMPLETE (D-232:UK)
				A-3276-603-A	MAIN BOARD, COMPLETE (D-235)

~~2-2. ELECTRICAL PARTS LIST~~

Page	Ref. No.	Incorrect		Correct	
		Part No.	Description	Part No.	Description
31	IC506	8-759-264-81	IC LH5116ZE	8-759-822-79	IC LC3517RM-15

NOTE:

- Abbreviation
  CND : Canadian
  G : German
  AUS : Australian

English
95C0596-1
Printed in Japan

9-959-621-81

Sony Corporation
Consumer A&V Products Company
Personal A&V Products Div.

Published by Home A&V Products Div.
Quality Engineering Dept.