D-5500

SERVICE MANUAL

AEP Model
UK Model
E Model

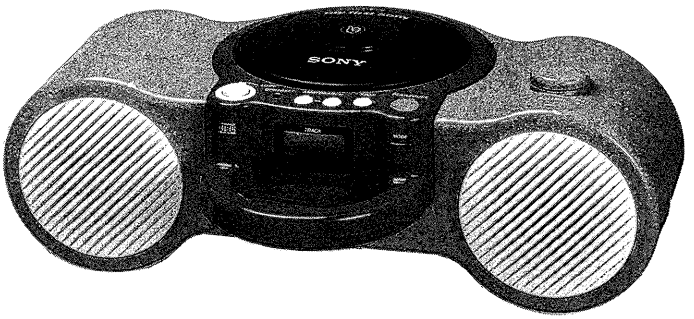

Model Name Using Similar Mechanism	CFD-20S E model
	CFD-20L AEP, UK model
Optical Pickup Block Type	KSM-2101BAM

SPECIFICATIONS

Input
MIC: monaural minijack
Output
PHONES: stereo minijack
Power requirements
9 V DC ⎓, R14 x 6
Power consumption
5 W
Battery life
Sony alkaline AM2 (N):
approx. 4 h
Sony SUM-2 (NS): approx. 2 h

Dimensions
Approx. 409 x 151 x 272 mm
(w/h/d)
($16^1/_8$ x 6 x $10^3/_4$ inches) incl.
projecting parts and controls
Mass
Approx. 1.8 kg (3 lb. 14 oz.)
not incl. batteries

Design and specifications
subject to change without
notice.

CD COMPACT PLAYER

SONY®

TABLE OF CONTENTS

Section	Title	Page
1.	**GENERAL**	3
2.	**ELECTRICAL ADJUSTMENTS**	4
3.	**IC PIN DESCRIPTION**	6
4.	**DIAGRAMS**	
4-1.	Block Diagram	8
4-2.	Circuit Boards Location	10
4-3.	Semiconductor Lead Layouts	10
4-4.	Printed Wiring Boards	10
4-5.	Schematic Diagrams	13
4-6.	IC Block Diagrams	18
5.	**EXPLODED VIEWS**	
5-1.	General Section (1)	20
5-2.	General Section (2)	21
5-3.	Optical Pick-up Section (KSM-2101BAM)	22
6.	**ELECTRICAL PARTS LIST**	23

SAFETY - RELATED COMPONENT WARNING!!

COMPONENTS IDENTIFIED BY MARK ⚠ OR DOTTED LINE WITH MARK ⚠ ON THE SCHEMATIC DIAGRAMS AND IN THE PARTS LIST ARE CRITICAL TO SAFE OPERATION. REPLACE THESE COMPONENTS WITH SONY PARTS WHOSE PART NUMBERS APPEAR AS SHOWN IN THIS MANUAL OR IN SUPPLEMENTS PUBLISHED BY SONY.

SERVICING NOTES

NOTES ON HANDLING THE OPTICAL PICK-UP BLOCK OR BASE UNIT

The laser diode in the optical pick-up block may suffer electrostatic break down because of the potential difference generated by the charged electrostatic load, etc. on clothing and the human body.
During repair, pay attention to electrostatic break down and also use the procedure in the printed matter which is included in the repair parts.
The flexible board is easily damaged and should be handled with care.

NOTES ON LASER DIODE EMISSION CHECK

The laser beam on this model is concentrated so as to be focused on the disc reflective surface by the objective lens in the optical pick-up block. Therefore, when checking the laser diode emission, observe more than 30cm away from the objective lens.

CHUCK PLATE JIG ON REPAIRING

On repairing CD section, playing a disc without the CD lid, use Chuck Plate Jig.

- Code number of Chuck Plate Jig : X-4918-255-1

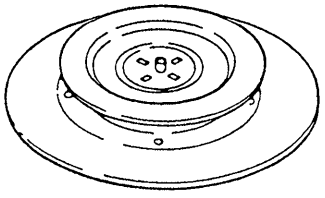

LASER DIODE AND FOCUS SEARCH OPERATION CHECK

1. No disc inserted.
2. Open the lid for CD.
3. Turn on S801 as following figure.
4. Press [►II] key.
5. Confirm the laser diode emission while observing the objecting lens. When there is no emission, Auto Power Control circuit or Optical Pick-up is broken. Objective lens moves up and down three times for the focus search.

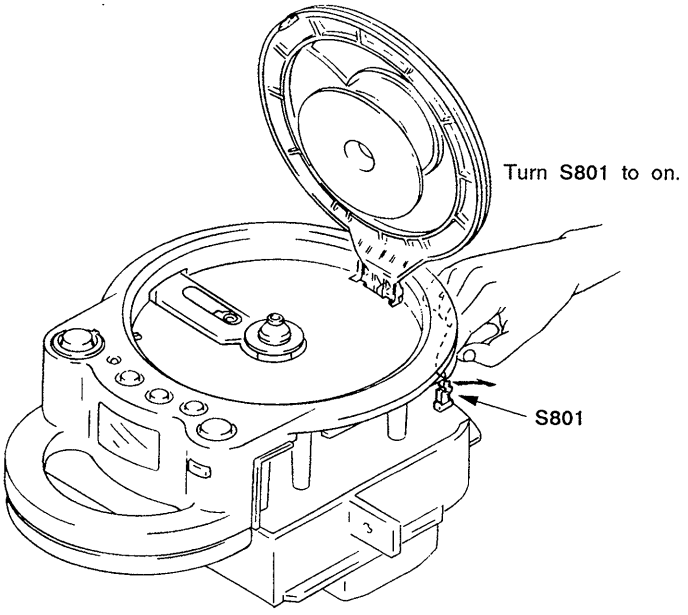

SECTION 1
GENERAL

LOCATION OF CONTROLS

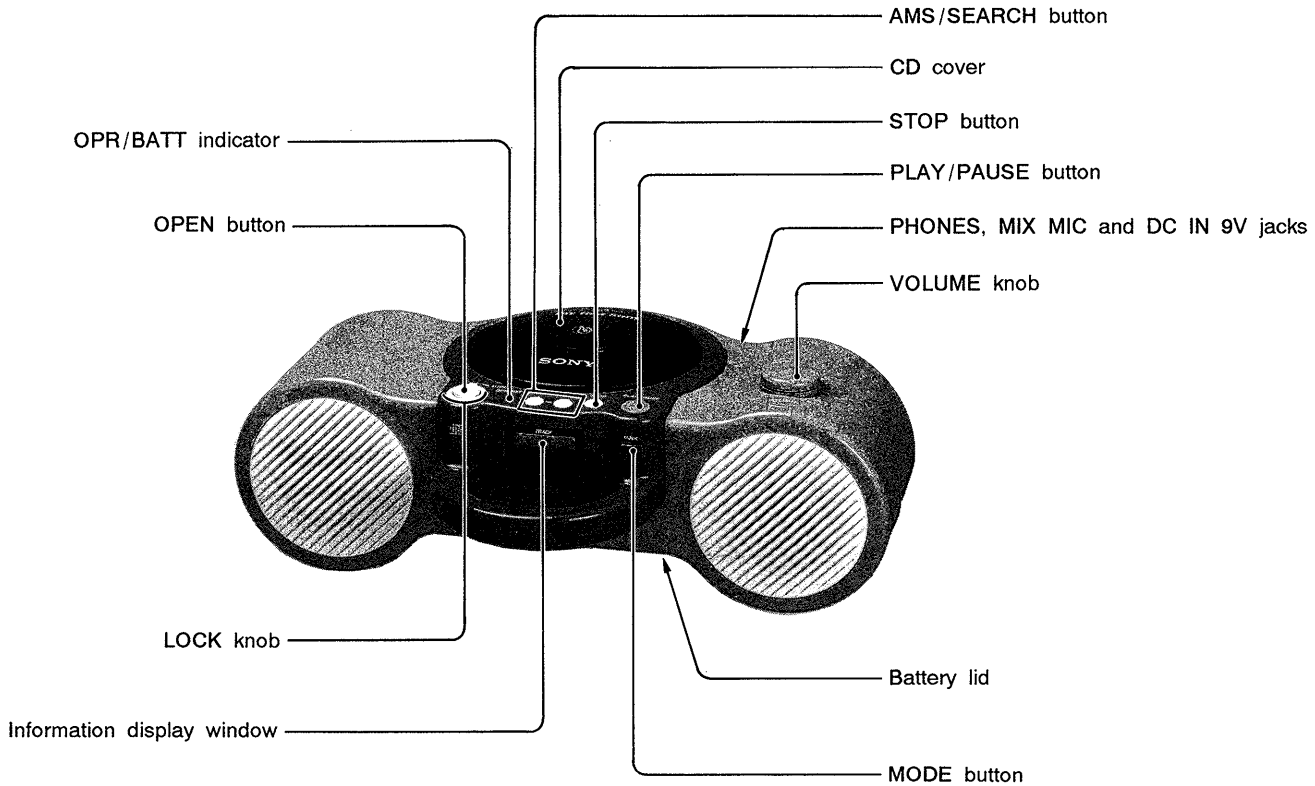

Playing a CD

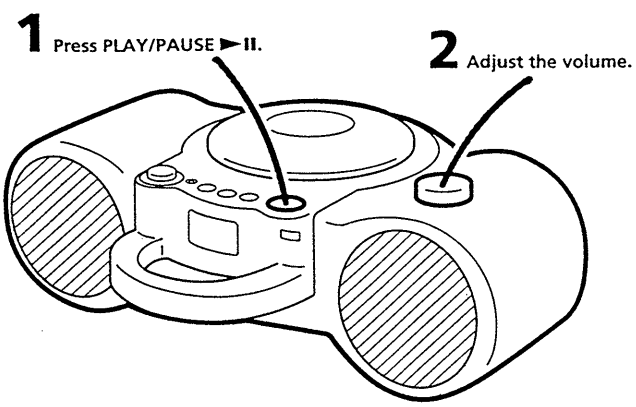

Additional operations

■	Press to stop play. The power is turned off.
►II	Press to pause; press again to resume play.*
⏮	Press once or repeatedly to locate the beginning of the current or previous tracks.
⏭	Press once or repeatedly to locate the beginning of the succeeding tracks.
⏮/⏭	Press and hold during play to locate a desired point on a track.

* If you leave the player in pause for more than 10 minutes, the power is turned off.

Using a microphone

Connect a microphone (not supplied) to the MIC jack located at the rear of the player. You can use the microphone only while a CD is playing.

Listening with headphones

Connect the headphones (not supplied) to the PHONES jack located at the rear of the player. Do not turn up the volume too high when listening with the headphones.

SECTION 2
ELECTRICAL ADJUSTMENTS

Notes on Adjustment

1. Perform adjustment in TEST mode.
   After adjustment, be sure to release TEST mode.
2. Perform adjustments in the order given.
3. Use the disc (YEDS-18, Part No. 3-702-101-01) only when so indicated.

Before Adjustment

Put the set into TEST mode and perform the following checks. Repair if there are any problems.

How to Put into the Test Mode

1. Turn power-on after conducting bridge-solder at the point [TEST] on the MAIN board.
2. 4patterns shall be repeated.

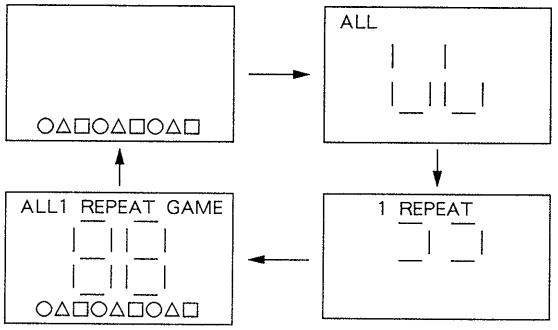

3. Remove bridge-solder after adjustment securely.

- **Sled Motor Check**

  Press [▶II] key, then press [■] key.
  Press [▶▶I], [I◀◀] keys and comfirm that the FOP moves smoothly from the innermost to outermost circumference and back smoothly and with no catching or abnormal noises. (Cancellation of BTL mute.)

  ▶▶I : FOP moves to the outer circumference
  I◀◀ : FOP moves to the inner circumference

[MAIN BOARD] – CONDUCTOR SIDE –

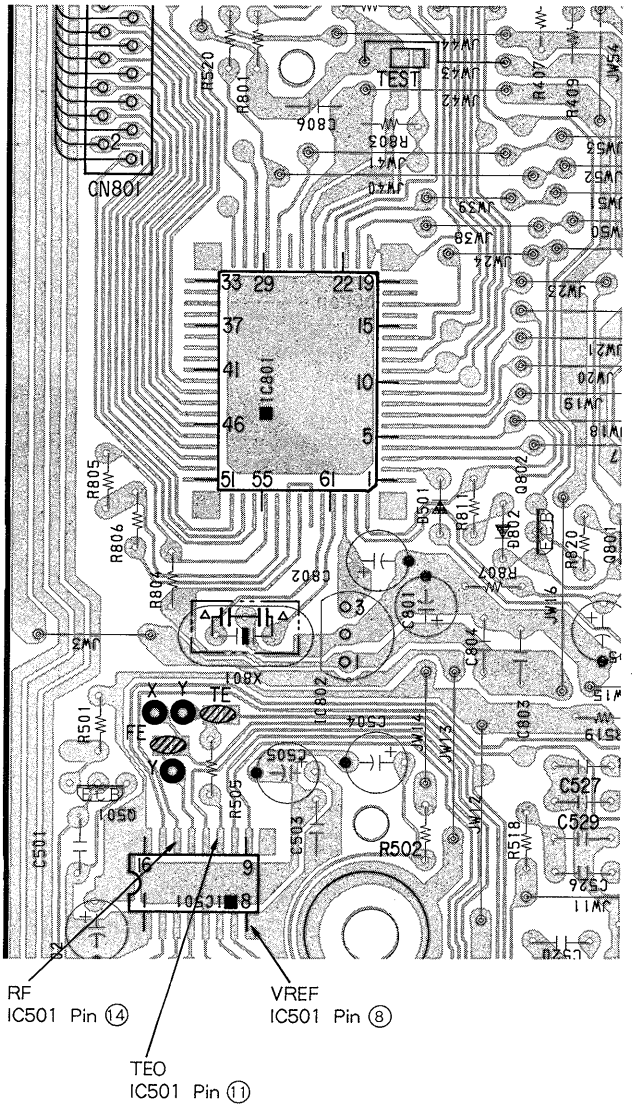

E-F Balance Adjustment

This adjustment is to be done when the optical block is replaced.

Adjustment Procedure :

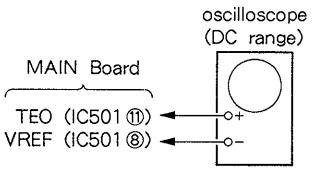

1. Connect the oscilloscope between IC501 pins ⑪ and ⑧.
2. Put the set into TEST mode.
3. Press the [▶▶I] and [I◀◀] keys to move the FOP to the center.
4. Insert disc (YEDS-18) and press [▶II] key.
5. Adjust RV501 so that the oscilloscope traverse waveform is symmetrical, as shown in the figure below.
6. Release TEST mode after adjustment is completed.

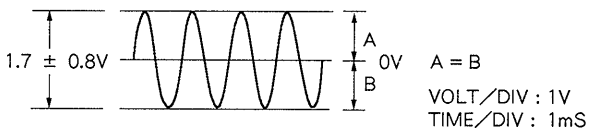

Adjustment Location : MAIN board (See page 5)

Focus / Tracking Gain (RV503, 504)

This gain has a margin, so even if it is slightly off. There is no problem.
Therefore, do not perform, this adjustment.
Please note that it should be fixed to mechanical center position when you moved and do not know original position.

Adjustment Location :
[MAIN BOARD] – COMPONENT SIDE –

Focus Blas Adjustment

This adjustment is to be done when the optical block is replaced.

Adjustment Procedure :

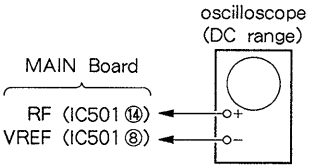

1. Connect the oscilloscope between IC501 pins ⑭ and ⑧.
2. Put the set into TEST mode.
3. Press the [▶▶I] and [I◀◀] keys to move the FOP to the center. (Move the FOP to the music area on the disc to enable easy visibility of the eye pattern.)
4. Insert disc (YEDS-18) and press [▶II] key (FOCUS ON). Press [MODE] key (TRACKING/SLED ON).
5. Adjust RV502 so that the oscilloscope waveform shown in the figure below (eye pattern).
   A good eye pattern means that the diamond shape (◇) in the center of the waveform can be clearly distinguished.
6. Release TEST mode after adjustment is completed.

- RF signal reference waveform (eye pattern)

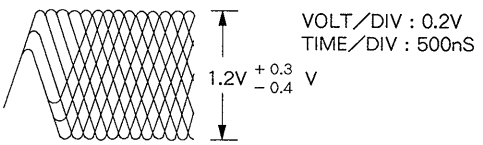

Adjustment Location : MAIN board (See page 5)

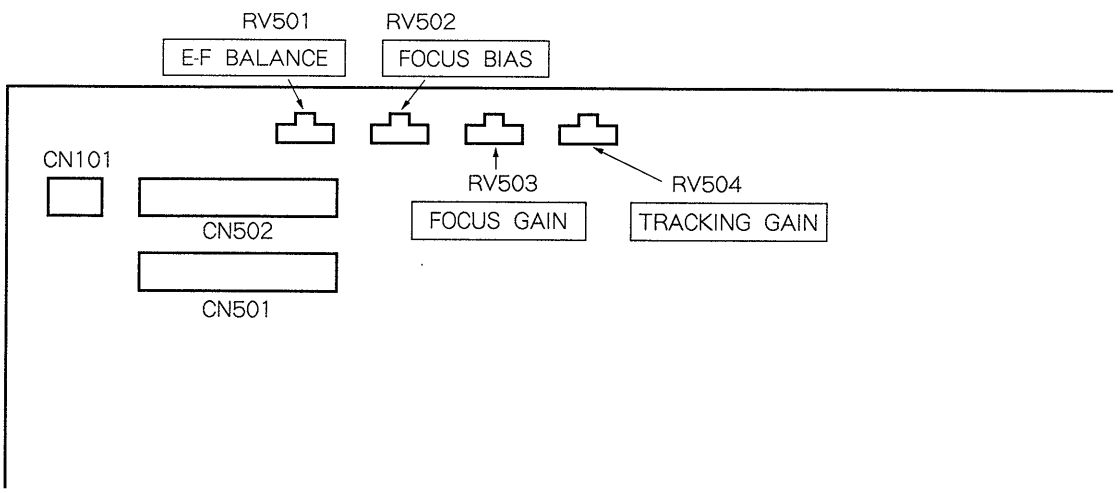

SECTION 3
IC PIN DESCRIPTION

IC801 CXP5084H-666Q (SYSTEM CONTROL)

Pin No.	Pin Name	I/O	Description	$\overline{CD}$=H
1	———	–	Not used	
2	XLAT	O	System latch	
3	GFS	I	GFS input	
4	SCOR	I	SCOR input	
5	SQCK	O	Clock for SQSO read/corite System clock (DSP: IC601, DIGITAL FILTER: IC302)	
6	DATA	O	System data (DSP: IC601, DIGITAL FILTER: IC302)	
7	SENSE	I	SENS input	
8	SQSO	I	SUBQ input	
9	K-PB	I	[►II] Key input (Pull up)	
10	K-STOP	I	[■] Key input (Pull up)	
11	K-FR	I	[I◄◄/◄◄] Key input (Pull up)	
12	K-FF	I	[►►I/►►] Key input (Pull up)	
13	———	–	Not used	
14	P-MODE	I	[MODE] Key input (Pull up)	
15	———	–	Not used	
16	———	–		
17	$\overline{\text{S-DOOR}}$	I	CD holder open/close det (Pull up)	
18	———	–	Not used (Pull up)	
19	———	–		
20	$\overline{\text{HI SPEED}}$	–		
21	LD ON	O	LASER ON, BTL mute	
22	FOK	I	FOK input ⎍	
23	LATCH	O	Latch for DIGITAL FILTER (IC302)	
24	$\overline{\text{TEST}}$	I	TEST mode terminal ("L" → Power on)	
25	GND	–	GND	
26	N. C.	–	–	
27	———	–	Not used	
28	$\overline{\text{XRST}}$	O	SYSTEM RESET (RSP: IC502, DSP: IC601, DIGITAL FILTER: IC302)	
29	MUTE	O	Digital, analog mute ("H": MUTING)	
30	———	–	Not used	
31	PC	O	Power control	
32	———	–	Not used	
33	———	–		
34	———	–		
35	———	–		
36	———	–		
37	———	–		
38	———	–		
39	———	–		
40	———	–		
41	———	–		

Pin No.	Pin Name	I/O	Description	$\overline{CD}$=H
42	S8	O	LCD segment output	
43	S7	O		
44	S6	O		
45	S5	O		
46	S4	O		
47	S3	O		
48	S2	O		
49	S1	O		
50	S0	O		
51	———	–	Not used	
52	COM 2	O	LCD common output	
53	COM 1	O		
54	COM 0	O		
55	VLC 1	–	LCD bias	
56	VLC 2	–		
57	VLC 3	–		
58	VDD	–	Power supply terminal (Data hold voltage 3.5~5.5V: CD STOP)	
59	VL	O	Cut-off output	Z
60	XTAL	O	Clock output	Oscillation stop
61	EXTAL	I	Clock input	
62	RST	I/O	Reset terminal (Pull up)	
63	WP	I	"H" when wake up	
64	REMOTE	I	SIRCS input	

SECTION 4
DIAGRAMS

4-1. BLOCK DIAGRAM

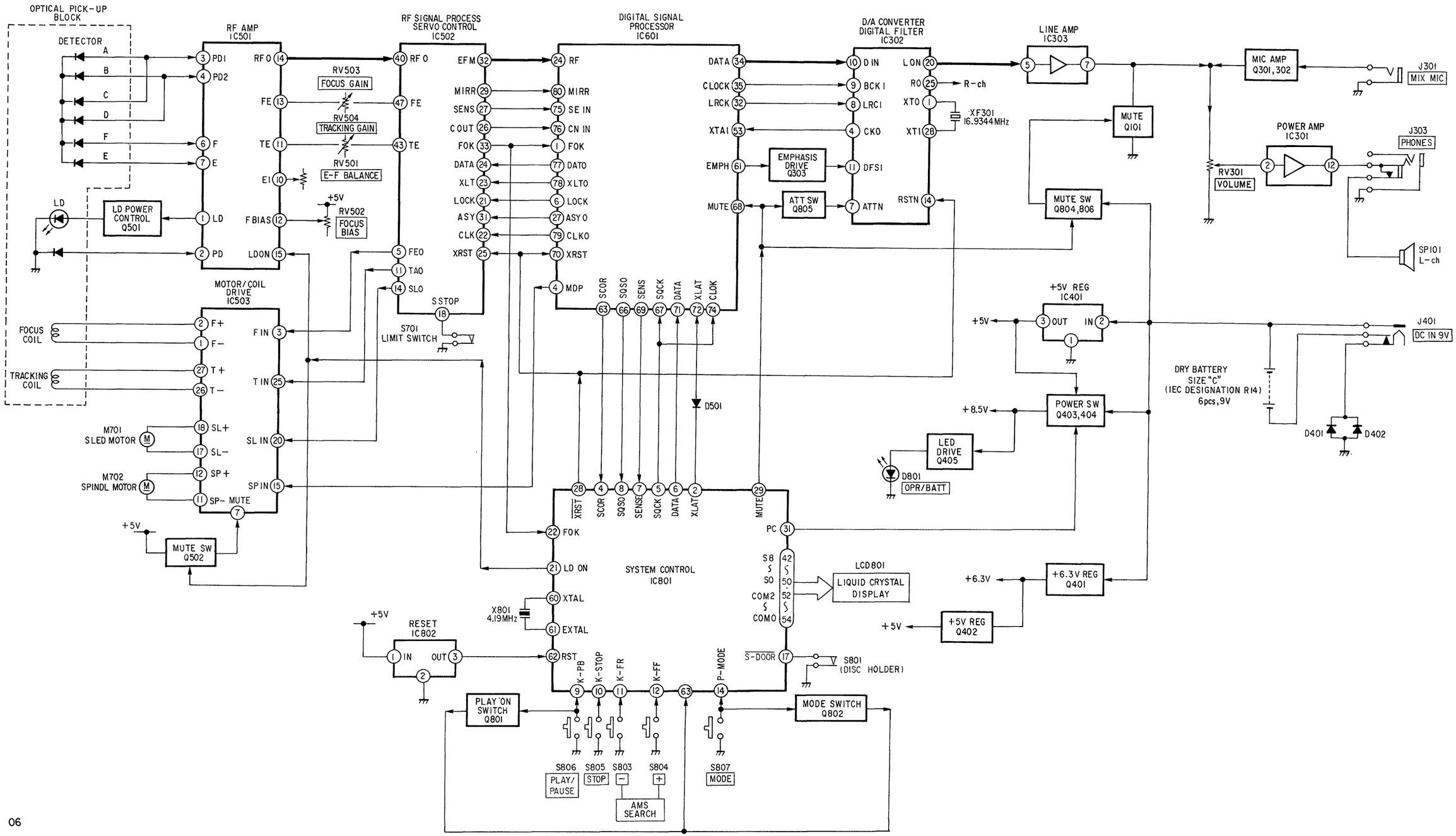

4-2. CIRCUIT BOARDS LOCATION

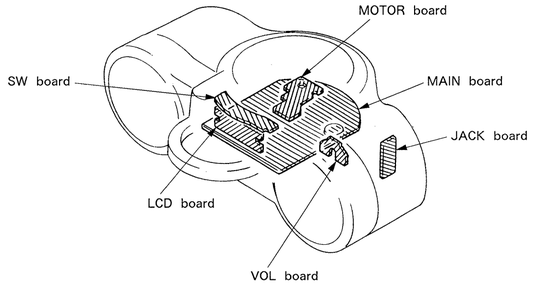

4-3. SEMICONDUCTOR LEAD LAYOUTS

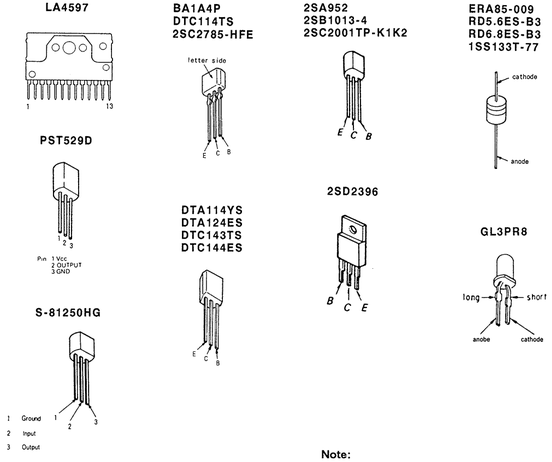

Note:

- : Parts extracted from the component side.
- ■ : Parts mounted on the conductor side.
- : Pattern on the side which is seen.

4-4. PRINTED WIRING BOARDS

• Refer to page 13 for Semiconductor Location.

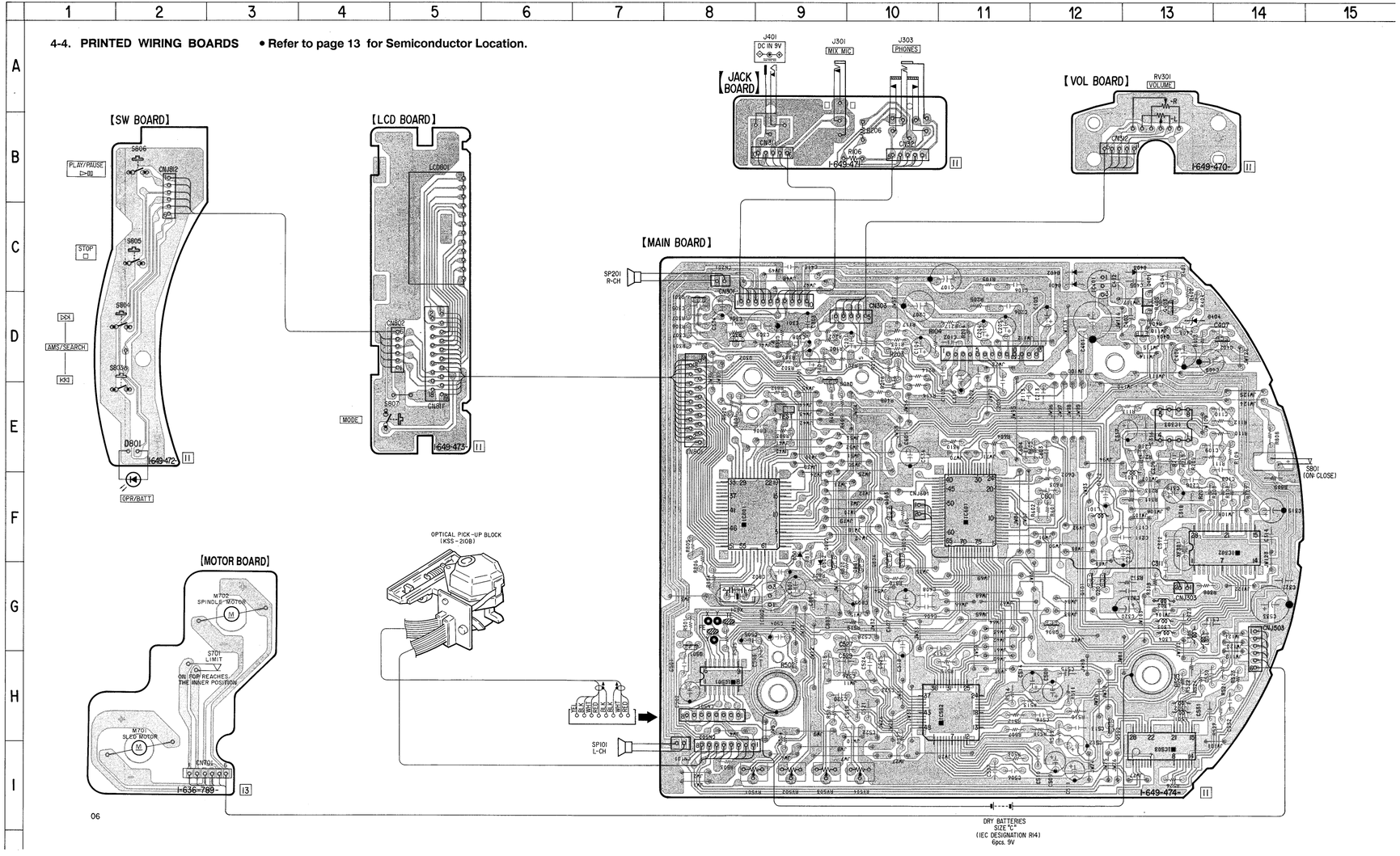

4-5. SCHEMATIC DIAGRAMS

• Refer to page 18 for IC Block Diagrams.

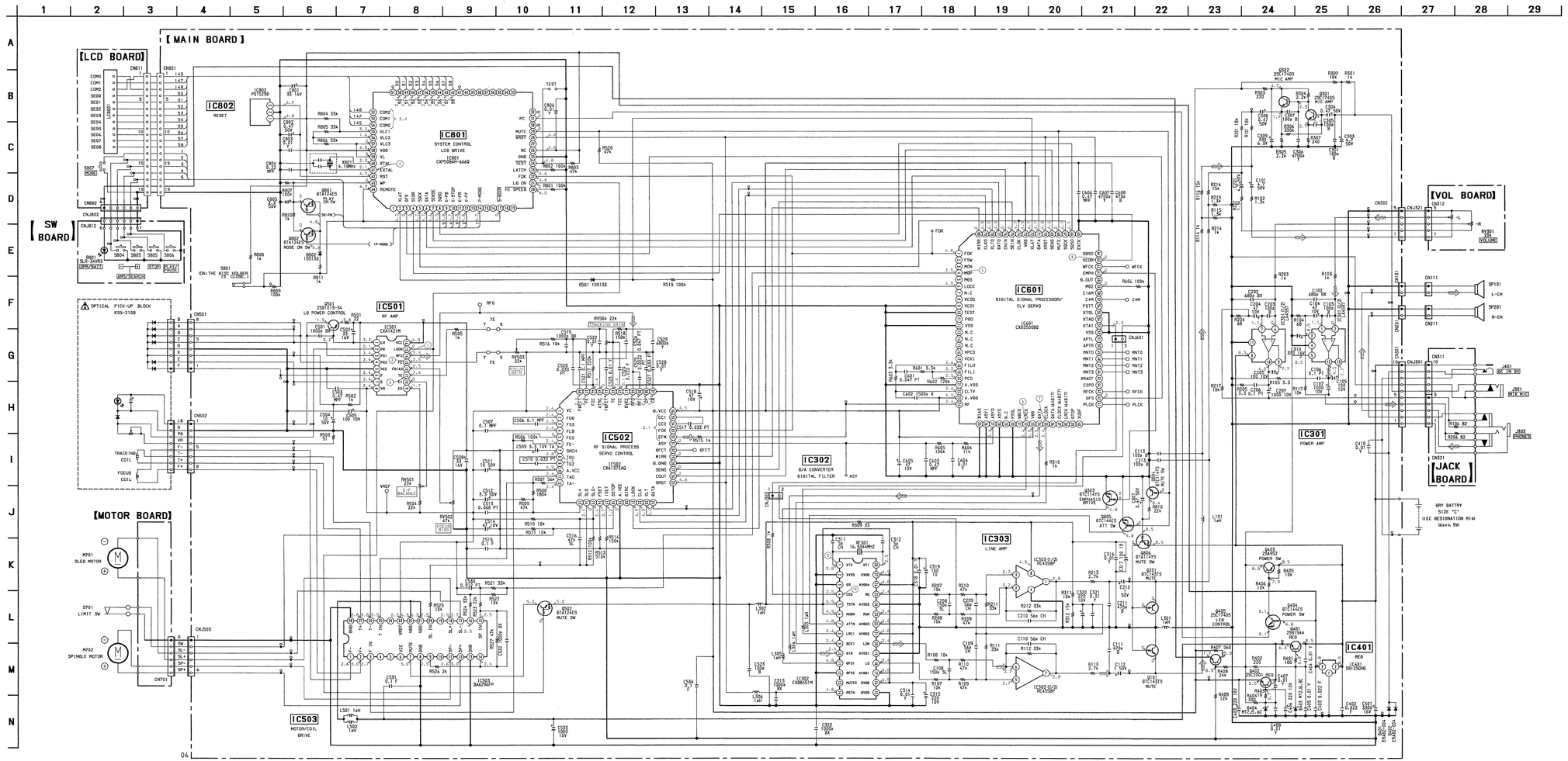

• Semiconductor Location

Ref. No.	Location
D401	C-12
D402	C-12
D403	C-13
D404	D-13
D501	F-9
D801	E-2
D802	F-9
IC301	D-11
IC302	F-14
IC303	E-13
IC401	C-12
IC501	H-8
IC502	H-10
IC503	I-13
IC601	F-11
IC801	F-8
IC802	G-9
Q101	G-12
Q201	G-12
Q301	D-8
Q302	D-8
Q303	F-10
Q401	C-13
Q402	D-14
Q403	D-13
Q404	D-13
Q405	E-9
Q501	G-8
Q502	H-12
Q801	G-10
Q802	F-9
Q804	F-10
Q805	F-10
Q806	G-12

• Waveforms

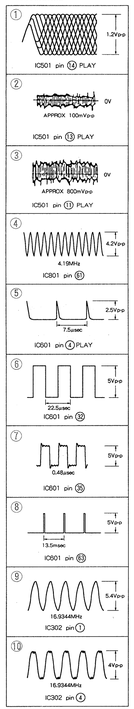

Note:

- All capacitors are in μF unless otherwise noted. pF: μμF 50WV or less are not indicated except for electrolytics and tantalums.
- All resistors are in Ω and ¼W or less unless otherwise specified.
- ▬▬ : B+ Line.
- ▭ : adjustment for repair.
- Power voltage is dc 9V and fed with regulated dc power supply from battery terminal.
- Voltages and waveforms are dc with respect to ground under no signal conditions.
  no mark : CD PLAY
- Voltages are taken with a VOM. (Input impedance 10MΩ)
  Voltage variations may be noted due to normal production tolerances.
- Waveforms are taken with a oscilloscope.
  Voltage variations may be noted due to normal production tolerances.
- Circled numbers refer to waveforms.
- Signal path.
  ⇒ : CD

4-6. IC BLOCK DIAGRAMS

IC501 CXA1421M

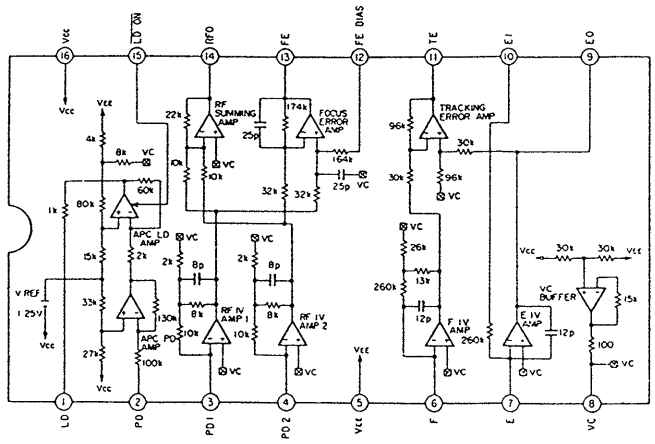

IC503 BA6296FP

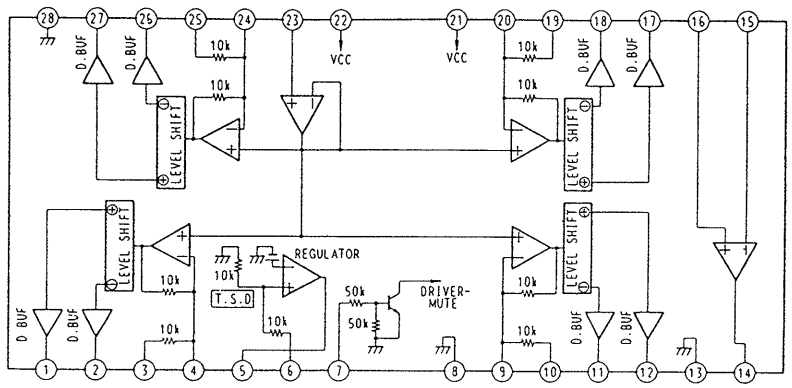

IC502 CXA1372AQ

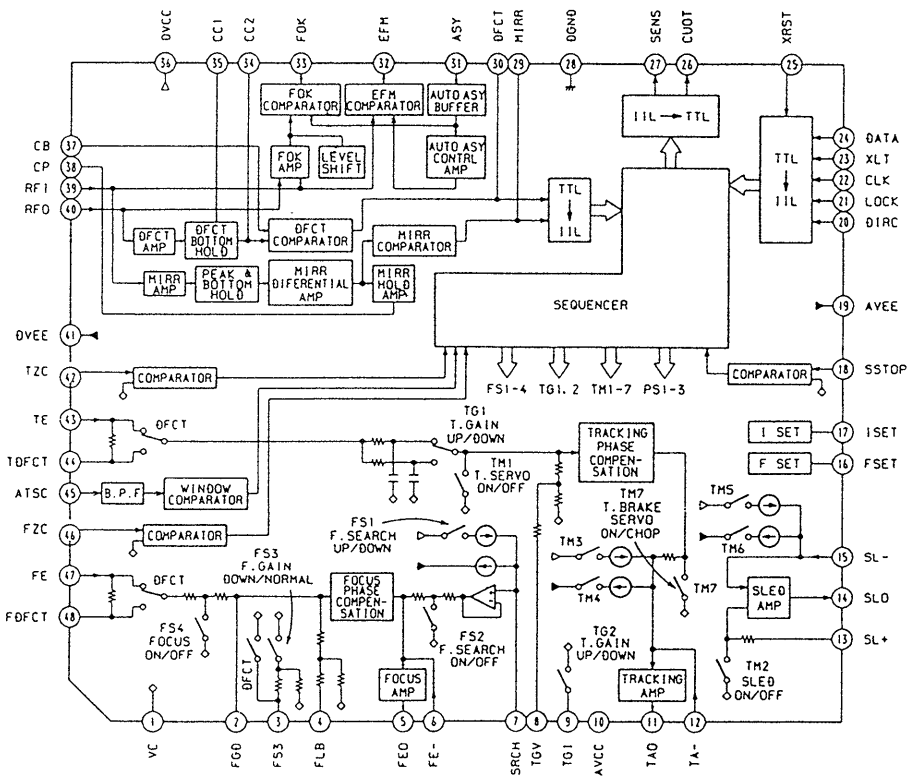

IC302 CXD8451M

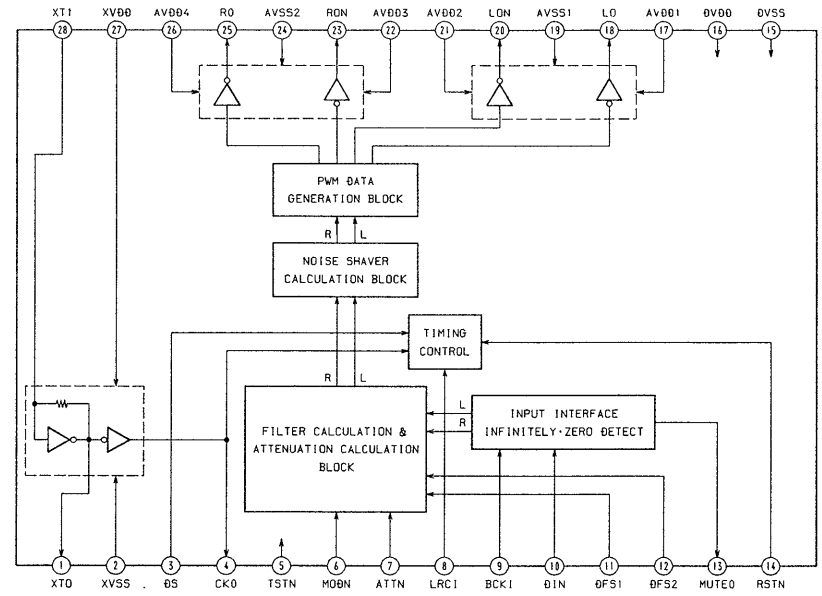

IC601 CXD2500BQ

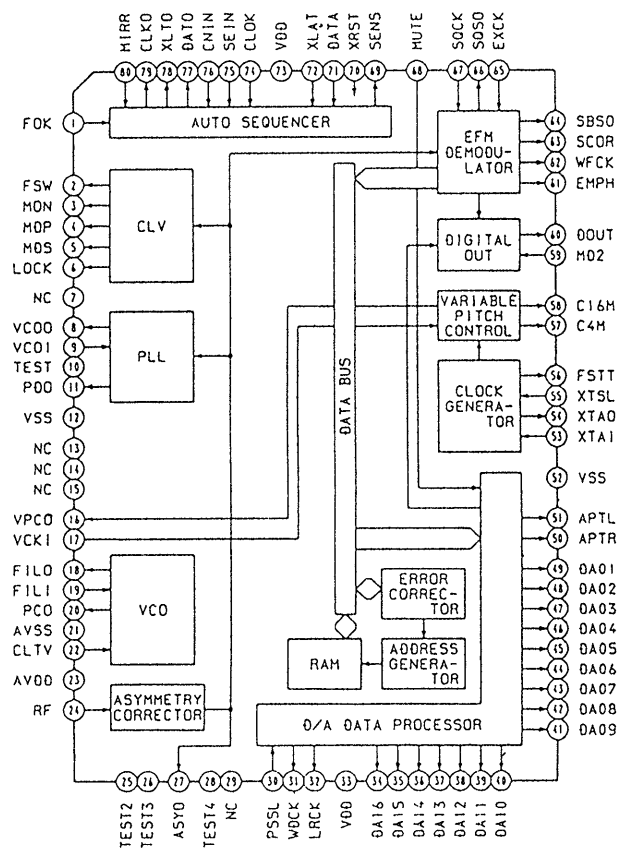

SECTION 5
EXPLODED VIEWS

NOTE:

- -XX,-X mean standardized parts, so they may have some difference from the original one.
- Color indication of Appearance Parts.
  Example:
  KNOB,BALANCE (WHITE) . . . (RED)
  ↑ Parts Color ↑ Cabinet's Color
- Items marked " * " are not stocked since they are seldom required for routine service. Some delay should be anticipated when ordering these items.
- The mechanical parts with no reference number in the exploded views are not supplied.
- Hardware (# mark) list is given in the last of this parts list.

The components identified by mark ⚠ or dotted line with mark ⚠ are critical for safety.
Replace only with part number specified.

5-1. GENERAL SECTION (1)

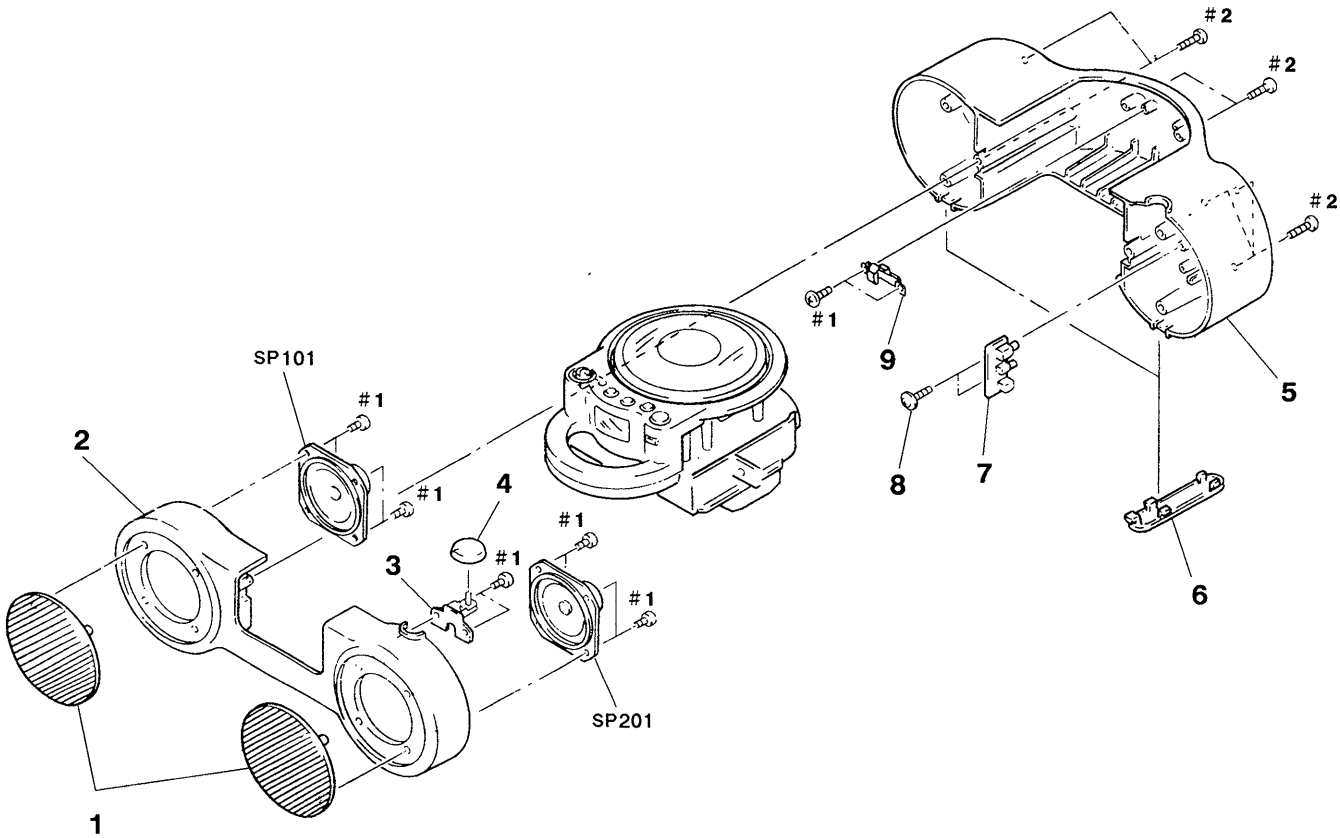

Ref. No.	Part No.	Description	Remark
1	4-958-853-01	GRILLE (SPEAKER)	
2	4-958-829-01	CABINET (FRONT)	
* 3	1-649-470-11	VOL BOARD	
4	4-958-848-01	KNOB (VOLUME)	
5	4-958-830-01	CABINET (REAR)	
6	4-960-163-01	FOOT, ORNAMENTAL	

Ref. No.	Part No.	Description	Remark
* 7	1-649-471-11	JACK BOARD	
8	4-960-167-01	SCREW (3X8) (DIA. 10), +WH	
9	4-958-840-01	SPRING, UP, CD LID	
SP101	1-504-438-11	SPEAKER (7.7CM)	
SP201	1-504-438-11	SPEAKER (7.7CM)	

5-2. GENERAL SECTION (2)

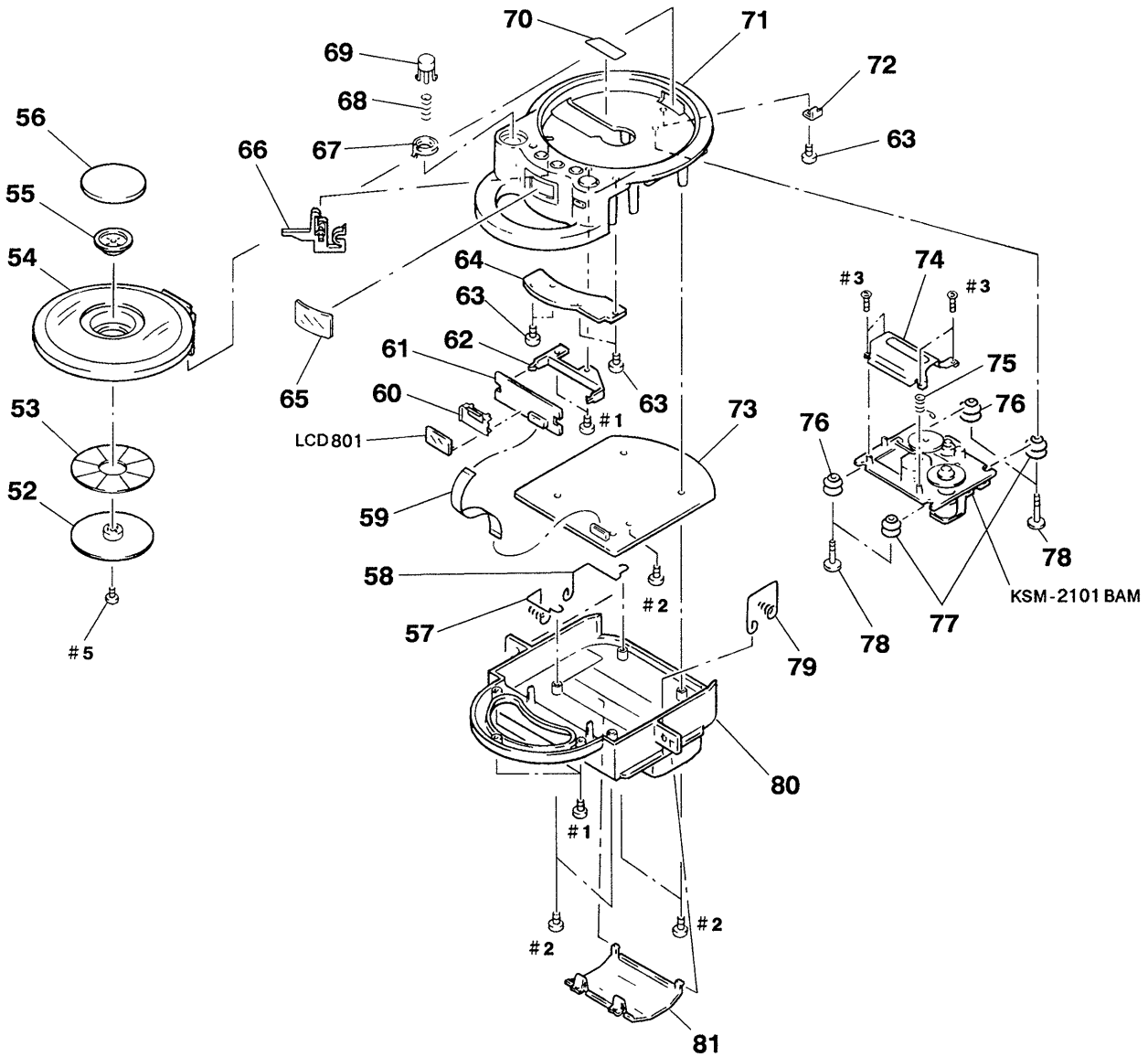

Ref. No.	Part No.	Description	Remark
52	3-704-435-01	PLATE (M), CHUCK	
53	4-961-918-01	SEAL (CHUCKING)	
54	X-4944-298-1	LID ASSY, CD	
55	1-452-558-11	MAGNET	
56	4-958-842-01	COVER (CHUCKING)	
57	4-958-837-01	TERMINAL (-), BATTERY	
58	4-958-836-01	TERMINAL (+), BATTERY	
59	1-690-422-11	WIRE, FLAT TYPE (19 CORE)	
* 60	4-958-845-01	BRACKET (LCD)	
* 61	1-649-473-11	LCD BOARD	
62	4-958-844-01	CHASSIS (LCD)	
63	4-928-635-01	SCREW, +BV (2.6X8) TAPPING	
* 64	1-649-472-11	SW BOARD	
65	4-958-855-01	WINDOW (LCD)	
66	4-958-841-01	LEVER (OPEN)	
67	4-958-856-01	BUTTON (LOCK)	
68	4-958-839-01	SPRING (OPEN)	
69	4-958-847-01	BUTTON (OPEN)	
70	4-961-919-01	LABEL (LENS CAUTION)	
71	X-4944-299-1	CABINET (UPPER) ASSY, CD	
* 72	4-960-164-01	BRACKET (CD)	
73	A-3264-791-A	MAIN BOARD, COMPLETE	
74	4-928-936-01	COVER, CD	
75	4-931-358-01	SPRING	
76	4-922-858-01	DAMPER	
77	4-922-858-11	DAMPER	
78	4-931-373-01	SCREW, CD FITTING	
79	4-958-838-01	TERMINAL (+.-), BATTERY	
80	A-3263-964-A	CABINET (LOWER) ASSY, CD	
81	4-958-832-01	LID, BATTERY CASE	
LCD801	1-810-337-11	DISPLAY PANEL, LIQUID CRYSTAL	

5-3. OPTICAL PICK-UP SECTION (KSM-2101BAM)

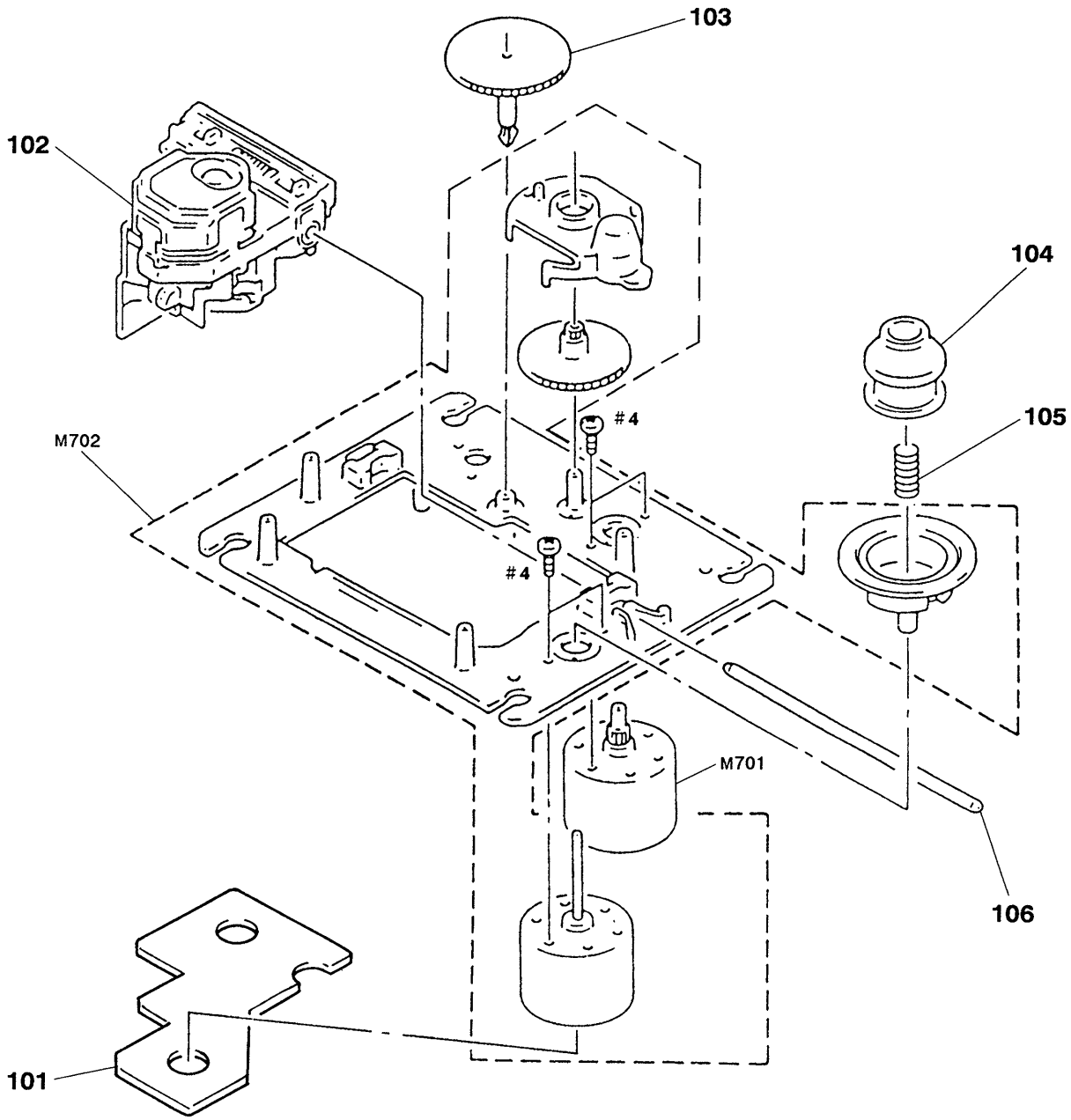

Ref. No.	Part No.	Description	Remark
* 101	1-636-789-13	MOTOR BOARD	
⚠102	8-848-137-11	OPTICAL PICK-UP BLOCK KSS-210B	
103	2-625-188-02	GEAR (A)	
104	2-625-186-01	RING (C), CENTER	
105	2-625-191-01	SPRING, COMPRESSION	
106	4-917-565-01	SHAFT, SLED	

Ref. No.	Part No.	Description	Remark
M701	X-2625-132-1	MOTOR GEAR ASSY (MB) SLED	
M702	X-2625-133-2	MOTOR ASSY, SPINDLE(TT CHASSIS ASSY(MB))	

Note: The components identified by mark ⚠ or dotted line with mark ⚠ are critical for safety.
Replace only with part number specified.

SECTION 6
ELECTRICAL PARTS LIST

NOTE:

- Due to standardization, replacements in the parts list may be different from the part specified in the diagrams or the components used on the set.
- -XX,-X mean standardized parts, so they may have some difference from the original one.
- RESISTORS
  All resistors are in ohms
  METAL : Metal-film resistor
  METAL OXIDE : Metal Oxide-film resistor
  F : nonflammable
- Items marked "*" are not stocked since they are seldom required for routine service. Some delay should be anticipated when ordering these items.
- SEMICONDUCTORS
  In each case,u : μ ,for example :
  uA... : μA..., uPA... : μPA...,
  uPB... : μPB..., uPC... : μPC...,
  uPD... : μPD...
- CAPACITORS
  uF : μF
- COILS
  uH : μH

When indicating parts by reference number, please include the board name.

The components identified by mark ⚠ or dotted line with mark ⚠ are critical for safety.
Replace only with part number specified.

Ref. No.	Part No.	Description	Remark
*	1-649-471-11	JACK BOARD **********	
		< CONNECTOR >	
* CN311	1-564-707-11	PIN, CONNECTOR (SMALL TYPE) 5P	
* CN321	1-564-707-11	PIN, CONNECTOR (SMALL TYPE) 5P	
		< JACK >	
J301	1-563-330-11	JACK (MIX MIC)	
J303	1-566-891-11	JACK (PHONES)	
J401	1-695-565-11	JACK, DC(POLARITY UNIFIED TYPE) (DC IN 9V)	
		< RESISTOR >	
R106	1-249-404-00	CARBON 82 5% 1/4W	
R206	1-249-404-00	CARBON 82 5% 1/4W	
**********			
*	1-649-473-11	LCD BOARD *********	
*	4-958-845-01	BRACKET (LCD)	
		< CONNECTOR >	
CN802	1-564-722-11	PIN, CONNECTOR (SMALL TYPE) 6P	
* CN811	1-568-862-21	SOCKET, CONNECTOR 19P	
		< LIQUID CRYSTAL DISPLAY >	
LCD801	1-810-337-11	DISPLAY PANEL, LIQUID CRYSTAL	
		< SWITCH >	
S807	1-572-198-11	SWITCH, KEYBOARD (MODE)	
**********			

Ref. No.	Part No.	Description			Remark
	A-3264-791-A	MAIN BOARD, COMPLETE **********			
	1-690-422-11	WIRE, FLAT TYPE (19 CORE)			
		< CAPACITOR >			
C101	1-124-927-11	ELECT	4.7uF	20%	100V
C102	1-162-292-31	CERAMIC	680PF	10%	50V
C103	1-162-282-31	CERAMIC	100PF	10%	50V
C104	1-124-126-00	ELECT	47uF	20%	10V
C105	1-124-443-00	ELECT	100uF	20%	10V
C106	1-130-495-00	MYLAR	0.1uF	5%	50V
C107	1-124-473-11	ELECT	1000uF	20%	10V
C108	1-101-361-00	CERAMIC	150PF	5%	50V
C109	1-101-884-00	CERAMIC	56PF	5%	50V
C110	1-101-884-00	CERAMIC	56PF	5%	50V
C111	1-162-290-31	CERAMIC	470PF	10%	50V
C112	1-124-903-11	ELECT	1uF	20%	50V
C113	1-162-282-31	CERAMIC	100PF	10%	50V
C201	1-124-927-11	ELECT	4.7uF	20%	100V
C202	1-162-292-31	CERAMIC	680PF	10%	50V
C203	1-162-282-31	CERAMIC	100PF	10%	50V
C204	1-124-126-00	ELECT	47uF	20%	10V
C205	1-124-443-00	ELECT	100uF	20%	10V
C206	1-130-495-00	MYLAR	0.1uF	5%	50V
C207	1-124-473-11	ELECT	1000uF	20%	10V
C208	1-101-361-00	CERAMIC	150PF	5%	50V
C209	1-101-884-00	CERAMIC	56PF	5%	50V
C210	1-101-884-00	CERAMIC	56PF	5%	50V
C211	1-162-290-31	CERAMIC	470PF	10%	50V
C212	1-124-903-11	ELECT	1uF	20%	50V
C213	1-162-282-31	CERAMIC	100PF	10%	50V
C301	1-162-282-31	CERAMIC	100PF	10%	50V
C303	1-124-927-11	ELECT	4.7uF	20%	100V

MAIN

Ref. No.	Part No.	Description			Remark
C304	1-124-902-00	ELECT	0.47uF	20%	50V
C305	1-162-282-31	CERAMIC	100PF	10%	50V
C306	1-161-377-00	CERAMIC	0.0047uF	30%	16V
C307	1-162-282-31	CERAMIC	100PF	10%	50V
C308	1-124-902-00	ELECT	0.47uF	20%	50V
C309	1-124-442-00	ELECT	330uF	20%	6.3V
C310	1-124-119-00	ELECT	330uF	20%	16V
C311	1-164-014-11	CERAMIC	5PF	0.25PF	50V
C312	1-164-014-11	CERAMIC	5PF	0.25PF	50V
C313	1-162-294-31	CERAMIC	0.001uF	10%	50V
C314	1-161-379-00	CERAMIC	0.01uF	20%	25V
C315	1-126-176-11	ELECT	220uF	20%	10V
C316	1-161-379-00	CERAMIC	0.01uF	20%	25V
C317	1-124-443-00	ELECT	100uF	20%	10V
C318	1-161-379-00	CERAMIC	0.01uF	20%	25V
C319	1-124-443-00	ELECT	100uF	20%	10V
C320	1-126-176-11	ELECT	220uF	20%	10V
C321	1-161-379-00	CERAMIC	0.01uF	20%	25V
C322	1-162-294-31	CERAMIC	0.001uF	10%	50V
C323	1-162-282-31	CERAMIC	100PF	10%	50V
C401	1-126-936-11	ELECT	3300uF	20%	16V
C402	1-161-494-00	CERAMIC	0.022uF		25V
C403	1-161-494-00	CERAMIC	0.022uF		25V
C404	1-161-379-00	CERAMIC	0.01uF	20%	25V
C405	1-161-379-00	CERAMIC	0.01uF	20%	25V
C406	1-126-176-11	ELECT	220uF	20%	10V
C407	1-161-379-00	CERAMIC	0.01uF	20%	25V
C408	1-161-379-00	CERAMIC	0.01uF	20%	25V
C409	1-126-176-11	ELECT	220uF	20%	10V
C410	1-161-379-00	CERAMIC	0.01uF	20%	25V
C501	1-162-294-31	CERAMIC	0.001uF	10%	50V
C502	1-124-034-51	ELECT	33uF	20%	16V
C503	1-136-173-00	FILM	0.47uF	5%	50V
C504	1-124-907-11	ELECT	10uF	20%	50V
C505	1-124-443-00	ELECT	100uF	20%	10V
C506	1-136-165-00	FILM	0.1uF	5%	50V
C507	1-136-165-00	FILM	0.1uF	5%	50V
C508	1-124-034-51	ELECT	33uF	20%	16V
C509	1-131-368-00	TANTALUM	3.3uF	10%	16V
C510	1-130-489-00	MYLAR	0.033uF	5%	50V
C511	1-124-907-11	ELECT	10uF	20%	50V
C512	1-123-382-00	ELECT	3.3uF	20%	100V
C513	1-130-493-00	MYLAR	0.068uF	5%	50V
C514	1-124-126-00	ELECT	47uF	20%	10V
C515	1-162-851-11	CERAMIC	0.1uF		16V
C516	1-162-215-31	CERAMIC	47PF	5%	50V
C517	1-130-489-00	MYLAR	0.033uF	5%	50V
C518	1-124-126-00	ELECT	47uF	20%	10V
C519	1-162-294-31	CERAMIC	0.001uF	10%	50V
C520	1-130-489-00	MYLAR	0.033uF	5%	50V
C521	1-136-165-00	FILM	0.1uF	5%	50V
C522	1-161-379-00	CERAMIC	0.01uF	20%	25V
C523	1-161-379-00	CERAMIC	0.01uF	20%	25V
C524	1-161-494-00	CERAMIC	0.022uF		25V
C525	1-130-475-00	MYLAR	0.0022uF	5%	50V
C526	1-130-491-00	MYLAR	0.047uF	5%	50V
C527	1-130-489-00	MYLAR	0.033uF	5%	50V
C528	1-161-379-00	CERAMIC	0.01uF	20%	25V
C529	1-161-329-00	CERAMIC	0.0068uF	30%	16V
C530	1-130-484-00	MYLAR	0.012uF	5%	50V
C531	1-162-851-11	CERAMIC	0.1uF		16V
C532	1-162-294-31	CERAMIC	0.001uF	10%	50V
C533	1-124-473-11	ELECT	1000uF	20%	10V
C534	1-162-851-11	CERAMIC	0.1uF		16V
C601	1-130-491-00	MYLAR	0.047uF	5%	50V
C602	1-161-374-11	CERAMIC	0.0015uF	20%	50V
C603	1-136-173-00	FILM	0.47uF	5%	50V
C604	1-161-379-00	CERAMIC	0.01uF	20%	25V
C605	1-124-126-00	ELECT	47uF	20%	10V
C606	1-136-173-00	FILM	0.47uF	5%	50V
C607	1-161-377-00	CERAMIC	0.0047uF	30%	16V
C608	1-162-290-31	CERAMIC	470PF	10%	50V
C801	1-124-034-51	ELECT	33uF	20%	16V
C802	1-124-902-00	ELECT	0.47uF	20%	50V
C803	1-161-379-00	CERAMIC	0.01uF	20%	25V
C804	1-136-169-00	FILM	0.22uF	5%	50V
C805	1-124-925-11	ELECT	2.2uF	20%	100V
C806	1-161-379-00	CERAMIC	0.01uF	20%	25V
C807	1-124-902-00	ELECT	0.47uF	20%	50V

< CONNECTOR >

* CN101	1-564-704-11	PIN, CONNECTOR (SMALL TYPE)	2P
* CN201	1-564-704-11	PIN, CONNECTOR (SMALL TYPE)	2P
* CN301	1-564-712-11	PIN, CONNECTOR (SMALL TYPE)	10P
* CN302	1-564-707-11	PIN, CONNECTOR (SMALL TYPE)	5P
* CN501	1-564-710-11	PIN, CONNECTOR (SMALL TYPE)	8P
* CN502	1-564-710-11	PIN, CONNECTOR (SMALL TYPE)	8P
* CN801	1-568-802-21	SOCKET, CONNECTOR	19P

< CONNECTOR >

* CNJ301	1-562-652-11	SOCKET, CONNECTOR	10P
* CNJ303	1-562-196-41	HOUSING, CONNECTOR	2P
* CNJ321	1-562-647-31	SOCKET, CONNECTOR	5P
* CNJ502	1-562-650-11	SOCKET, CONNECTOR	8P
* CNJ503	1-562-200-11	HOUSING, CONNECTOR	6P
* CNJ601	1-562-196-41	HOUSING, CONNECTOR	2P

Ref. No.	Part No.	Description	Remark
		< DIODE >	
D401	8-719-987-87	DIODE ERA85-009	
D402	8-719-987-87	DIODE ERA85-009	
D403	8-719-109-98	DIODE RD6.8ES-B3	
D404	8-719-109-90	DIODE RD5.6ES-B3	
D501	8-719-901-33	DIODE 1SS133T-77	
D802	8-719-901-33	DIODE 1SS133T-77	
		< IC >	
IC301	8-759-820-22	IC LA4597	
IC302	8-759-093-98	IC CXD8451M	
IC303	8-759-145-58	IC UPC4558C	
IC401	8-759-912-55	IC S-81250HG	
IC501	8-752-039-03	IC CXA1421M	
IC502	8-752-058-77	IC CXA1372AQ	
IC503	8-759-518-59	IC BA6296FP	
IC601	8-752-352-93	IC CXD2500BQ	
IC801	8-752-847-88	IC CXP5084H-666Q	
IC802	8-759-971-11	IC PST529D	
		< COIL >	
L101	1-410-316-11	INDUCTOR 1uH	
L301	1-410-316-11	INDUCTOR 1uH	
L302	1-410-316-11	INDUCTOR 1uH	
L303	1-410-316-11	INDUCTOR 1uH	
L304	1-410-316-11	INDUCTOR 1uH	
L305	1-410-316-11	INDUCTOR 1uH	
L306	1-410-316-11	INDUCTOR 1uH	
L501	1-410-316-11	INDUCTOR 1uH	
L502	1-410-316-11	INDUCTOR 1uH	
		< TRANSISTOR >	
Q101	8-729-900-74	TRANSISTOR DTC143TS	
Q201	8-729-900-74	TRANSISTOR DTC143TS	
Q301	8-729-119-78	TRANSISTOR 2SC2785-HFE	
Q302	8-729-119-78	TRANSISTOR 2SC2785-HFE	
Q303	8-729-115-80	TRANSISTOR BA1A4P	
Q401	8-729-021-82	TRANSISTOR 2SD2396	
Q402	8-729-011-92	TRANSISTOR 2SC2001TP-K1K2	
Q403	8-729-195-23	TRANSISTOR 2SA952	
Q404	8-729-900-89	TRANSISTOR DTC144ES	
Q405	8-729-119-78	TRANSISTOR 2SC2785-HFE	
Q501	8-729-801-84	TRANSISTOR 2SB1013-4	
Q502	8-729-900-63	TRANSISTOR DTA124ES	
Q801	8-729-900-63	TRANSISTOR DTA124ES	
Q802	8-729-900-63	TRANSISTOR DTA124ES	
Q804	8-729-904-39	TRANSISTOR DTC114TS	
Q805	8-729-900-89	TRANSISTOR DTC144ES	
Q806	8-729-902-80	TRANSISTOR DTA114YS	

Ref. No.	Part No.	Description	Remark
		< RESISTOR >	
R101	1-249-432-11	CARBON 18K 5% 1/4W	
R102	1-247-834-11	CARBON 1.3K 5% 1/4W	
R103	1-249-417-11	CARBON 1K 5% 1/4W	
R104	1-249-403-11	CARBON 68 5% 1/4W	
R105	1-249-387-11	CARBON 3.3 5% 1/4W	
R107	1-249-429-11	CARBON 10K 5% 1/4W	
R108	1-249-429-11	CARBON 10K 5% 1/4W	
R109	1-249-437-11	CARBON 47K 5% 1/4W	
R110	1-249-437-11	CARBON 47K 5% 1/4W	
R111	1-249-435-11	CARBON 33K 5% 1/4W	
R112	1-249-435-11	CARBON 33K 5% 1/4W	
R113	1-249-422-11	CARBON 2.7K 5% 1/4W	
R114	1-249-417-11	CARBON 1K 5% 1/4W	
R115	1-247-834-11	CARBON 1.3K 5% 1/4W	
R116	1-249-431-11	CARBON 15K 5% 1/4W	
R117	1-249-429-11	CARBON 10K 5% 1/4W	
R201	1-249-432-11	CARBON 18K 5% 1/4W	
R202	1-247-834-11	CARBON 1.3K 5% 1/4W	
R203	1-249-417-11	CARBON 1K 5% 1/4W	
R204	1-249-403-11	CARBON 68 5% 1/4W	
R205	1-249-387-11	CARBON 3.3 5% 1/4W	
R207	1-249-429-11	CARBON 10K 5% 1/4W	
R208	1-249-429-11	CARBON 10K 5% 1/4W	
R209	1-249-437-11	CARBON 47K 5% 1/4W	
R210	1-249-437-11	CARBON 47K 5% 1/4W	
R211	1-249-435-11	CARBON 33K 5% 1/4W	
R212	1-249-435-11	CARBON 33K 5% 1/4W	
R213	1-249-422-11	CARBON 2.7K 5% 1/4W	
R214	1-249-417-11	CARBON 1K 5% 1/4W	
R215	1-247-834-11	CARBON 1.3K 5% 1/4W	
R216	1-249-431-11	CARBON 15K 5% 1/4W	
R217	1-249-429-11	CARBON 10K 5% 1/4W	
R301	1-249-417-11	CARBON 1K 5% 1/4W	
R302	1-249-429-11	CARBON 10K 5% 1/4W	
R303	1-249-409-11	CARBON 220 5% 1/4W	
R304	1-249-421-11	CARBON 2.2K 5% 1/4W	
R305	1-249-421-11	CARBON 2.2K 5% 1/4W	
R306	1-247-891-00	CARBON 330K 5% 1/4W	
R307	1-247-816-11	CARBON 240 5% 1/4W	
R308	1-249-417-11	CARBON 1K 5% 1/4W	
R309	1-249-399-11	CARBON 33 5% 1/4W	
R310	1-249-417-11	CARBON 1K 5% 1/4W	
R311	1-249-429-11	CARBON 10K 5% 1/4W	
R312	1-249-431-11	CARBON 15K 5% 1/4W	
R401	1-249-405-11	CARBON 100 5% 1/4W	
R402	1-249-409-11	CARBON 220 5% 1/4W	
R403	1-249-393-11	CARBON 10 5% 1/4W	
R404	1-249-411-11	CARBON 330 5% 1/4W	

Ref. No.	Part No.	Description				Remark
R405	1-249-429-11	CARBON	10K	5%	1/4W	
R406	1-249-429-11	CARBON	10K	5%	1/4W	
R407	1-249-414-11	CARBON	560	5%	1/4W	
R408	1-247-864-11	CARBON	24K	5%	1/4W	
R409	1-249-430-11	CARBON	12K	5%	1/4W	
R501	1-249-397-11	CARBON	22	5%	1/4W	
R502	1-249-417-11	CARBON	1K	5%	1/4W	
R503	1-247-806-11	CARBON	91	5%	1/4W	
R504	1-249-433-11	CARBON	22K	5%	1/4W	
R505	1-249-417-11	CARBON	1K	5%	1/4W	
R506	1-249-441-11	CARBON	100K	5%	1/4W	
R507	1-249-438-11	CARBON	56K	5%	1/4W	
R508	1-247-885-00	CARBON	180K	5%	1/4W	
R509	1-249-437-11	CARBON	47K	5%	1/4W	
R510	1-249-432-11	CARBON	18K	5%	1/4W	
R511	1-249-429-11	CARBON	10K	5%	1/4W	
R512	1-249-441-11	CARBON	100K	5%	1/4W	
R513	1-247-896-11	CARBON	510K	5%	1/4W	
R514	1-247-883-00	CARBON	150K	5%	1/4W	
R515	1-249-417-11	CARBON	1K	5%	1/4W	
R516	1-249-429-11	CARBON	10K	5%	1/4W	
R517	1-247-887-00	CARBON	220K	5%	1/4W	
R518	1-247-883-00	CARBON	150K	5%	1/4W	
R519	1-249-441-11	CARBON	100K	5%	1/4W	
R520	1-249-437-11	CARBON	47K	5%	1/4W	
R521	1-249-435-11	CARBON	33K	5%	1/4W	
R522	1-249-429-11	CARBON	10K	5%	1/4W	
R523	1-249-433-11	CARBON	22K	5%	1/4W	
R524	1-249-435-11	CARBON	33K	5%	1/4W	
R525	1-249-429-11	CARBON	10K	5%	1/4W	
R526	1-247-838-00	CARBON	2K	5%	1/4W	
R527	1-249-437-11	CARBON	47K	5%	1/4W	
R601	1-249-423-11	CARBON	3.3K	5%	1/4W	
R602	1-247-881-00	CARBON	120K	5%	1/4W	
R603	1-249-423-11	CARBON	3.3K	5%	1/4W	
R604	1-247-856-00	CARBON	11K	5%	1/4W	
R605	1-249-441-11	CARBON	100K	5%	1/4W	
R606	1-249-441-11	CARBON	100K	5%	1/4W	
R801	1-249-441-11	CARBON	100K	5%	1/4W	
R802	1-249-441-11	CARBON	100K	5%	1/4W	
R803	1-249-437-11	CARBON	47K	5%	1/4W	
R804	1-249-435-11	CARBON	33K	5%	1/4W	
R805	1-249-435-11	CARBON	33K	5%	1/4W	
R806	1-249-435-11	CARBON	33K	5%	1/4W	
R807	1-249-441-11	CARBON	100K	5%	1/4W	
R808	1-249-417-11	CARBON	1K	5%	1/4W	
R809	1-249-441-11	CARBON	100K	5%	1/4W	
R810	1-249-433-11	CARBON	22K	5%	1/4W	
R811	1-249-417-11	CARBON	1K	5%	1/4W	
R820	1-249-417-11	CARBON	1K	5%	1/4W	

Ref. No.	Part No.	Description	Remark
		< VARIABLE RESISTOR >	
RV501	1-230-497-11	RES, ADJ, CARBON 22K	
RV502	1-237-288-11	RES, ADJ, CARBON 47K	
RV503	1-230-497-11	RES, ADJ, CARBON 22K	
RV504	1-230-497-11	RES, ADJ, CARBON 22K	
		< SWITCH >	
S801	1-571-274-11	SWITCH, LEAF (DISC HOLDER DET)	
		< VIBRATOR >	
X801	1-567-775-11	VIBRATOR, CERAMIC (4.19MHz)	
XF301	1-579-345-11	VIBRATOR, CERAMIC (16.9344MHz)	
**********			
*	1-636-789-13	MOTOR BOARD	
		**********	
		< CONNECTOR >	
CN701	1-564-722-11	PIN, CONNECTOR (SMALL TYPE) 6P	
		< SWITCH >	
S701	1-572-085-11	SWITCH, LEAF (LIMIT)	
**********			
*	1-649-472-11	SW BOARD	
		********	
		< JACK >	
* CNJ802	1-566-805-11	CONNECTOR 6P	
* CNJ812	1-563-060-11	CONNECTOR, BOARD IN (DIP) 6P	
		< DIODE >	
D801	8-719-938-69	GL3PR8 (OPR/BATT)	
		< SWITCH >	
S803	1-572-198-11	SWITCH, KEYBOARD (AMS/SEARCH +)	
S804	1-572-198-11	SWITCH, KEYBOARD (AMS/SEARCH -)	
S805	1-572-198-11	SWITCH, KEYBOARD (■)	
S806	1-572-198-11	SWITCH, KEYBOARD (▶II)	
**********			
*	1-649-470-11	VOL BOARD	
		*********	
		< CONNECTOR >	
* CN312	1-564-707-11	PIN, CONNECTOR (SMALL TYPE) 5P	
		< VARIABLE RESISTOR >	
RV301	1-238-430-11	RES, VAR, CARBON 20K/20K (VOLUME)	
**********			

Ref. No.	Part No.	Description	Remark
		MISCELLANEOUS	
		**********	
55	1-452-558-11	MAGNET	
⚠102	8-848-137-11	OPTICAL PICK-UP BLOCK KSS-210B	
M701	X-2625-132-1	MOTOR GEAR ASSY (MB) SLED	
M702	X-2625-133-2	MOTOR ASSY, SPINDLE(TT CHASSIS ASSY(MB))	
SP101	1-504-438-11	SPEAKER (7.7CM)	
SP201	1-504-438-11	SPEAKER (7.7CM)	

****

ACCESSORIES & PACKING MATERIALS

****

	3-757-447-11	MANUAL, INSTRUCTION (ENGLISH, FRENCH, SPANISH, ITALIAN)	
	3-757-447-41	MANUAL, INSTRUCTION (AEP, UK) (GERMAN, DUTCH, SWEDISH, PORTUGUESE)	
*	4-960-279-01	INDIVIDUAL CARTON	
*	4-960-281-01	CUSHION	

****

****

HARDWARE LIST

****

#1	7-685-646-79	SCREW +BVTP 3X8 TYPE2 IT-3	
#2	7-685-648-79	SCREW +BVTP 3X12 TYPE2 IT-3	
#3	7-685-104-19	SCREW +P 2X6 TYPE2 NON-SLIT	
#4	7-621-255-15	SCREW +P 2X3	
#5	7-621-772-10	SCREW +B 2X4	

Note: The components identified by mark ⚠ or dotted line with mark ⚠ are critical for safety.
Replace only with part number specified.

9-959-081-11

Sony Corporation
General Audio Group

English
93G0657-1
Printed in Japan
©1993.7
Published by Audio Sector Quality Assurance Dept.