D-555/Z555

SERVICE MANUAL

US Model
Canadian Model
D-555

AEP Model
UK Model
E Model
D-Z555

Discman

Model Name Using Similar Mechanism	D – 250
CD Mechanism Name	CDM – 555

SPECIFICATIONS

CD section

System	Compact disc digital audio system
Laser diode properties	Material: GaAlAs Wavelength: 780 nm Emission duration: Continuous Laser output: Less than 44.6 µW This output is the value measured at a distance of 200 mm from the objective lens surface on the Optical Pick-up Block.
Error correction	Sony Super Strategy Cross Interleave Reed Solomon Code
D-A conversion	16-bit linear, 8fs digital filter
Frequency response	20 – 20,000 Hz ±1 dB*
Signal-to-noise ratio	More than 90 dB
Wow and flutter	Below measurable limit*
Outputs (at 9 V input level)	
	Line output (stereo minijack) Output level 0.7 V rms at 50 kilohms Load impedance over 10 kilohms
	Optical digital output (optical output connector) Output level: −21 – −15 dBm Wavelength: 630 – 690 nm at peak level
	Headphones (stereo minijack) 9 mW + 9 mW at 32 ohms

* Measured by EIAJ CP-307

General

Power requirements	Supplied rechargeable battery pack (BP-2EX) or BP-100 (optional) DC IN 9 V jack accepts: Supplied AC power adaptor for use on 120V AC, 60 Hz Sony CPM-200P car mount plate (optional) or Sony DCC-120A car battery cord (optional) for use on 12 V car battery
Power consumption	3.2 W DC
Dimension	Approx. 127.6 × 33 × 145 mm (5 × 1 5/16 × 5 11/16 inches) (w/h/d) not incl. inclined part (depth), projecting parts and controls Approx. 130 × 33.8 × 145.5 mm (5 1/8 × 1 5/16 × 5 11/16 inches) (w/h/d) incl. projecting parts and controls
Weight	Approx. 520g (1.2lb) not incl. rechargeable battery Approx. 600g (1.5lb) incl. rechargeable battery (BP-2EX)
Supplied accessories	AC power adaptor (1) Rechargeable battery pack (1) Carrying case (1) Connecting cord (1) (stereo miniplug - two phono plugs)

Design and specifications subject to change without notice.

Notes on AC power adaptor

- Disconnect the AC power adaptor when the unit will not be used.
- Use only the supplied AC power adaptor or the recommended car battery cord manufactured by Sony. Polarity of the plugs of other manufacturers may be different.

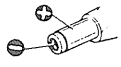

Polarity of the Sony plug

CAUTION

The use of optical instruments with this product will increase eye hazard.

For the Customers in the United Kingdom and European Countries

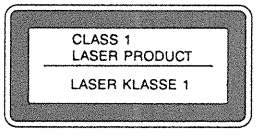

This Compact Disc player is classified as a CLASS 1 LASER product. The CLASS 1 LASER PRODUCT label is located on the bottom exterior.

CAUTION

Use of controls or adjustments or performance of procedures other than those specified herein may result in hazardous radiation exposure.

COMPACT DISC COMPACT PLAYER

SONY®

TABLE OF CONTENTS

SECTION 1
GENERAL

Location and Function of Controls

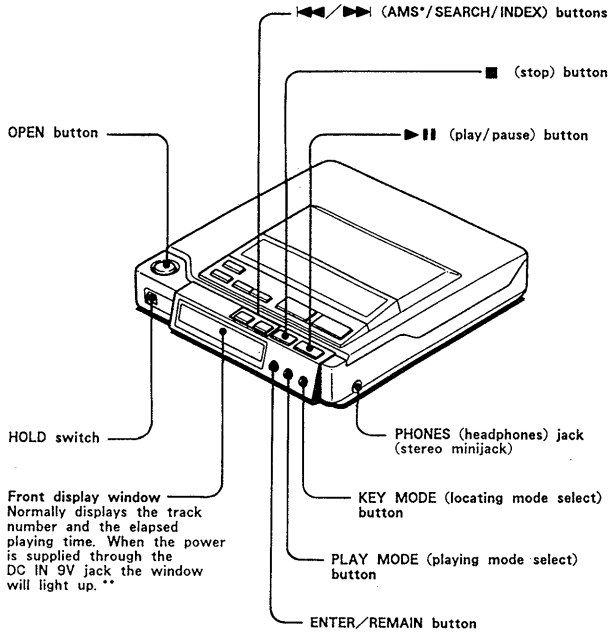

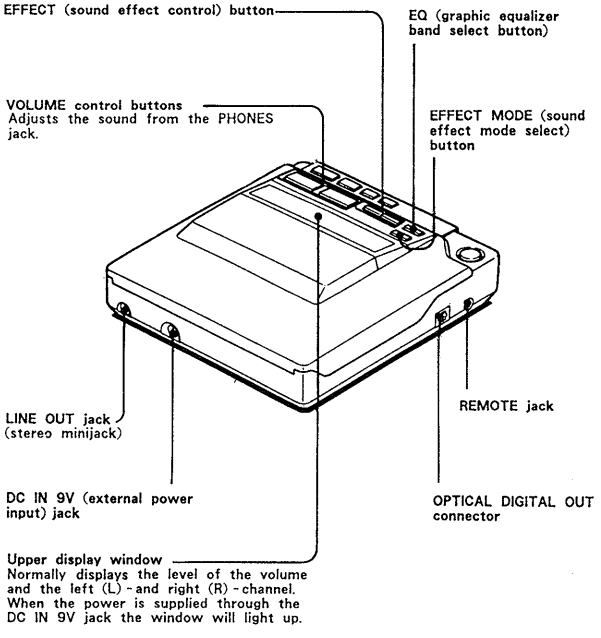

*AMS is the abbreviation of Automatic Music Sensor.

**If lit for a long time, the unit may become warm, but that is not a problem.

SECTION 2
SERVICING NOTES

NOTES ON HANDLING THE OPTICAL PICK-UP BLOCK

The laser diode in the optical pick-up block may suffer electrostatic breakdown because of the potential difference generated by the charged electrostatic load, etc. on clothing and the human body.
During repair, pay attention to electrostatic breakdown and also use the procedure in the printed matter which is included in the repair parts.

Flexible Circuit Board Repairing

1. Keep the temperature of the soldering iron at 270° ± 10°C during repairing.
2. Do not touch the soldering iron more than 4 seconds or 3 times on the same conductor of the circuit board.
3. Do not apply force on the conductor when soldering or unsoldering.

Notes on chip component replacement

- Never reuse a disconnected chip component.
- Notice that the minus side of a tantalum capacitor may be damaged by heat.

Before Replacing the Optical Block

Please be sure to check thoroughly the parameters as par the "Optical Block Checking Procedures" (Part No.: 9-960-027-11) issued separately before replacing the optical block.
Note and specifications required to check are given below.

- FOK output: IC501 (9) pin
  When checking FOK, remove the lead wire to disc motor and unsolder and open IC801 (24) pin.
- S carve P-to-P value: 2.95 Vp-p
- Adjusted part for focus gain adjustment: RV505
- RF signal P-to-P value: 0.75 – 1.4 Vp-p
- Traverse signal P-to-P value: 1.8 Vp-p
- The grating holder can not repair.
- Adjusted part for tracking gain adjustment: RV501

SAFETY-RELATED COMPONENT WARNING!!

COMPONENTS IDENTIFIED BY MARK ⚠ OR DOTTED LINE WITH MARK ⚠ ON THE SCHEMATIC DIAGRAMS AND IN THE PARTS LIST ARE CRITICAL TO SAFE OPERATION. REPLACE THESE COMPONENTS WITH SONY PARTS WHOSE PART NUMBERS APPEAR AS SHOWN IN THIS MANUAL OR IN SUPPLEMENTS PUBLISHED BY SONY.

ATTENTION AU COMPOSANT AYANT RAPPORT À LA SÉCURITÉ!

LES COMPOSANTS IDENTIFIÉS PAR UNE MARQUE ⚠ SUR LES DIAGRAMMES SCHÉMATIQUES ET LA LISTE DES PIÈCES SONT CRITIQUES POUR LA SÉCURITÉ DE FONCTIONNEMENT. NE REMPLACER CES COMPOSANTS QUE PAR DES PIÈCES SONY DONT LES NUMÉROS SONT DONNÉS DANS CE MANUEL OU DANS LES SUPPLÉMENTS PUBLIÉS PAR SONY.

NOTES ON LASER DIODE EMISSION CHECK

The laser beam on this model is concentrated so as to be focused on the disc reflective surface by the objective lens in the optical pick-up block. Therefore, when checking the laser diode emission, observe, from more than 30 cm away from the objective lens.

Laser Diode Check Procedure

The laser diode on this set will not emit unless the top panel is closed and S901 (leaf SW type) is turned on. The laser diode will always emit even if focus search is not performed in service mode.
The laser diode is checked using the current value which flows to the laser diode inside the UPF.

Procedure 1 (service mode or normal operation)
Check the laser diode emission with the eye.

1. Open upper panel.
2. S901 on as Fig. 1.
   (In service mode, this operation is not necessary.)
3. Press the ▶II key.
   (In service mode, this operation is not necessary.)
4. Observe the objective lens and confirm that the laser diode is emitting light. At this time, the laser diode goes on about 10 seconds due to focus serarch. If it does not, APC circuit or UPF is defective.

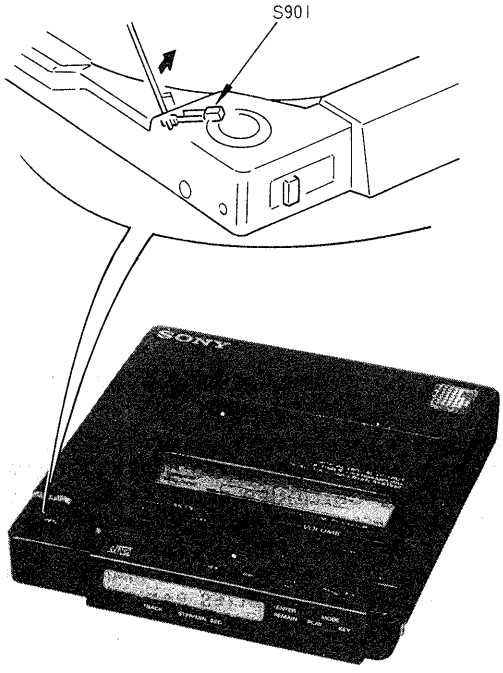

Fig. 1 Turning S901 on

Procedrue 2 (service mode or normal operation)
Check by the curent with flows in the laser diode.

1. Close the top panel.
2. Remove the main board and read the current value on the label affixed to the UPF.
   (Label on UPF)

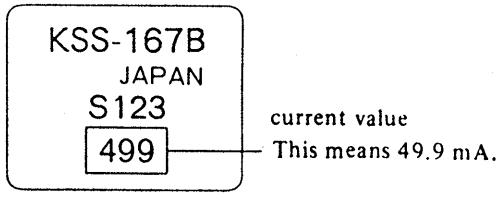

   The current value varies with the set.
3. Connect a VOM as shown in Fig. 2.
4. Press the ▶II key.
5. Calculate the current by the VOM reading.
   VOM reading (V) ÷ 10 = current (A)
   ex. VOM reading = 0.49 V
   0.49 ÷ 10 = 0.049 (A) = 49 (mA)
6. Confirm that the ammeter reading is within the range given below.
   value on label $^{+5}_{-11}$ mA (25°C)
   variation relative to temperature:
   0.4 mA/°C
   (Current increases when temperature rises and decreases when it drops.)
   If the value is more than the range given, APC circuit has been defective or the laser diode has deteriorated. If it is less, APC circuit or UPF is defective.

— servo board —

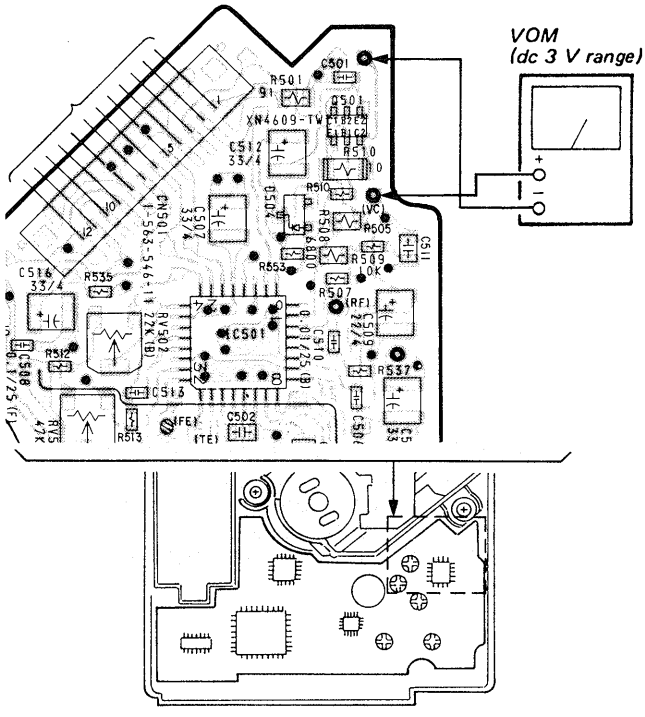

Fig. 2 VOM Connection

SERVICE MODE (service program)

This set has built-in service program in the micro-computer as usual sets.
The operation method of service program is explained below.

[ ]: *Main operation in service mode for details, refer to step 2.*

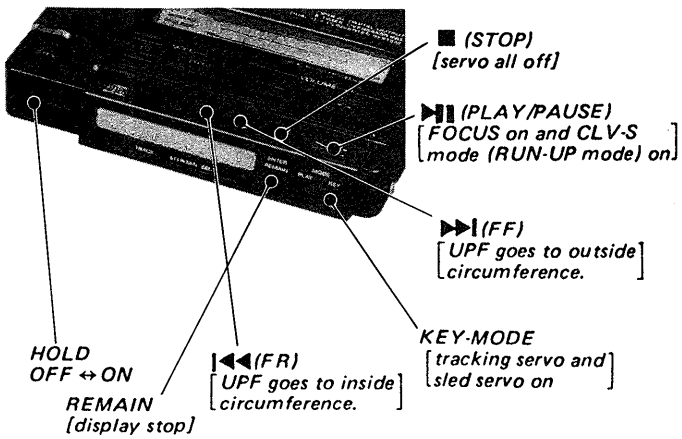

Be sure to set HOLD switch OFF.
If not key inputs can not be operated.

Fig. 3 Key Positions

Step 1 (Service Mode setting method)

1. Turn the HOLD switch OFF with the external power supply not plugged in (no power applied to set) and press the ▶II key.
2. Solder jumper TEST point.
   (IC801 pin ⑨ (BAT-E) pin is grounded.
3. Plug in external power supply.
   This puts the set into service mode.

Step 2 (Service Mode operation)

1. When service mode is set, the display will change 6 times, and those 6 changes will be repeated over and over.
   With this the LCD display should be present in service mode. Even if LCD does not display, other operations will be performed.
2. When ▶▶I or I◀◀ key is pressed, the UPF moves to the inside or outside circumference. Tracking servo and sled servo go off when this is done, so press KEY-MODE to turn on the tracking servo if necessary.
3. When REMAIN is pressed, the display stops. When REMAIN is released, the display continues to change. This allows check of each segment.
4. When ▶II key is pressed, CLV-S (pull-in mode) starts while performing focus search. When there is no disc installed, focus search is repeated several times while disc motor is rotating.
5. When KEY-MODE is pressed, tracking servo, sled servo and CLV-A (servo during PLAY) go ON.
6. When 4 and 5 are performed, the disc begins to play. At this time, the top panel should be closed and S901 are to be ON.
7. All servo (focus, tracking, sled and spindle) go off when ■ key is pressed. But disc motor continues rotating for a while by inartia.

Step 3 (Service Mode release)

1. First be sure to unplug the external power supply, then remove the TEST point solder jumper.
2. The set will now operated normally.

– main board –

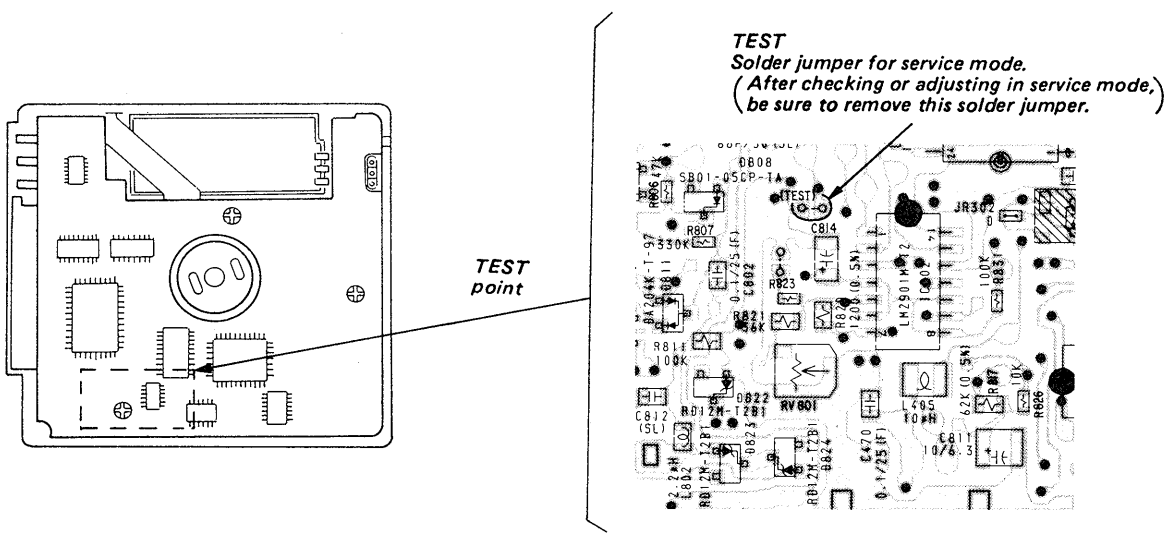

Fig. 4 TEST Point Position

SECTION 3
ELECTRICAL ADJUSTMENTS

Notes on Adjustment

1. Perform adjustments except for RECHARGEABLE VOLTAGE ADJUSTMENT and BATTERY DISPLAY ADJUSTMENT in service mode. Be sure to release service mode after completing adjustment.
   (Refer to "Service Mode (service program)" on page 5.)
2. Perform adjustments in the order given.
3. Use YEDS-18 disc (part No.: 3-702-101-01) unless otherwise indicated.
4. Power supply voltage: DC 9 V
   HOLD switch: OFF

PREPARATION

Put the set into service mode (see page 5) and perform the following checks. Repair if there are any abnormalities.

- **Sled Motor Check**

1. Press the OPEN button and open the top panel.
2. Press the ▶▶| , |◀◀ keys and make sure that the UPF moves smoothly, without catching, from the inmost → outmost → inmost circumference.
   ▶▶| : UPF moves outward
   |◀◀ : UPF moves inward

- **Focus Search Check**

1. Press the OPEN button and open the top panel.
2. Press the ▶II key. (Focus search is performed continuously.)
3. Observe the UPF objective lens and check that it moves smoothly up and down with no catching or noises.
4. Press the ■ key.
   Check that focus search operation stops. If it does not stop, press the ■ key again longer than before. But disc motor continues rotating for a while by inartia.

VC (1/2 Vcc) Connecting Point

FOCUS BIAS ADJUSTMENT
TRACKING BALANCE ADJUSTMENT

When the adjustments above are performed, connect the ⊖ side of oscilloscope to the point below.

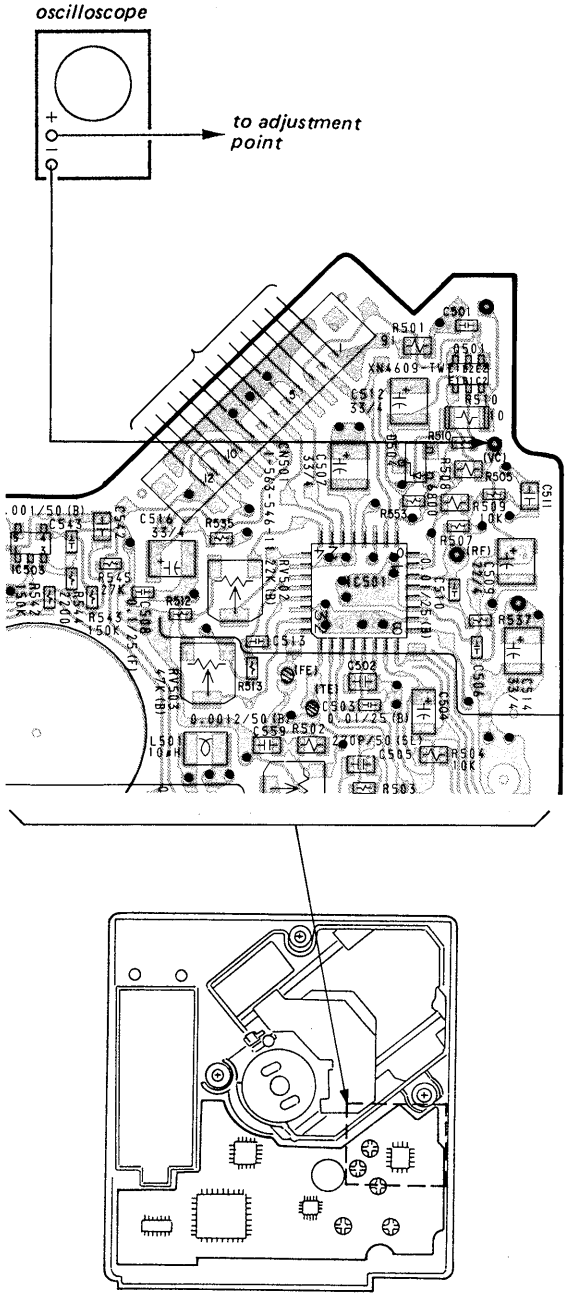

Battery Display Adjustment

Adjustment Procedure:

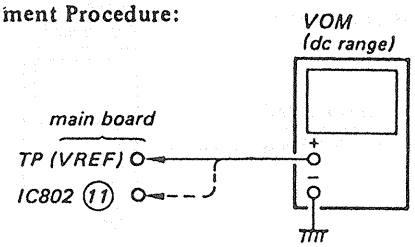

1. Apply dc +3.5 V to terminals for bult in battery (BP-2).
2. Insert the disc (YEDS-18) and put the set into play mode.
3. Adjust RV801 so that main board IC802 (11) voltage and TP (VREF) voltage are equal.
4. If IC802 (11) voltage is heigher than TP (VREF) voltage when turning the RV801 fully counter-clockwise, short the jumper point (A) as shown below and adjust RV801.

Adjustment Location: main board

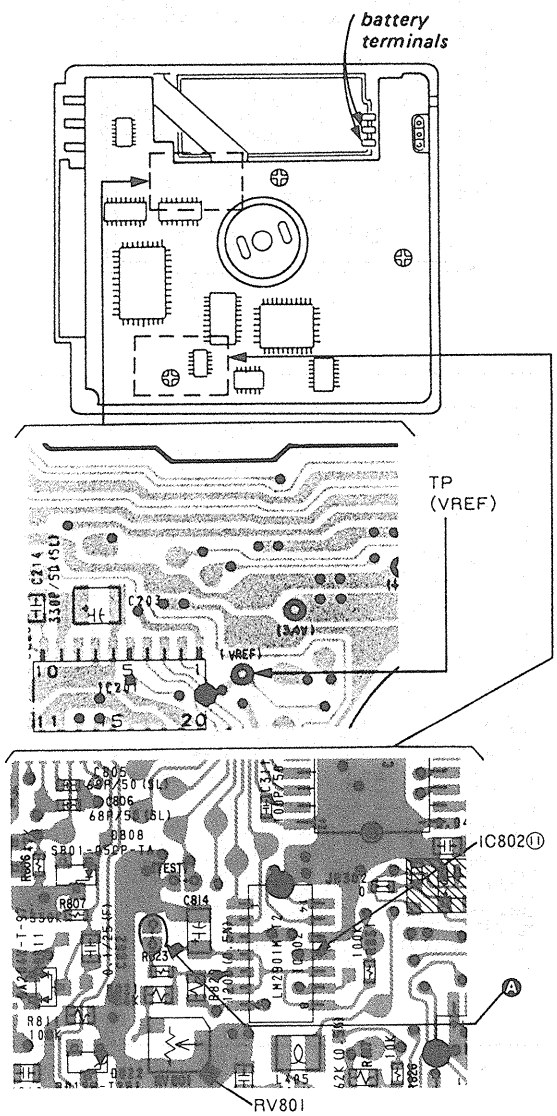

+ 5.2 V Adjustment

Adjustment Procedure:

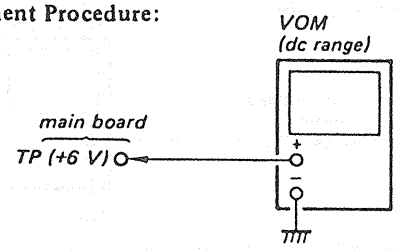

1. Put the set into service mode (see page 5).
2. Connect the VOM to main board TP (+ 5.2 V).
3. Adjust RV401 for + 5.2 ±0.1 V reading on the VOM.
4. After adjustment, release service mode (see page 5).

Adjustment Location: main board

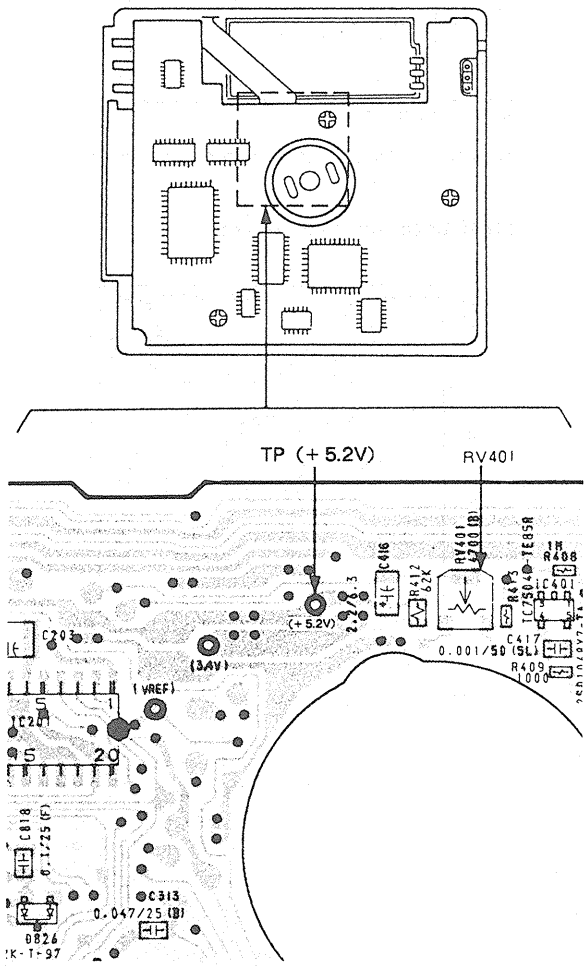

+3.4 V Adjustment

Adjustment Procedure:

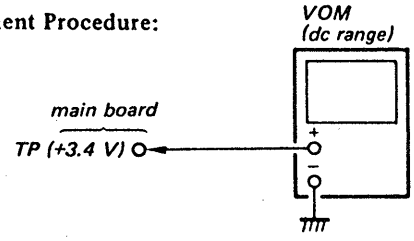

1. Put the set into service mode (see page 5).
2. Connect the VOM to main board test point TP (+3.4 V).
3. Adjust the pattern connecting (Ⓐ or Ⓑ) to obtain 3.5 to 3.7 V reading on the VOM.

pattern connection		VOM reading
Ⓐ	Ⓑ	
O	X	down
X	X	↕
X	O	↕
O	O	up

O: short X: open

4. After adjustment, release service mode (see page 5).

Adjustment Location: main board

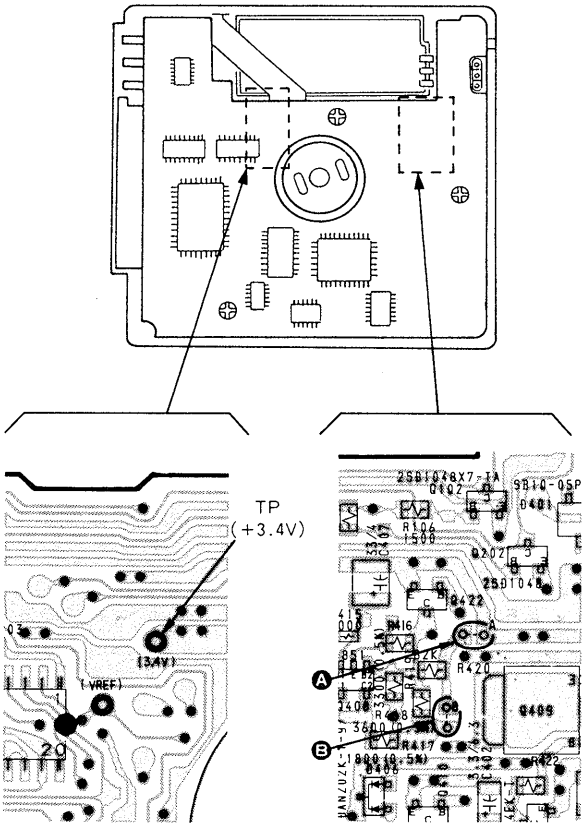

Rechargeable Voltage Adjustment

Adjustment Procedure:

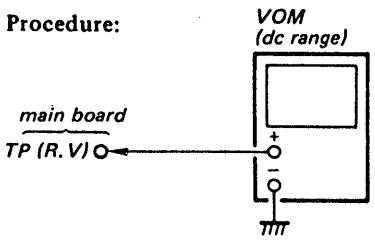

1. Connect the VOM to main board test point TP (R.V).
2. Apply DC 9 V with requrated dc power supply from external power jack CN401.
3. Adjust RV402 for 7.05 – 7.5 V reading on the VOM.

Note: Measure after the VOM reading becomes stable.

Adjustment Location: main board

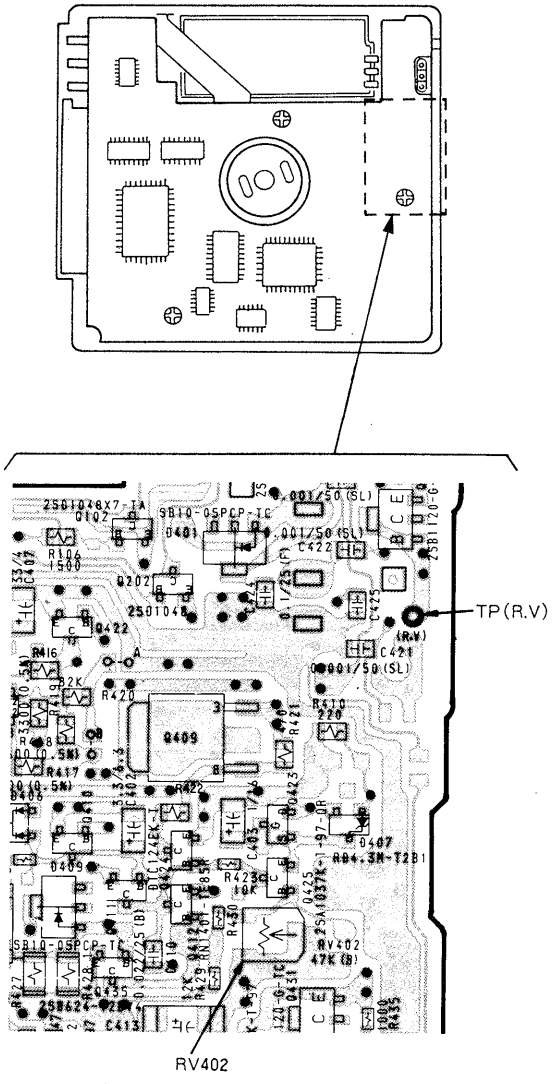

PLL Free Run Frequency Check and Adjustment

Check/Adjustment Procedure:

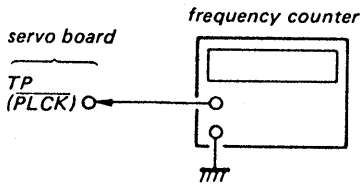

1. Disconnect the jumper point Ⓐ (EFM) in the diagram below.
2. Connect a frequency counter to servo board test point TP ($\overline{\text{PLCK}}$).
3. Put the set into service mode (see page 5).
4. Check that the frequency counter reading is 4.310 ±0.01 MHz. If not, adjust RV504 so that it is 4.310 ±0.01 MHz.
5. After adjustment, release service mode (see page 5).
6. Short the jumper point shorted in step 1.

Check/Adjustment Location: servo board

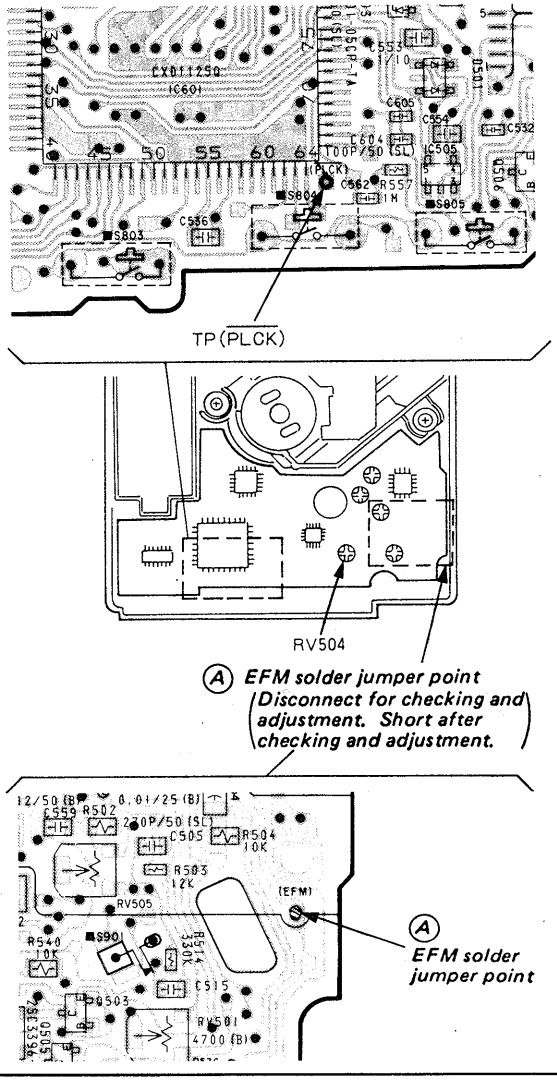

Tracking Balance Adjustment

Conditions:

The set should be placed either horizontally.

Adjustment Procedure:

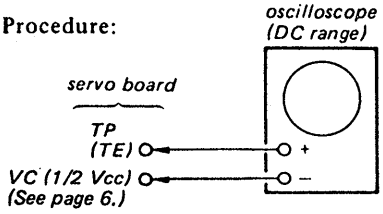

1. Connect the oscilloscope to servo board TP (TE).
2. Put the set into service mode (see page 5).
3. Press the ▶▶| and |◀◀ keys to move the UPF to the center.
4. Insert the disc (YEDS-18) and close the top panel.
5. Press the ▶II key.
   (It will go from focus search to focus on, and CLV pull-in mode state. Tracking and sled are OFF.)
6. Adjust RV502 so that the oscilloscope waveform is symmetrical on the top and bottom in relation to 0 V.
   Note: Take sweep time as long as possible to obtain best waveform.

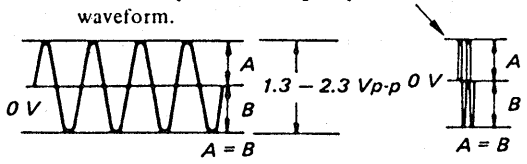

7. Unplug the external power supply to stop spindle motor from rotating.
8. After adjustment, release service mode (see page 5).

Adjustment Location: servo board

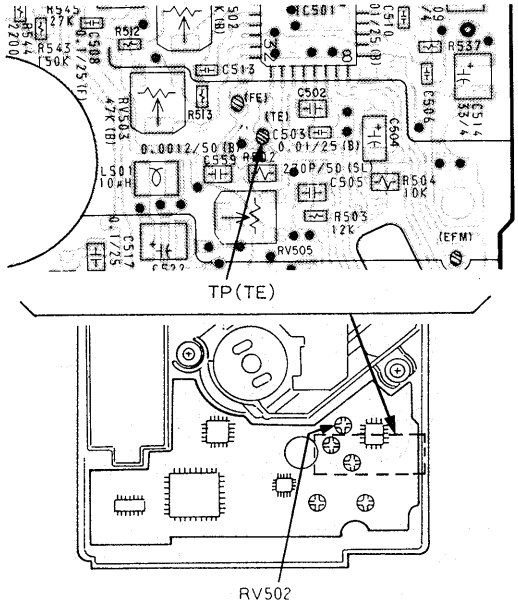

Focus Bias Adjustment

Conditions:
The set should be placed either horizontally.

Adjustment Procedure:

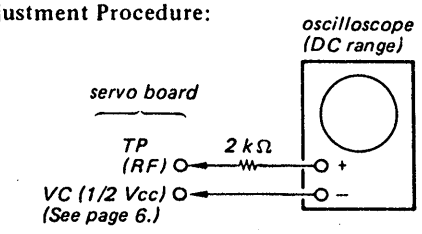

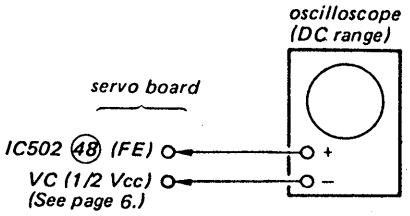

1. Put the set into service mode (see page 5).
2. Connect the oscilloscope to servo board test point TP (RF).
3. Press the ▶▶I and I◀◀ keys to move the UPF to the center. (Move the UPF to the music area on the disc to enable easy visibility of the eye pattern).
4. Insert the disc (YEDS-18) and close the top panel.
5. Press the ▶II key.
   (It will go from focus search to focus on, and CLV pull-in mode state. Tracking and sled are OFF.)
6. Press the KEY-MODE button. (Tracking and sled go ON.)
7. Adjust RV503 so that the oscilloscope waveform eye pattern is good. A good eye pattern means that the diamond shape (◇) in the center of the waveform can be clearly distinguished.

- **RF Signal Reference Waveform (eye pattern)**

VOLT/DIV: 200 mV
TIME/DIV: 500 nS

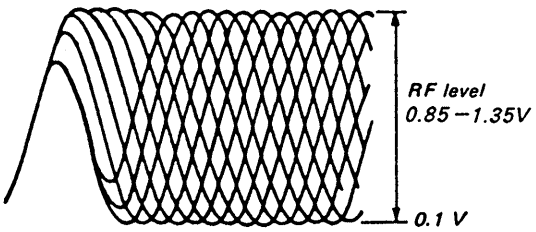

When observing the eye pattern, set the oscilloscope for AC range and raise vertical sensitivity.

8. Push the ■ (STOP) button spindle motor from rotating and remove the disc.
9. Remove the disc and connect the oscilloscope to main board IC502 (48) (FE).
10. Adjust RV503 again refering to the table followed.

oscilloscope reading	adjustment
more than + 70mV	Not adjust again.
+ 70mV to 0 mV	Adjust RV503 again for + 70mV reading on oscilloscope.
0mV to –20 mV	Adjust RV503 again for –20 mV reading on oscilloscope.
less than –20 mV	Not adjust again.

11. After adjustment, release service mode (see page 5).

Adjustment Location: servo board

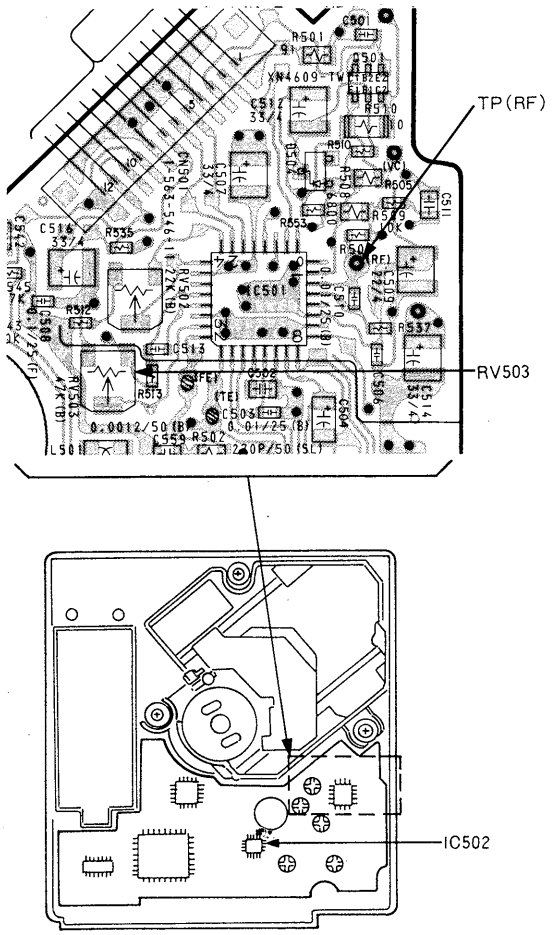

Focus/Tracking Gain Adjustment

A frequency responce analyzer or CD jig is necessary in order to perform this adjustment exactly.
However, this gain has a margin, so even if it is slightly off, there is no problem. Therefore, do not perfrom this adjustment.
Focus/tracking gain determines the pick-up followup (vertical and horizontal) relative to mechanical noise and metchnical shock when the 2-axis device operate. However, as these reciprocate, the adjustment is at the point where both are satisfied.

- When gain is high, the noise when the 2-axis device operates increases.
- When gain is low, it is more susceptible to mechanical shock and skipping occurs more easily.

This adjustment is to be performed when replacing the following parts:

- optical pick-up block
- RV505 (focus gain VR)
- RV501 (tracking gain VR)

Be careful not to move RV505 (focus gain volume) and RV501 (tracking gain volume) ordinarily.

On this set, it is very difficult to simplify this adjustment. For those sets on which symptoms such as "occasional skipping" are hard to discover, or it is hard to tell if the set has been repaired, use the CD jig and perform this adjustment. Refer to the diagram below for connection of the CD jig. The adjustment procedure is described in the separate CD Jig Instruction Manual.

CD Jig Connecting Procedure:
Remove the solder jumpers at the TE and FE locations and connect the DC jig.
(Connect the points on both TE and FE located on the side of IC501 to the output to the CD jig, and points located on the side of volumes to the input from the CD jig.)

— servo board —

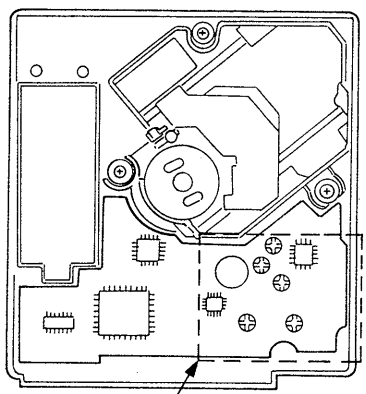

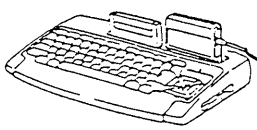

CD jig

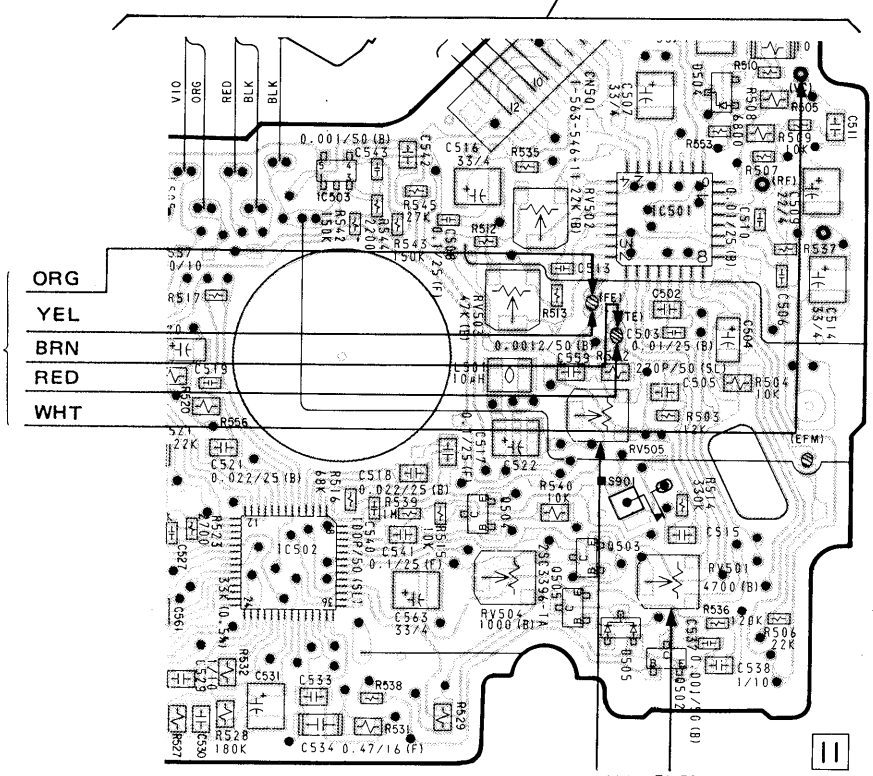

SECTION 4
DIAGRAMS

4-1. WAVEFORMS

❶
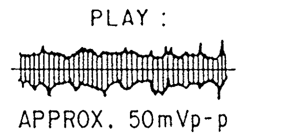

❷
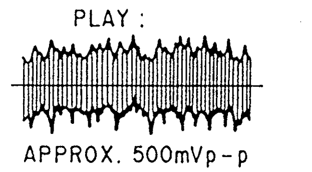

❸
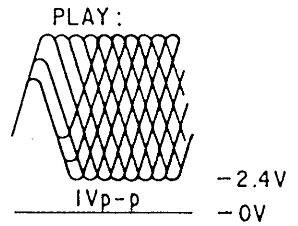

❹
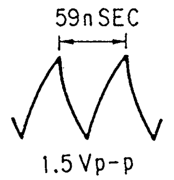

❺
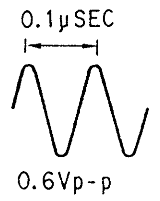

❻
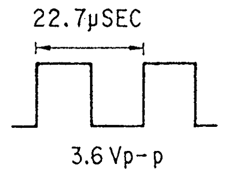

❼
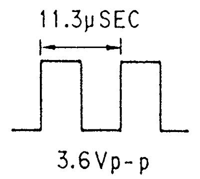

❽
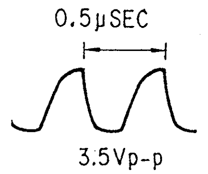

❾
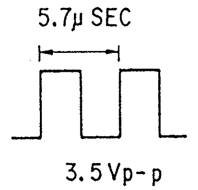

❿
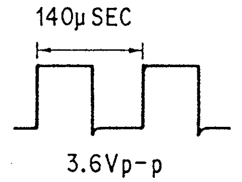

⓫
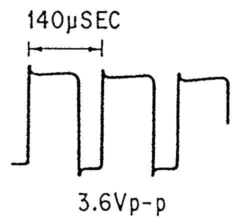

⓬
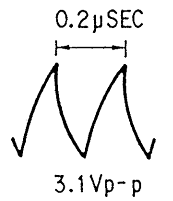

⓭
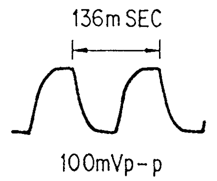

⓮
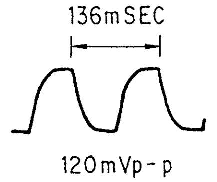

⓯
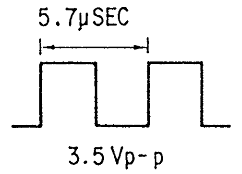

⓰
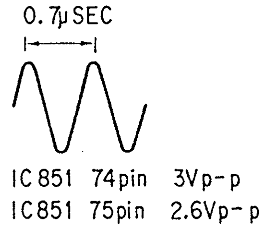

⓱
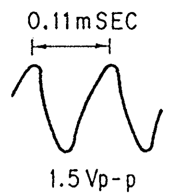

⓲
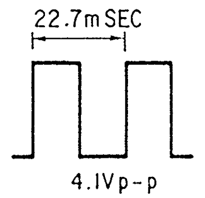

⓳
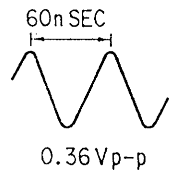

⓴
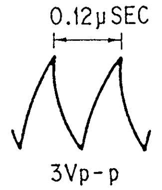

㉑
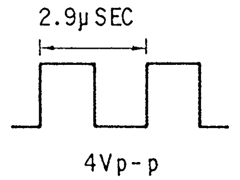

㉒
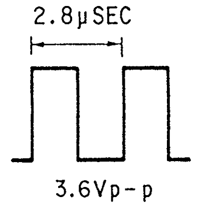

㉓
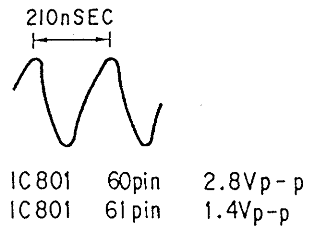

㉔
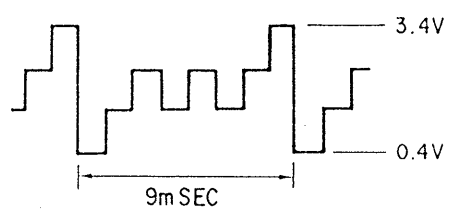

4-2. BLOCK DIAGRAM

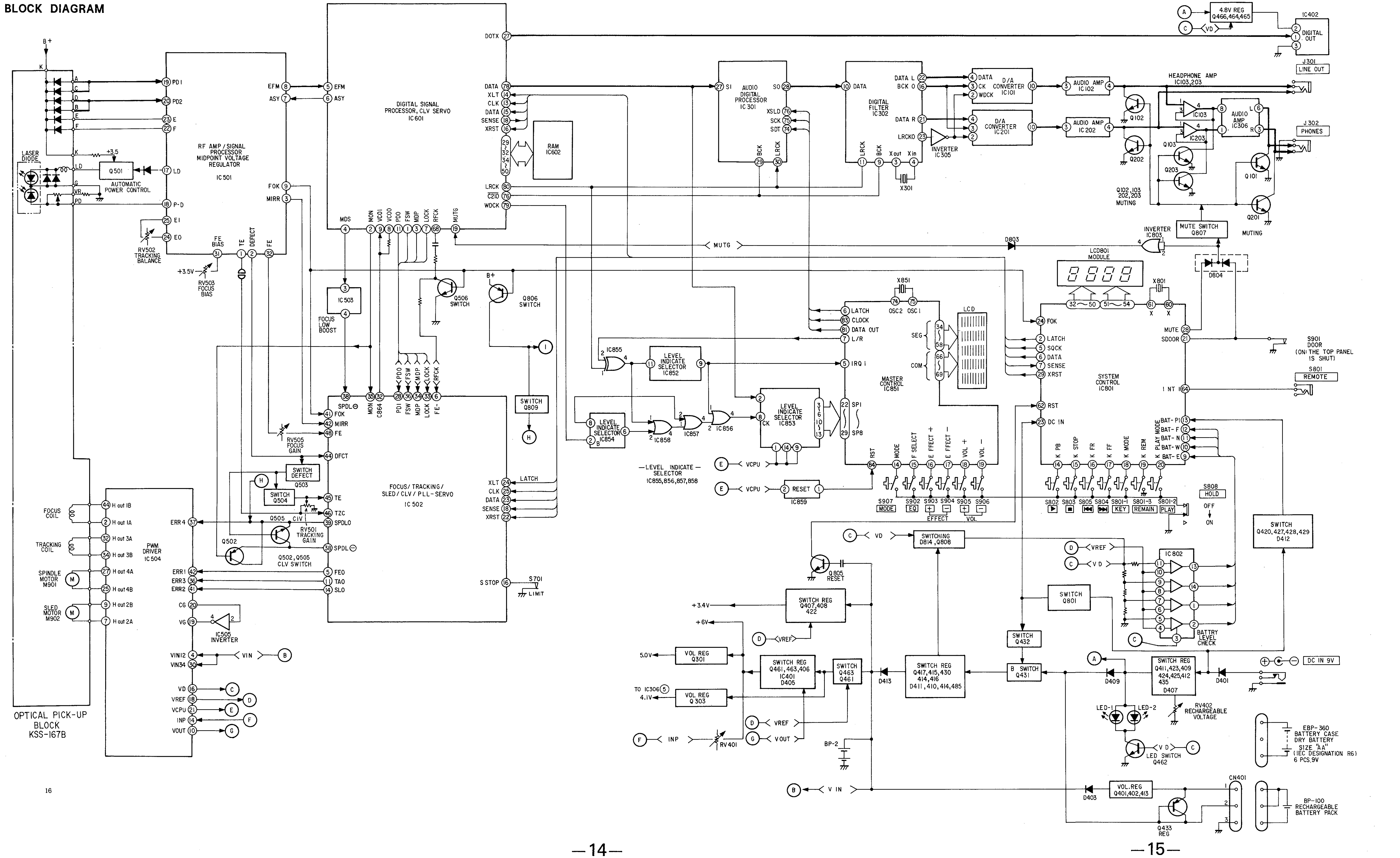

4-3. PRINTED WIRING BOARD —MAIN SECTION—

• See page 30 for Semiconductor Lead Layouts.

• Semiconductor Lead Layouts

Ref. No.	Location	Ref. No.	Location
D301	A-8	IC802	G-13
D302	A-2	IC803	F-9
D303	A-2	IC851	F-22
D304	B-8	IC852	H-15
D305	H-16	IC853	F-21
D401	C-17	IC854	H-14
D403	B-17	IC855	H-15
D405	D-15	IC856	G-14
D406	E-16	IC857	H-14
D407	E-18	IC858	H-14
D409	E-16	IC859	G-21
D410	F-16		
D411	G-16	Q101	B-9
D412	F-16	Q102	C-17
D413	G-17	Q103	D-8
D414	F-18	Q201	B-8
D415	G-17	Q202	D-17
D450	F-15	Q203	C-8
D485	F-16	Q301	D-12
D801	F-8	Q303	C-7
D803	F-8	Q401	C-18
D804	F-8	Q402	B-17
D805	G-11	Q403	F-16
D807	G-11	Q406	D-15
D808	G-12	Q407	D-16
D809	F-7	Q408	D-16
D810	F-7	Q409	D-17
D811	G-12	Q410	E-16
D813	G-11	Q411	E-17
D814	G-6	Q412	E-17
D822	H-12	Q413	C-18
D823	H-12	Q414	G-16
D824	H-12	Q415	G-17
D825	G-11	Q416	F-17
D826	E-13	Q417	F-17
D901	A-20	Q418	F-17
D902	A-20	Q420	F-15
D903	A-20	Q421	F-16
D904	A-21	Q422	D-16
D905	A-21	Q423	E-17
D906	A-22	Q424	F-17
D907	A-22	Q425	E-17
D908	A-22	Q427	F-16
D909	A-23	Q428	F-16
D910	A-23	Q429	F-16
D911	A-24	Q430	F-16
D951	G-10	Q431	F-17
D952	F-10	Q432	F-17
D954	E-10	Q433	C-18
D955	D-10	Q435	E-17
		Q461	D-15
IC101	D-11	Q462	G-17
IC102	C-11	Q463	D-16
IC103	D-9	Q464	E-16
IC201	D-12	Q465	E-16
IC202	D-12	Q466	E-15
IC203	D-8	Q801	F-7
IC301	F-14	Q804	G-8
IC302	F-13	Q805	G-11
IC305	E-7	Q806	G-9
IC306	B-11	Q807	E-9
IC401	C-15	Q808	H-8
IC402	H-7	Q809	G-8
IC801	F-11		

Note:

- ● : Through hole.
- ▒ : Pattern on the side which is seen.
- ▒ : Pattern of the rear side.

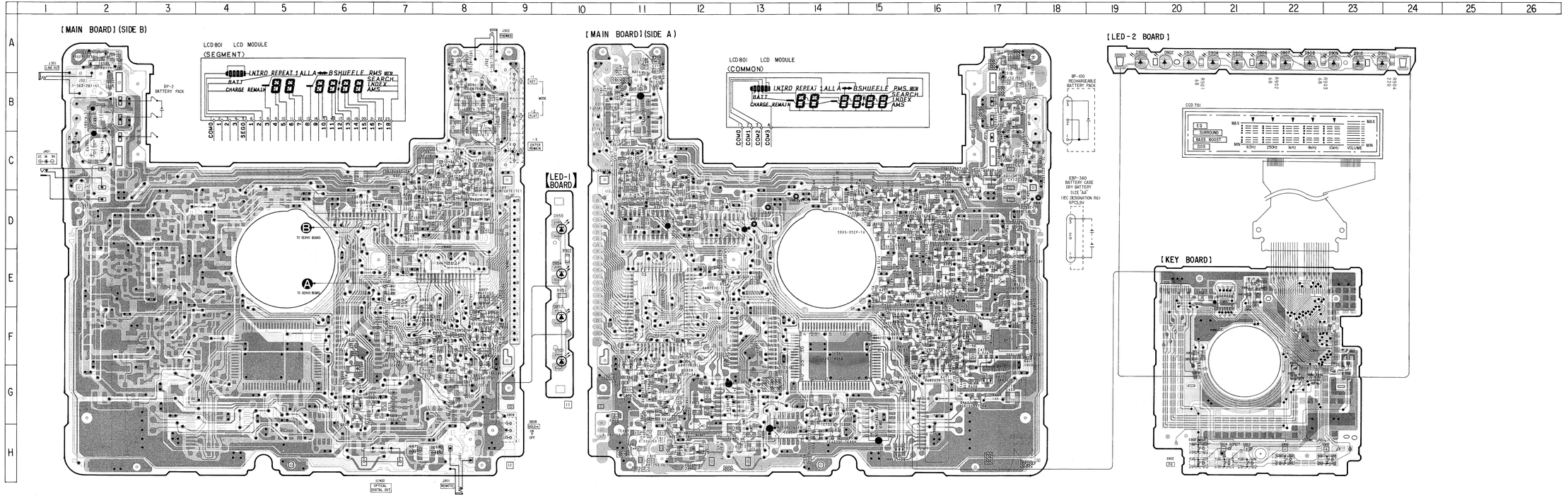

4-4. SCHEMATIC DIAGRAM —MAIN SECTION—

• See page 12 for waveforms. • See page 31 for IC block diagram.

Note:
- All capacitors are in μF unless otherwise noted. pF: μμF 50WV or less are not indicated except for electrolytics and tantalums.
- All resistors are in Ω and ¼W or less unless otherwise specified.
- % : indicates tolerance.

Note: The components identified by mark ⚠ or dotted line with mark ⚠ are critical for safety. Replace only with part number specified.

- ▭ : B+ Line
- ▭ : adjustment for repair.

- Power voltage is dc 9V and fed with regulated dc power supply from external power voltage jack.
  - no mark : stop
  - ( ) : play
  - < > : values when a power supply of 9V dc supplied from the battery terminal.
- Voltages are taken with a VOM (Input impedance 10MΩ).
- Circled numbers refer to waveforms.
- Signal path.
  - ⇒ : CD

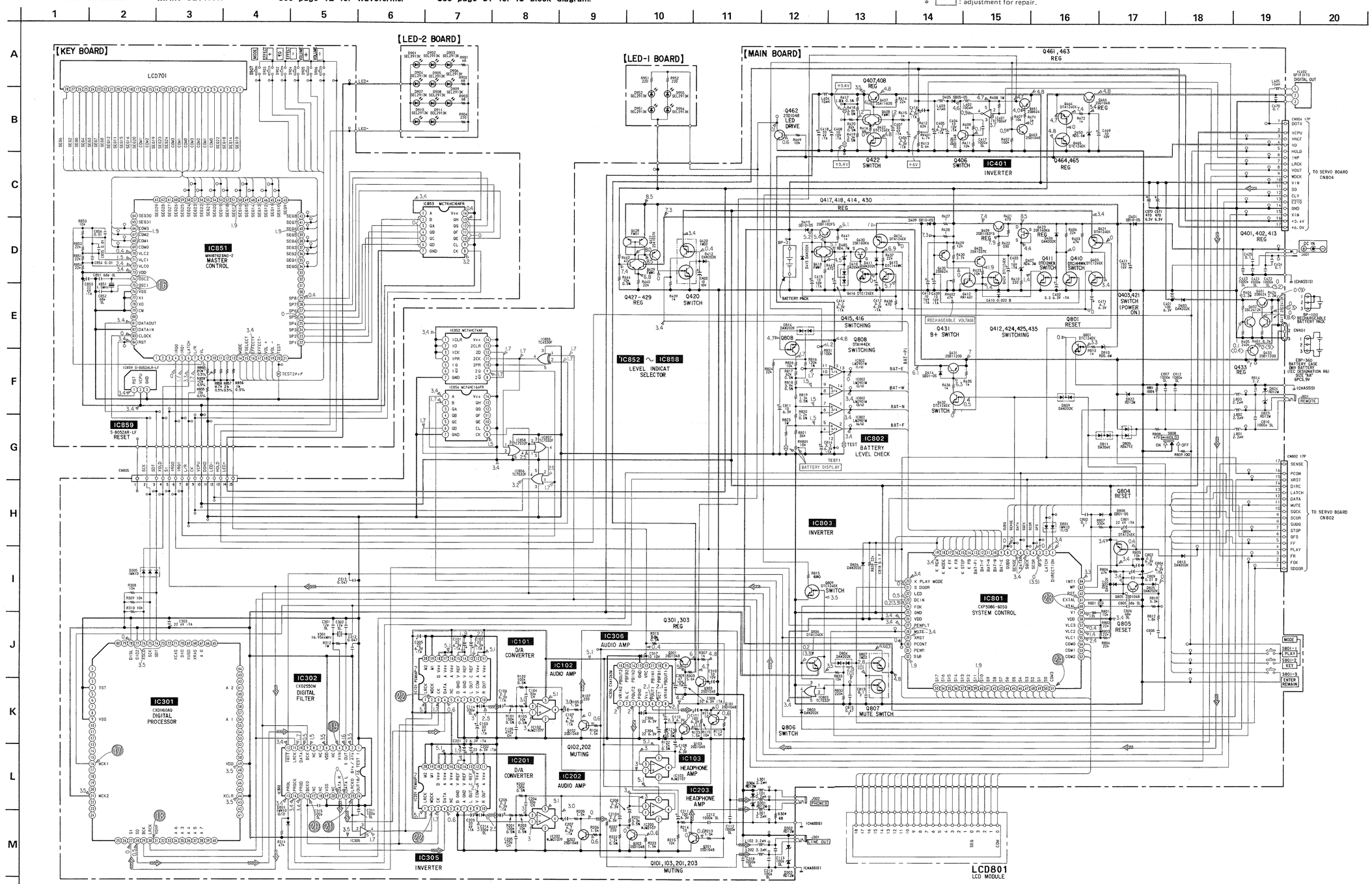

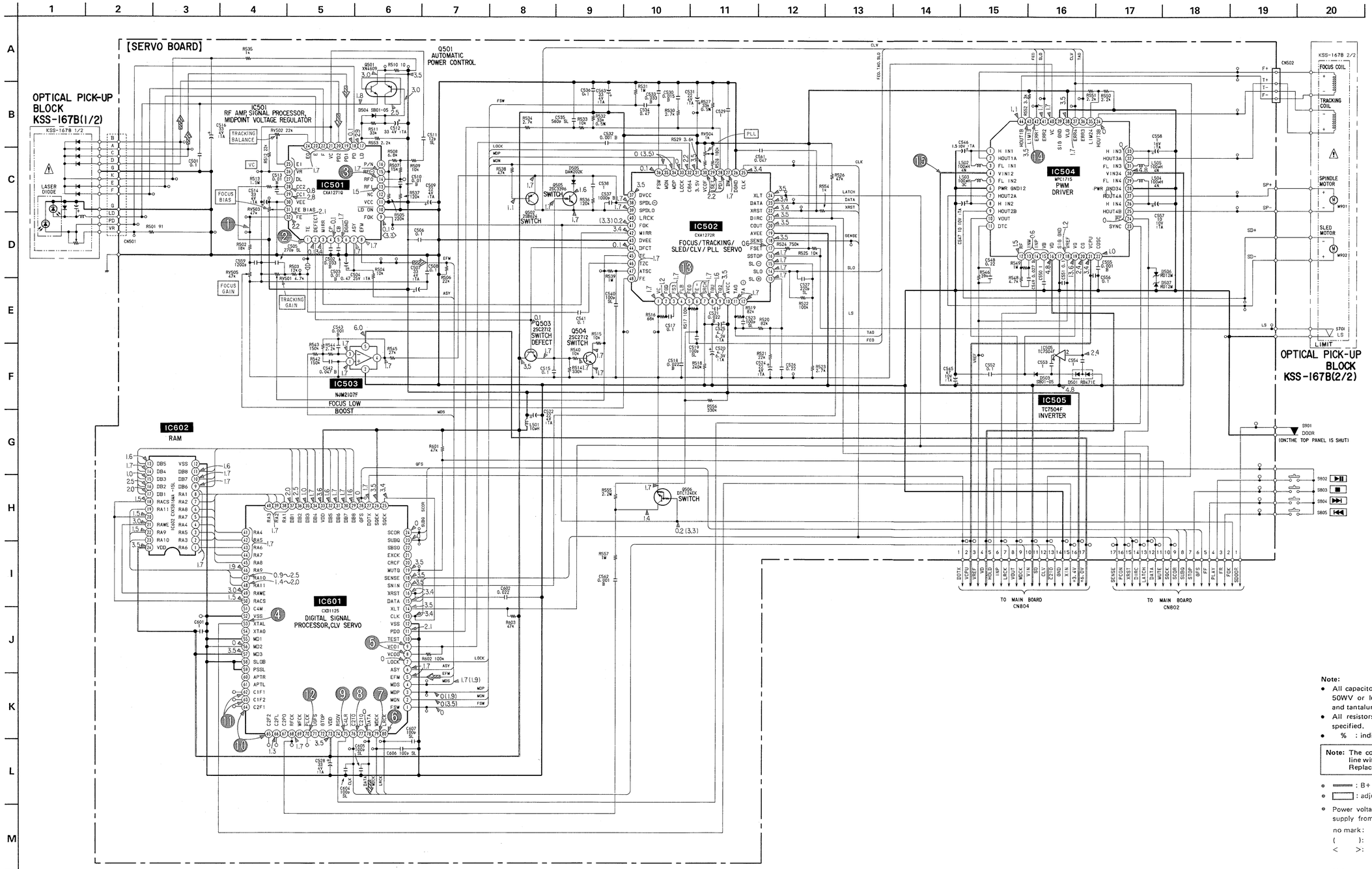

Note:
- All capacitors are in μF unless otherwise noted. pF: μμF 50WV or less are not indicated except for electrolytics and tantalums.
- All resistors are in Ω and ¼W or less unless otherwise specified.
- % : indicates tolerance.

Note: The components identified by mark ⚠ or dotted line with mark ⚠ are critical for safety. Replace only with part number specified.

- ▬▬ : B+ Line
- ▭ : adjustment for repair.
- Power voltage is dc 9V and fed with regulated dc power supply from external power voltage jack.
  - no mark : stop
  - ( ) : play
  - < > : values when a power supply of 9V dc supplied from the battery terminal.
- Voltages are taken with a VOM (Input impedance 10MΩ).
- Circled numbers refer to waveforms.
- Signal path.
  - ⇨ : CD

4-6. PRINTED WIRING BOARD —SERVO SECTION—

• See page 30 for Semiconductor Lead Layouts.

• Semiconductor Location

Ref. No.	Location
D501	E-4
D503	D-4
D504	B-8
D505	E-7
D506	D-4
D507	D-4
IC501	C-8
IC502	D-6
IC503	C-6
IC504	C-4
IC505	E-4
IC601	D-3
IC602	E-2
Q501	B-8
Q502	E-8
Q503	D-7
Q504	D-7
Q505	E-7
Q506	E-5

Note:
- ● : Through hole.
- ▒ : Pattern on the side which is seen.
- ▒ : Pattern of the rear side.

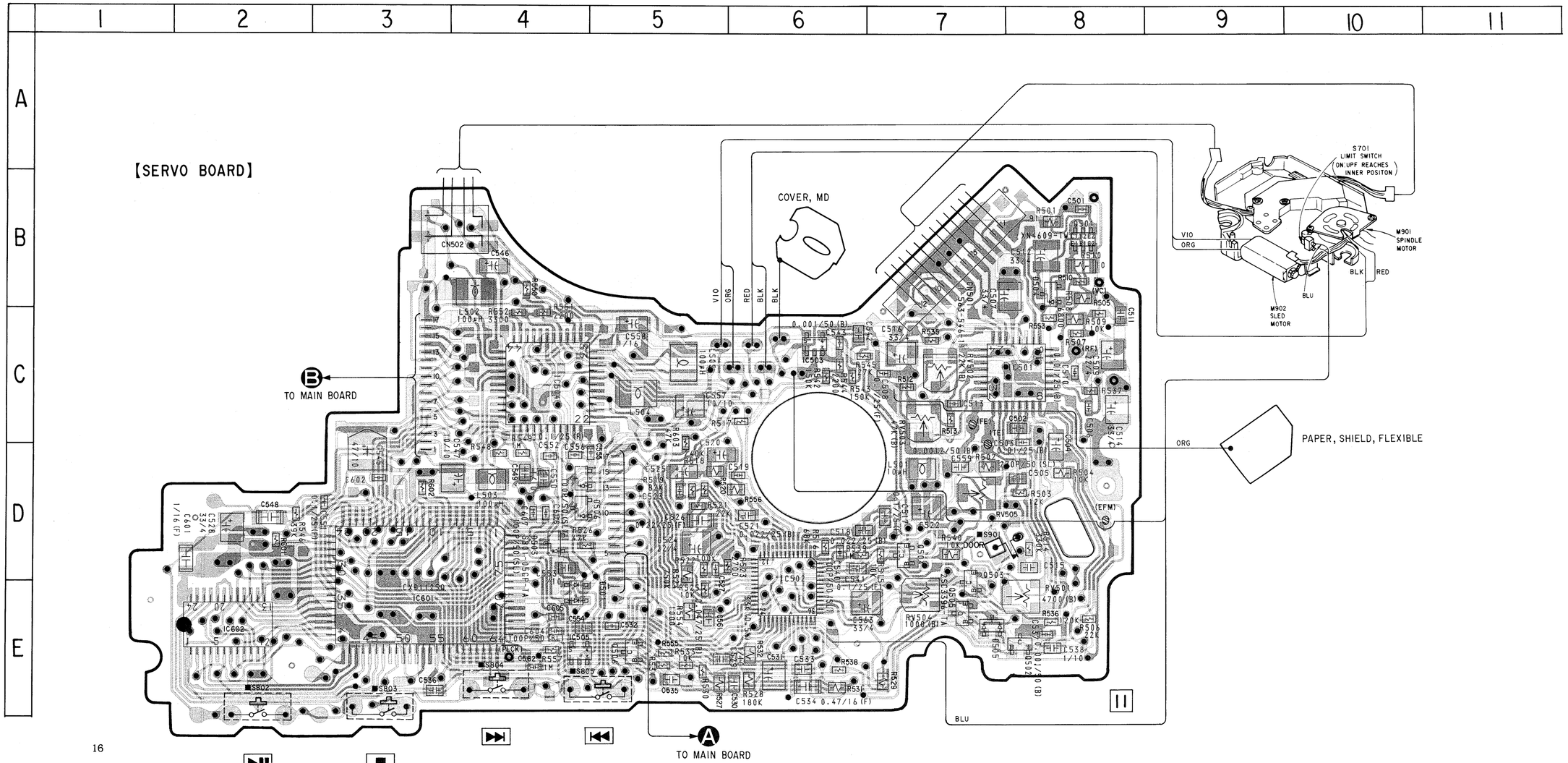

• CIRCUIT BOARD LOCATION

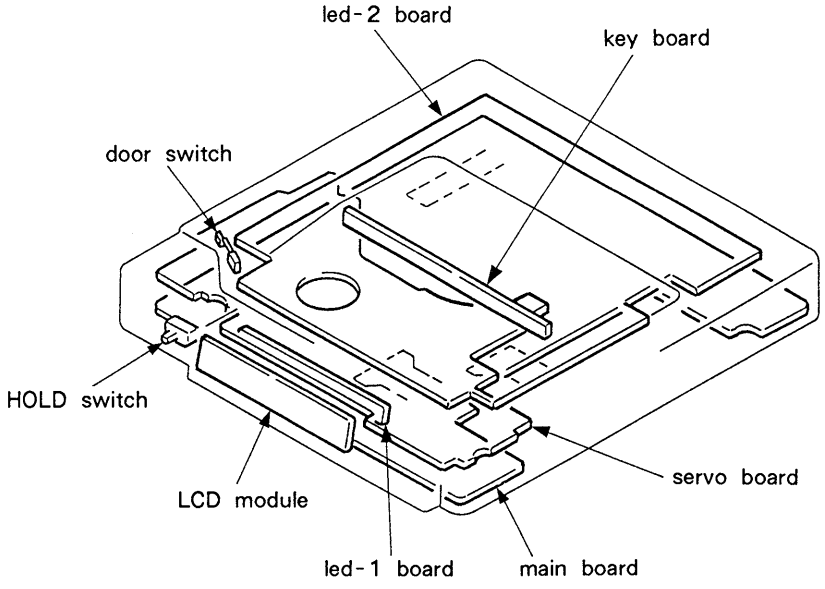

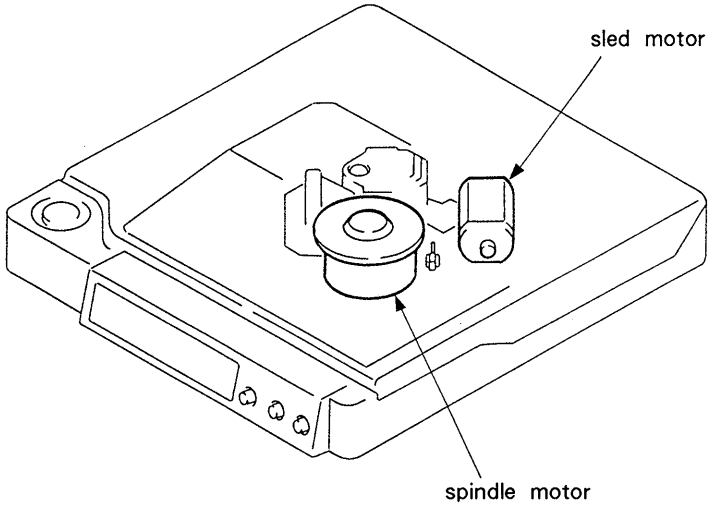

• Semiconductor Lead Layouts

GP1F31T

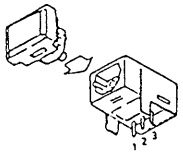

SEL2913K-D

4-7. IC BLOCK DIAGRAM

IC101, 201
PCM-66PJ

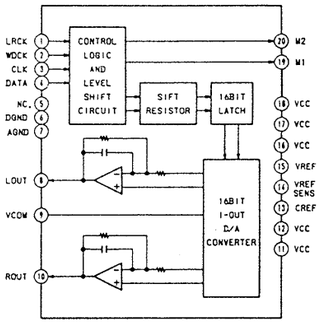

IC504
MPC1715

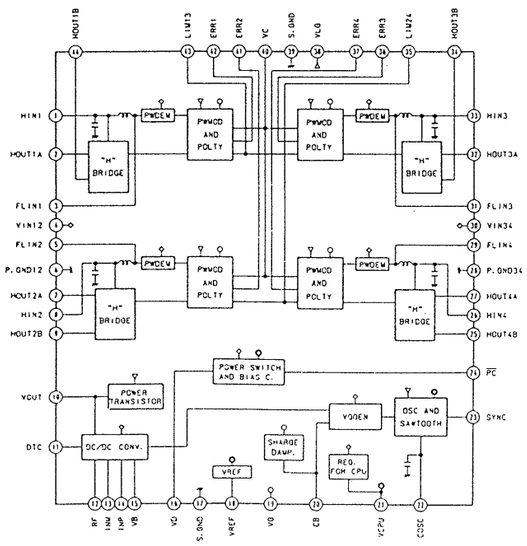

IC501
CXA1271Q

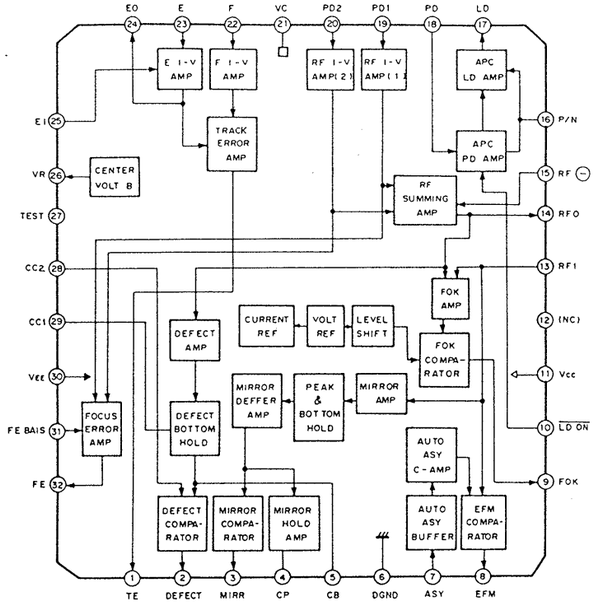

IC601
CXD1125Q

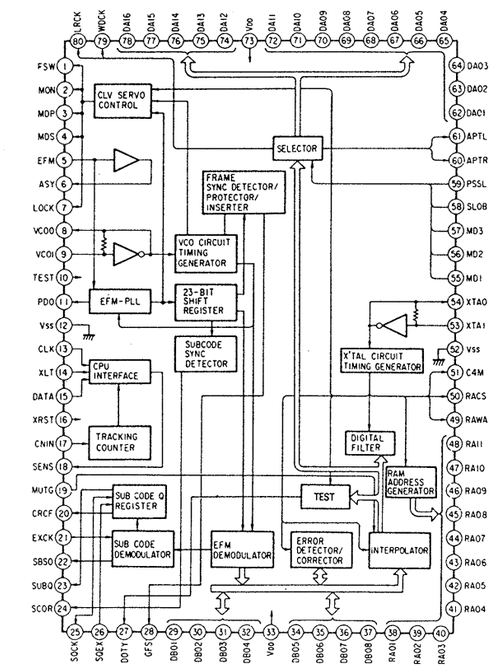

IC502
CXA1272R

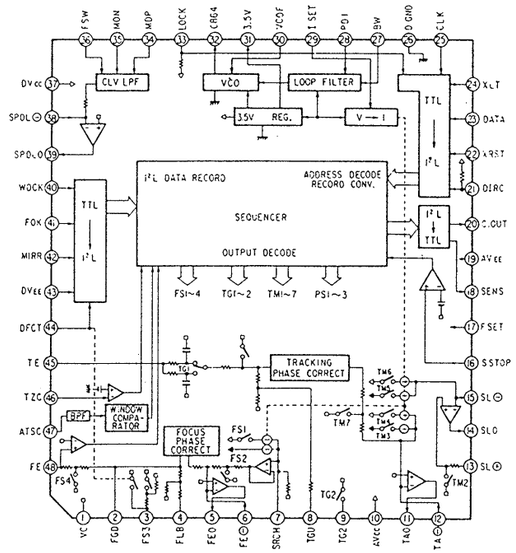

IC301
CXD1160AQ

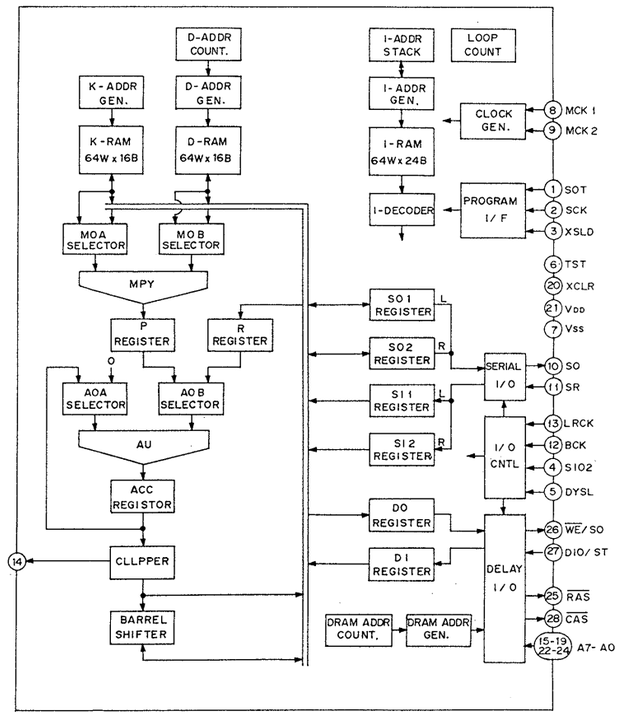

SECTION 5
EXPLODED VIEWS

NOTE:

- The mechanical parts with no reference number in the exploded views are not supplied.
- The construction parts of an assembled part are indicated with a collation number in the remark column.
- Items marked "★" are not stocked since they are seldom required for routine service. Some delay should be anticipated when ordering these items.
- Due to standardization, parts with part number suffix -XX and -X may be different from the parts specified in the components used on the set.
- Color Indication of Appearance Parts Example:
  (RED) . . . KNOB, BALANCE (WHITE)
  ↑ Cabinet's Color ↑ Parts' Color

The components identified by mark ⚠ or dotted line with mark ⚠ are critical for safety.
Replace only with part number specified.

Les composants identifiés par une marque ⚠ sont critiques pour la sécurité.
Ne les remplacer que par une pièce portant le numéro spécifé.

5-1. CABINET SECTION

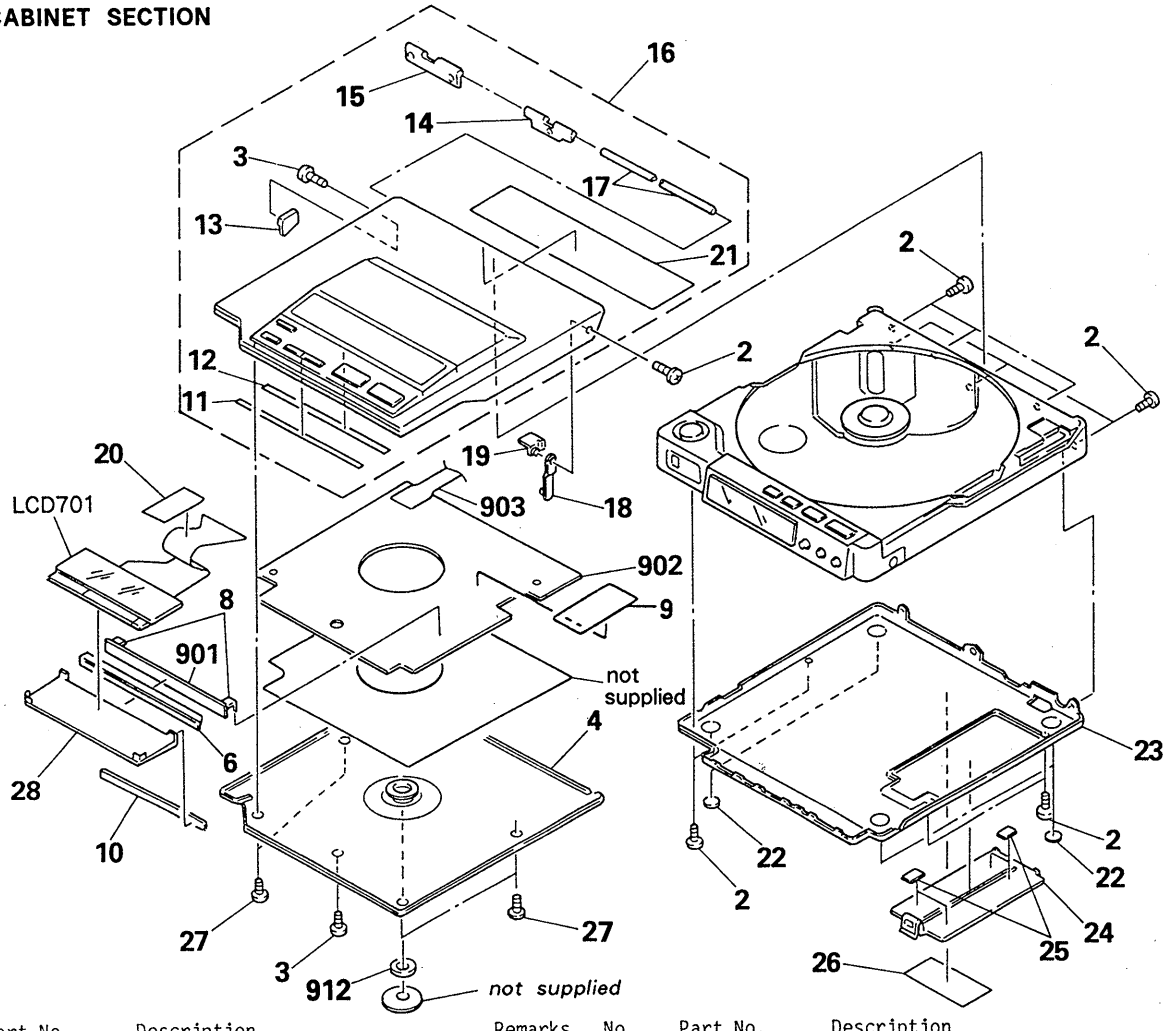

No.	Part No.	Description	Remarks
2	3-703-816-72	SCREW (M1.4X3.0), SPECIAL HEAD	
3	3-895-823-41	SCREW (B1.4X4), TAPPING	
4	A-3043-251-A	COVER (LID) ASSY	
6	*4-926-163-01	HOLDER (T-LED)	
8	4-926-167-01	TERMINAL BOARD (LED)	
9	*4-932-718-01	SPACER (LCD FLEXIBLE)	
10	*4-932-707-01	SHEET (DIFFUSION T)	
11	4-926-172-01	SHEET (F), ADHESIVE	
12	4-932-794-01	SHEET (M), ADHESIVE	
13	4-920-272-01	RETAINER, SPRING, SWITCHING	
14	4-924-143-01	HINGE (RIGHT)	
15	4-924-142-01	HINGE (LEFT)	
16	A-3043-250-A	PLATE ASSY, TRANSPARENT	
17	4-924-144-01	SHAFT, FULCRUM	
18	X-4921-216-1	PLATE (B) ASSY, SWITCHING	
19	X-4917-704-1	BRACKET ASSY, SWITCHING PLATE	
20	*4-926-115-01	CUSHION (P)	
21	*4-932-714-01	SHEET (UPPER LID), INSULATING	
22	4-912-641-01	FOOT, RUBBER	
23	X-4921-243-1	PANEL ASSY, BOTTOM	
24	4-926-185-01	LID, BATTERY CASE	
25	3-831-441-XX	CUSHION	
26	*4-926-188-01	(US,Canadian).....LABEL, MODEL NUMBER	
	*4-932-712-01	(AEP,FRENCH,UK,E)...LABEL, MODEL NUMBER	
27	3-703-816-02	SCREW (M1.4X2.0), SPECIAL HEAD	
28	X-4921-249-1	PLATE (T) ASSY, LIGHT GUIDE	
901	*1-631-515-11	PC BOARD, LED-2	
902	*1-631-516-12	PC BOARD, KEY	
903	1-632-626-11	PC BOARD, KEY FLEXIBLE	
912	1-452-473-11	MAGNET	
LCD701	1-808-771-11	DISPLAY PANEL, LIQUID CRYSTAL	

5-2. CHASSIS SECTION (1)

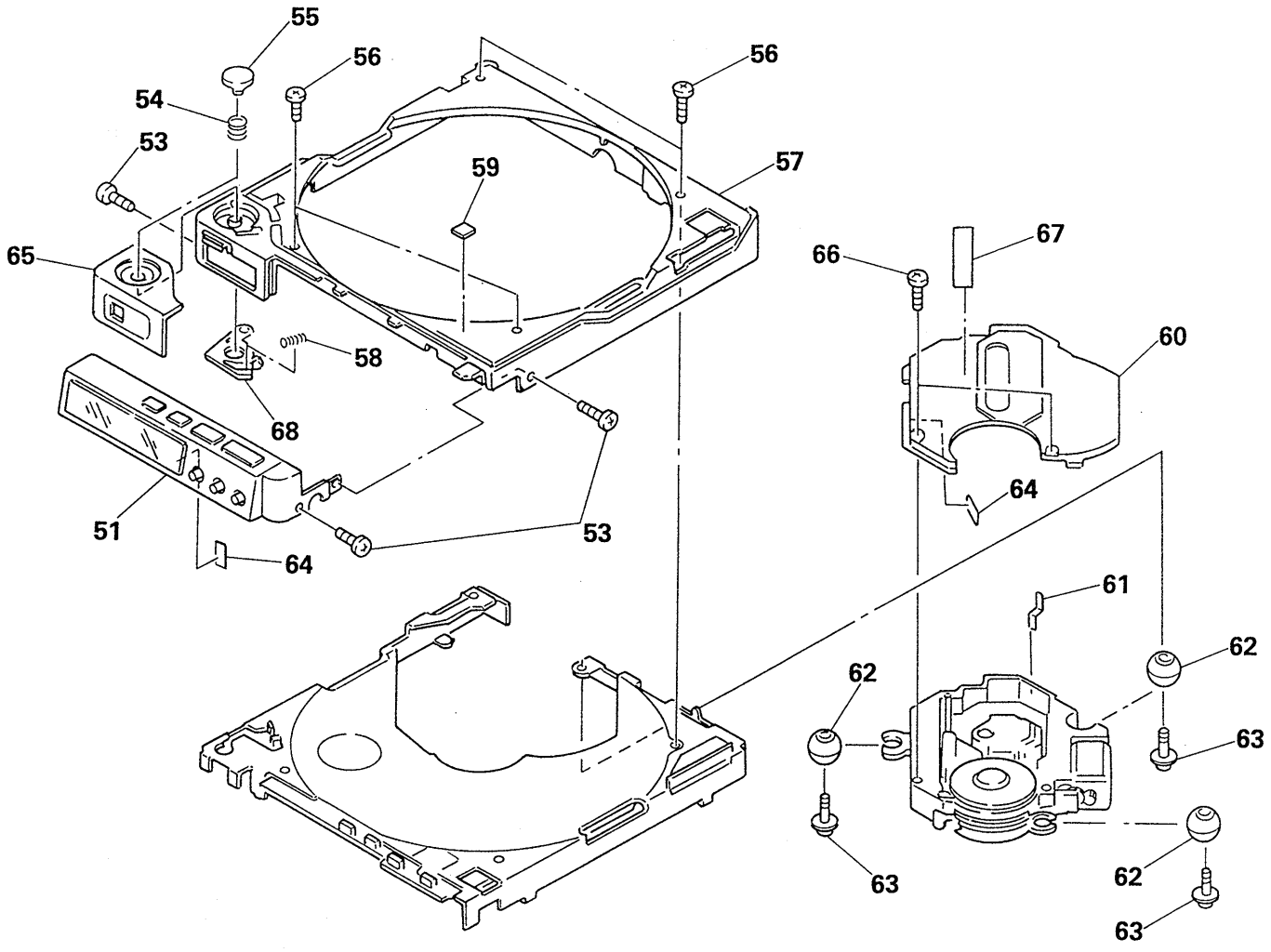

No.	Part No.	Description	Remarks
51	X-4921-245-1	PANEL (M) ASSY, FRONT	
53	3-703-816-72	SCREW (M1.4X3.0), SPECIAL HEAD	
54	4-917-727-01	SPRING, COMPRESSION	
55	4-924-130-31	BUTTON, OPEN	
56	3-703-816-22	SCREW (M1.4X5.0), SPECIAL HEAD	
57	4-926-177-01	CABINET	
58	4-924-140-01	SPRING, COMPRESSION	
59	*4-932-708-11	CUSHION (UPPER LID)	
60	4-926-141-01	COVER, MD	
61	3-831-441-XX	CUSHION	
62	X-4917-723-1	DAMPER	
63	4-920-209-01	SCREW (INSULATOR), STEP	
64	9-911-838-XX	CUSHION	
65	4-926-165-01	PANEL (AL), FRONT	
66	3-895-823-11	SCREW (B1.4X3), TAPPING	
67	4-908-711-01	LABEL, CAUTION, LENS	
68	4-926-161-01	LEVER, LOCK	

5-3. CHASSIS SECTION (2)

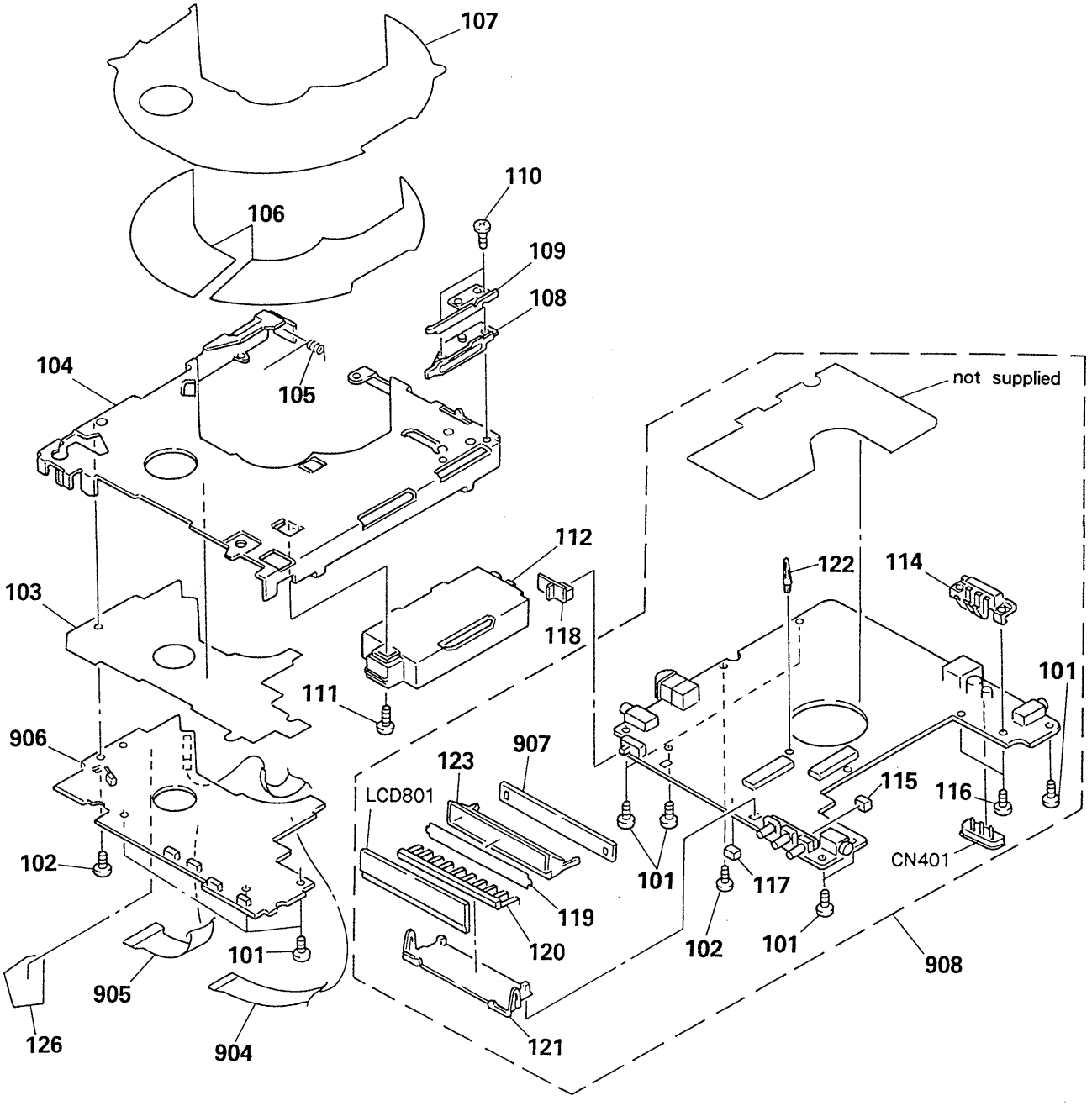

No.	Part No.	Description	Remarks
101	3-703-816-41	SCREW (M1.4X2.5), SPECIAL HEAD	
102	3-335-797-21	SCREW (M1.4X3), TOOTHED LOCK	
103	4-926-169-01	SHEET (S), INSULATING	
104	*X-4921-246-1	CHASSIS SUB ASSY	
105	4-930-113-01	SPRING (SWITCHING), TORSION	
106	4-926-175-01	SHEET, ADHESIVE, CHASSIS COVER	
107	4-924-138-11	COVER, CHASSIS	
108	4-932-711-01	PLATE, SLIDE, SWITCHING PLATE	
109	*4-917-753-01	SPRING	
110	3-703-816-02	SCREW (M1.4X2.0), SPECIAL HEAD	
111	3-703-816-72	SCREW (M1.4X3.0), SPECIAL HEAD	
112	4-926-181-01	CASE, BATTERY	
114	4-930-131-01	TERMINAL, BATTERY	
115	9-911-840-XX	RUBBER (B)	
116	7-627-853-67	PRECISION SCREW +P 2X6 TYPE 3	

No.	Part No.	Description	Remarks
117	9-911-841-XX	CUSHION (B)	
118	4-926-166-01	KNOB (HOLD)	
119	4-926-191-01	SHEET (DIFFUSION)	
120	*4-932-721-01	SPACER (LCD TERMINAL)	
121	*4-926-186-01	HOLDER (F-LCD)	
122	*4-926-168-01	SPACER (PC)	
123	*4-926-180-01	PLATE (F), LIGHT GUIDE	
126	*4-932-720-01	PAPER, SHIELD, FLEXIBLE	
904	1-631-518-11	PC BOARD, FLEXIBLE	
905	1-631-517-11	PC BOARD, FLEXIBLE	
906	A-3015-778-A	PC BOARD ASSY, SERVO	
907	*1-631-514-11	PC BOARD, LED-1	
908	A-3015-777-A	PC BOARD ASSY, MAIN	
CN401	1-535-608-21	TERMINAL, BATTERY	
LCD801	1-808-770-11	DISPLAY PANEL, LIQUID CRYSTAL	

5-4. MECHANISM SECTION (CDM—555)

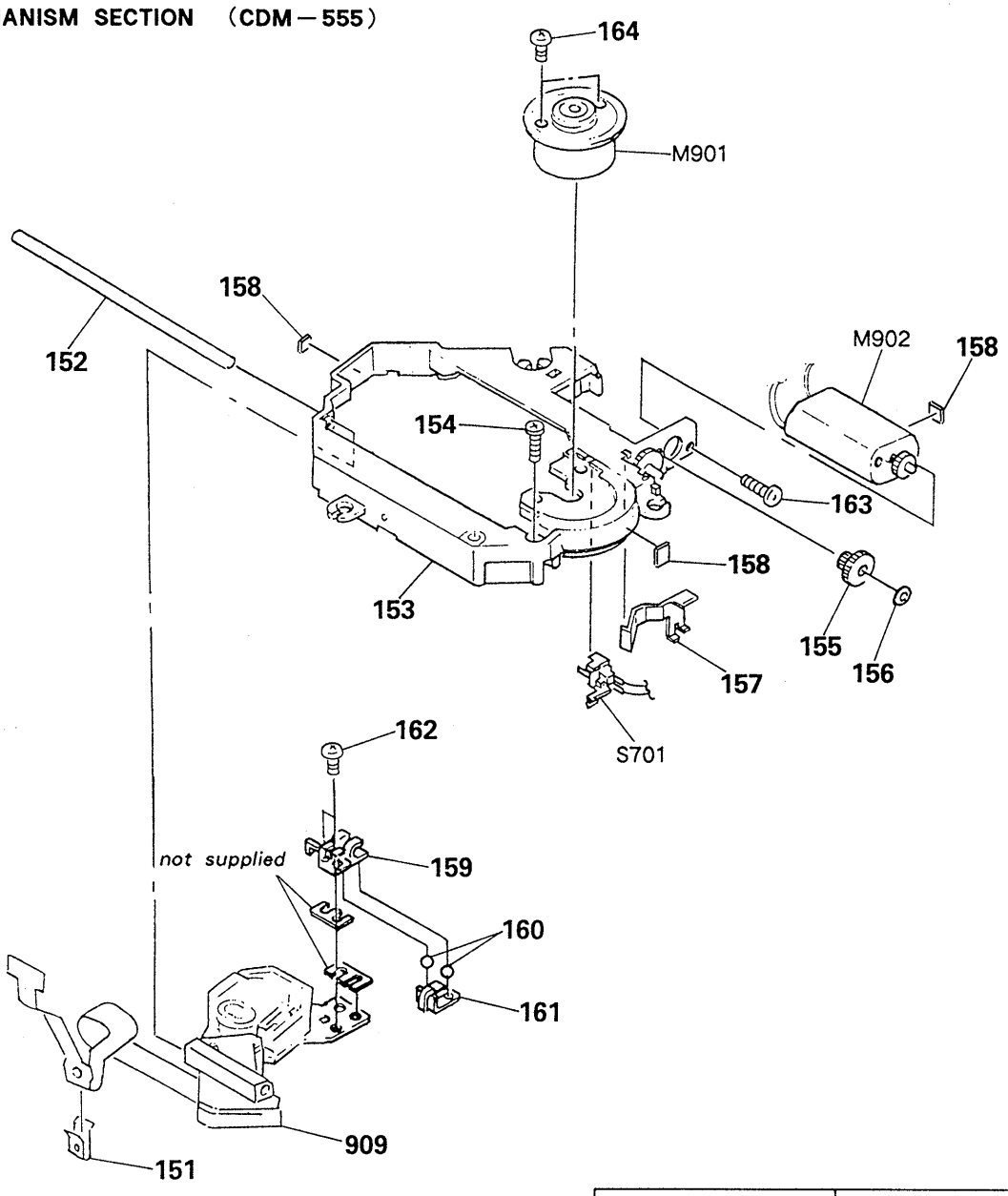

Note:	Note:
The components identified by mark ⚠ or dotted line with mark ⚠ are critical for safety. Replace only with part number specified.	Les composants identifiés par une marque ⚠ sont critiques pour la sécurité. Ne les remplacer que par une pièce portant le numéro spécifié.

No.	Part No.	Description	Remarks
151	4-917-622-01	RETAINER, FLEXIBLE	
152	4-917-611-01	SHAFT (A)	
153	X-4930-108-1	CHASSIS ASSY, MD	
154	4-921-299-01	SCREW (1.7X8), SPECIAL	
155	4-921-292-01	GEAR (B)	
156	3-315-384-11	WASHER, STOPPER	
157	4-921-290-01	SPRING	
158	*3-880-474-11	CUSHION, 15X5X0.3	
159	4-921-294-01	RACK (A)	
160	7-671-111-11	STEEL, BOUL 1.5MM	
161	4-921-296-01	SPRING	
162	7-627-552-38	SCREW, PRECISION +P 1.7X3	
163	7-627-553-38	SCREW, PRECISION +P 2X3	
164	7-627-552-08	SCREW, PRECISION +P 1.7X2.5	
909	⚠8-848-141-11	DEVICE, OPTICAL KSS-167B (RP)	
M901	A-3133-384-A	MOTOR ASSY, CLV	
M902	A-3133-334-A	MOTOR SUB ASSY, FEED	
S701	1-571-099-11	SWITCH (LIMIT)	

SECTION 6
ELECTRICAL PARTS LIST

NOTE:

- Due to standardization, replacements in the parts list may be different from the parts specified in the diagrams or the components used on the set.
- Items marked "★" are not stocked since they are seldom required for routine service. Some delay should be anticipated when ordering these items.
- If there are two or more same circuits in a set such as a stereophonic machine, only typical circuit parts may be indicated and capacitors and resistors in other same circuits may be omitted.

CAPACITORS:
MF: μF, PF: μμF.

RESISTORS
- All resistors are in ohms.
- F: nonflammable

COILS
- MMH: mH, UH: μH

SEMICONDUCTORS
In each case, U: μ, for example:
UA...: μA..., UPA...: μPA...,
UPC...: μPC, UPD...: μPD...

The components identified by mark ⚠ or dotted line with mark ⚠ are critical for safety.
Replace only with part number specified.

Les composants identifiés par une marque ⚠ sont critiques pour la sécurité.
Ne les remplacer que par une pièce portant le numéro spécifié.

Ref.No.	Part No.	Description		
901	*1-631-515-11	PC BOARD, LED-2		
902	*1-631-516-12	PC BOARD, KEY		
903	1-632-626-11	PC BOARD, KEY FLEXIBLE		
904	1-631-518-11	PC BOARD, FLEXIBLE		
905	1-631-517-11	PC BOARD, FLEXIBLE		
906	A-3015-778-A	PC BOARD ASSY, SERVO		
907	*1-631-514-11	PC BOARD, LED-1		
908	A-3015-777-A	PC BOARD ASSY, MAIN		
909	⚠8-848-141-11	DEVICE, OPTICAL KSS-167B (RP)		
912	1-452-473-11	MAGNET		
C101	1-135-144-11	TANTAL. CHIP 22MF	20%	6.3V
C102	1-135-144-11	TANTAL. CHIP 22MF	20%	6.3V
C103	1-135-162-21	TANTAL. CHIP 33MF	20%	4V
C104	1-163-105-00	CERAMIC CHIP 33PF	5%	50V
C105	1-163-133-00	CERAMIC CHIP 470PF	5%	50V
C106	1-135-149-21	TANTAL. CHIP 2.2MF	20%	6.3V
C107	1-135-130-11	TANTAL. CHIP 4.7MF	20%	6.3V
C108	1-135-149-21	TANTAL. CHIP 2.2MF	20%	6.3V
C110	1-135-149-21	TANTAL. CHIP 2.2MF	20%	6.3V
C111	1-126-206-11	ELECT CHIP 100MF	20%	6.3V
C112	1-163-141-00	CERAMIC CHIP 0.001MF	5%	50V
C113	1-163-117-00	CERAMIC CHIP 100PF	5%	50V
C114	1-163-129-00	CERAMIC CHIP 330PF	5%	50V
C201	1-135-144-11	TANTAL. CHIP 22MF	20%	6.3V
C202	1-135-144-11	TANTAL. CHIP 22MF	20%	6.3V
C203	1-135-162-21	TANTAL. CHIP 33MF	20%	4V
C204	1-163-105-00	CERAMIC CHIP 33PF	5%	50V
C205	1-163-133-00	CERAMIC CHIP 470PF	5%	50V
C206	1-135-149-21	TANTAL. CHIP 2.2MF	20%	6.3V
C207	1-135-130-11	TANTAL. CHIP 4.7MF	20%	6.3V
C208	1-135-149-21	TANTAL. CHIP 2.2MF	20%	6.3V
C210	1-135-149-21	TANTAL. CHIP 2.2MF	20%	6.3V
C211	1-126-206-11	ELECT CHIP 100MF	20%	6.3V
C212	1-163-141-00	CERAMIC CHIP 0.001MF	5%	50V
C213	1-163-117-00	CERAMIC CHIP 100PF	5%	50V
C214	1-163-129-00	CERAMIC CHIP 330PF	5%	50V
C301	1-163-095-00	CERAMIC CHIP 12PF	5%	50V
C302	1-163-095-00	CERAMIC CHIP 12PF	5%	50V
C303	1-135-131-11	TANTAL. CHIP 22MF	20%	4V
C304	1-135-144-11	TANTAL. CHIP 22MF	20%	6.3V
C305	1-135-144-11	TANTAL. CHIP 22MF	20%	6.3V
C306	1-135-144-11	TANTAL. CHIP 22MF	20%	6.3V
C308	1-135-144-11	TANTAL. CHIP 22MF	20%	6.3V
C309	1-135-206-11	TANTAL. CHIP 47MF	20%	10V
C310	1-135-174-11	TANTAL. CHIP 10MF	20%	10V
C311	1-162-953-11	CERAMIC CHIP 100PF	5%	50V
C312	1-163-809-11	CERAMIC CHIP 0.047MF	10%	25V
C313	1-163-809-11	CERAMIC CHIP 0.047MF	10%	25V
C315	1-163-117-00	CERAMIC CHIP 100PF	5%	50V
C317	1-135-174-11	TANTAL. CHIP 10MF	20%	10V
C318	1-163-141-00	CERAMIC CHIP 0.001MF	5%	50V
C401	1-126-206-11	ELECT CHIP 100MF	20%	6.3V
C402	1-135-180-21	TANTAL. CHIP 3.3MF	20%	6.3V
C403	1-135-091-00	TANTAL. CHIP 1MF	20%	16V
C404	1-135-174-11	TANTAL. CHIP 10MF	20%	10V
C405	1-135-130-11	TANTAL. CHIP 4.7MF	20%	6.3V
C406	1-135-180-21	TANTAL. CHIP 3.3MF	20%	6.3V
C407	1-135-162-21	TANTAL. CHIP 33MF	20%	4V
C408	1-135-174-11	TANTAL. CHIP 10MF	20%	10V
C409	1-135-159-21	TANTAL. CHIP 10MF	20%	16V
C410	1-163-037-11	CERAMIC CHIP 0.022MF	10%	25V
C411	1-126-357-11	ELECT 150MF	20%	16V
C412	1-135-180-21	TANTAL. CHIP 3.3MF	20%	6.3V
C413	1-135-159-21	TANTAL. CHIP 10MF	20%	16V
C414	1-135-149-21	TANTAL. CHIP 2.2MF	20%	6.3V
C415	1-135-174-11	TANTAL. CHIP 10MF	20%	10V
C416	1-135-149-21	TANTAL. CHIP 2.2MF	20%	6.3V
C417	1-163-141-00	CERAMIC CHIP 0.001MF	5%	50V
C418	1-135-162-21	TANTAL. CHIP 33MF	20%	4V
C420	1-135-174-11	TANTAL. CHIP 10MF	20%	10V
C421	1-163-141-00	CERAMIC CHIP 0.001MF	5%	50V
C422	1-163-141-00	CERAMIC CHIP 0.001MF	5%	50V
C423	1-163-141-00	CERAMIC CHIP 0.001MF	5%	50V
C424	1-163-038-00	CERAMIC CHIP 0.1MF		25V
C425	1-163-038-00	CERAMIC CHIP 0.1MF		25V
C469	1-135-174-11	TANTAL. CHIP 10MF	20%	10V
C470	1-163-038-00	CERAMIC CHIP 0.1MF		25V
C471	1-135-181-21	TANTAL. CHIP 4.7MF	20%	6.3V
C501	1-164-156-11	CERAMIC CHIP 0.1MF		25V
C502	1-163-989-11	CERAMIC CHIP 0.033MF	10%	25V
C503	1-162-970-11	CERAMIC CHIP 0.01MF	10%	25V
C504	1-135-145-11	TANTAL. CHIP 0.47MF	20%	25V
C505	1-163-127-00	CERAMIC CHIP 270PF	5%	50V
C506	1-164-156-11	CERAMIC CHIP 0.1MF		25V
C507	1-135-162-21	TANTAL. CHIP 33MF	20%	4V
C508	1-164-156-11	CERAMIC CHIP 0.1MF		25V
C509	1-135-131-11	TANTAL. CHIP 22MF	20%	4V
C510	1-162-970-11	CERAMIC CHIP 0.01MF	10%	25V
C511	1-163-095-00	CERAMIC CHIP 12PF	5%	50V
C512	1-135-162-21	TANTAL. CHIP 33MF	20%	4V
C513	1-162-970-11	CERAMIC CHIP 0.01MF	10%	25V

Ref.No.	Part No.	Description		
C514	1-135-162-21	TANTAL. CHIP 33MF	20%	4V
C515	1-163-038-00	CERAMIC CHIP 0.1MF		25V
C516	1-135-162-21	TANTAL. CHIP 33MF	20%	4V
C517	1-163-038-00	CERAMIC CHIP 0.1MF		25V
C518	1-163-037-11	CERAMIC CHIP 0.022MF	10%	25V
C519	1-162-953-11	CERAMIC CHIP 100PF	5%	50V
C520	1-135-181-21	TANTAL. CHIP 4.7MF	20%	6.3V
C521	1-163-037-11	CERAMIC CHIP 0.022MF	10%	25V
C522	1-135-131-11	TANTAL. CHIP 22MF	20%	4V
C523	1-162-953-11	CERAMIC CHIP 100PF	5%	50V
C524	1-135-131-11	TANTAL. CHIP 22MF	20%	4V
C525	1-135-181-21	TANTAL. CHIP 4.7MF	20%	6.3V
C526	1-163-081-00	CERAMIC CHIP 0.22MF		25V
C527	1-162-957-11	CERAMIC CHIP 220PF	5%	50V
C528	1-135-162-21	TANTAL. CHIP 33MF	20%	4V
C529	1-164-234-11	CERAMIC CHIP 1MF		10V
C530	1-163-023-00	CERAMIC CHIP 0.015MF	10%	50V
C531	1-135-131-11	TANTAL. CHIP 22MF	20%	4V
C532	1-162-964-11	CERAMIC CHIP 0.001MF	10%	50V
C533	1-163-989-11	CERAMIC CHIP 0.033MF	10%	25V
C534	1-162-637-11	CERAMIC CHIP 0.47MF		16V
C535	1-163-135-00	CERAMIC CHIP 560PF	5%	50V
C536	1-163-038-00	CERAMIC CHIP 0.1MF		25V
C537	1-162-964-11	CERAMIC CHIP 0.001MF	10%	50V
C538	1-164-234-11	CERAMIC CHIP 1MF		10V
C540	1-162-953-11	CERAMIC CHIP 100PF	5%	50V
C541	1-163-038-00	CERAMIC CHIP 0.1MF		25V
C542	1-163-809-11	CERAMIC CHIP 0.047MF	10%	25V
C543	1-162-964-11	CERAMIC CHIP 0.001MF	10%	50V
C545	1-135-206-11	TANTAL. CHIP 47MF	20%	10V
C546	1-135-148-21	TANTAL. CHIP 1.5MF	10%	10V
C547	1-135-174-11	TANTAL. CHIP 10MF	20%	10V
C548	1-163-081-00	CERAMIC CHIP 0.22MF		25V
C549	1-163-986-00	CERAMIC CHIP 0.027MF	10%	25V
C550	1-164-234-11	CERAMIC CHIP 1MF		10V
C551	1-164-156-11	CERAMIC CHIP 0.1MF		25V
C552	1-164-156-11	CERAMIC CHIP 0.1MF		25V
C553	1-164-234-11	CERAMIC CHIP 1MF		10V
C554	1-164-234-11	CERAMIC CHIP 1MF		10V
C555	1-162-964-11	CERAMIC CHIP 0.001MF	10%	50V
C556	1-164-156-11	CERAMIC CHIP 0.1MF		25V
C557	1-135-174-11	TANTAL. CHIP 10MF	20%	10V
C558	1-135-091-00	TANTAL. CHIP 1MF	20%	16V
C559	1-163-010-11	CERAMIC CHIP 0.0012MF	10%	50V
C561	1-163-809-11	CERAMIC CHIP 0.047MF	10%	25V
C562	1-162-964-11	CERAMIC CHIP 0.001MF	10%	50V
C563	1-135-162-21	TANTAL. CHIP 33MF	20%	4V
C570	1-126-114-11	ELECT 470MF	20%	6.3V
C571	1-126-114-11	ELECT 470MF	20%	6.3V
C601	1-162-638-11	CERAMIC CHIP 1MF		16V
C602	1-162-995-11	CERAMIC CHIP 0.022MF		50V
C604	1-162-953-11	CERAMIC CHIP 100PF	5%	50V
C605	1-162-953-11	CERAMIC CHIP 100PF	5%	50V
C606	1-162-953-11	CERAMIC CHIP 100PF	5%	50V
C607	1-162-953-11	CERAMIC CHIP 100PF	5%	50V
C801	1-135-131-11	TANTAL. CHIP 22MF	20%	4V
C802	1-163-038-00	CERAMIC CHIP 0.1MF		25V
C803	1-135-149-21	TANTAL. CHIP 2.2MF	20%	6.3V
C804	1-135-149-21	TANTAL. CHIP 2.2MF	20%	6.3V
C805	1-162-951-11	CERAMIC CHIP 68PF	5%	50V
C806	1-162-951-11	CERAMIC CHIP 68PF	5%	50V
C807	1-163-141-00	CERAMIC CHIP 0.001MF	5%	50V
C808	1-162-638-11	CERAMIC CHIP 1MF		16V
C809	1-162-970-11	CERAMIC CHIP 0.01MF	10%	25V
C810	1-163-141-00	CERAMIC CHIP 0.001MF	5%	50V
C811	1-135-157-21	TANTAL. CHIP 10MF	20%	6.3V
C812	1-163-141-00	CERAMIC CHIP 0.001MF	5%	50V
C813	1-163-038-00	CERAMIC CHIP 0.1MF		25V
C814	1-135-150-21	TANTAL. CHIP 3.3MF	20%	6.3V
C815	1-162-637-11	CERAMIC CHIP 0.47MF		16V
C818	1-163-038-00	CERAMIC CHIP 0.1MF		25V
C851	1-163-113-00	CERAMIC CHIP 68PF	5%	50V
C852	1-163-113-00	CERAMIC CHIP 68PF	5%	50V
C853	1-135-131-11	TANTAL. CHIP 22MF	20%	4V
C854	1-164-232-11	CERAMIC CHIP 0.01MF	10%	50V
C855	1-164-232-11	CERAMIC CHIP 0.01MF	10%	50V
C856	1-164-232-11	CERAMIC CHIP 0.01MF	10%	50V
CN401	1-535-608-21	TERMINAL, BATTERY		
CN501	1-563-546-11	HOUSING, CONNECTOR 12P		
CN502	1-568-290-11	SOCKET, CONNECTOR 4P		
CN802	*1-566-533-11	CONNECTOR, FPC (ZIF) 17P		
CN804	*1-566-533-11	CONNECTOR, FPC (ZIF) 17P		
CN805	1-566-531-11	CONNECTOR, FPC (ZIF) 15P		
D301	8-719-106-70	DIODE RD12M2B1		
D302	8-719-106-70	DIODE RD12M2B1		
D303	8-719-106-70	DIODE RD12M2B1		
D304	8-719-106-70	DIODE RD12M2B1		
D305	8-719-951-22	DIODE IMN10T108		
D401	8-719-975-34	DIODE RB110C-T100		
D403	8-719-400-18	DIODE MA152WK		
D405	8-719-975-42	DIODE RB411D-T97		
D406	8-719-400-18	DIODE MA152WK		
D407	8-719-105-63	DIODE RD4.3MB1		
D409	8-719-975-34	DIODE RB110C-T100		
D410	8-719-800-76	DIODE 1SS226		
D411	8-719-400-18	DIODE MA152WK		
D412	8-719-400-18	DIODE MA152WK		
D413	8-719-975-34	DIODE RB110C-T100		
D414	8-719-938-72	DIODE SB01-05CP		
D415	8-719-400-18	DIODE MA152WK		
D450	8-719-105-91	DIODE RD5.6MB2		
D485	8-719-105-72	DIODE RD4.7MB1		
D501	8-719-975-46	DIODE RB471E		
D503	8-719-938-72	DIODE SB01-05CP		
D504	8-719-938-72	DIODE SB01-05CP		
D505	8-719-400-18	DIODE MA152WK		
D506	8-719-106-70	DIODE RD12M-B1		
D507	8-719-106-70	DIODE RD12M-B1		
D801	8-719-951-22	DIODE IMN10T108		
D803	8-719-400-18	DIODE MA152WK		
D804	8-719-400-18	DIODE MA152WK		
D805	8-719-975-46	DIODE RB471E		
D807	8-719-400-18	DIODE MA152WK		
D808	8-719-938-72	DIODE SB01-05CP		

Ref.No.	Part No.	Description
D809	8-719-400-18	DIODE MA152WK
D810	8-719-105-91	DIODE RD5.6MB2
D811	8-719-800-76	DIODE 1SS226
D813	8-719-400-18	DIODE MA152WK
D814	8-719-400-18	DIODE MA152WK
D822	8-719-106-70	DIODE RD12MB1
D823	8-719-106-70	DIODE RD12MB1
D824	8-719-106-70	DIODE RD12MB1
D825	8-719-400-18	DIODE MA152WK
D826	8-719-400-18	DIODE MA152WK
D901	8-719-302-88	DIODE SEL2913K-D
D902	8-719-302-88	DIODE SEL2913K-D
D903	8-719-302-88	DIODE SEL2913K-D
D904	8-719-302-88	DIODE SEL2913K-D
D905	8-719-302-88	DIODE SEL2913K-D
D906	8-719-302-88	DIODE SEL2913K-D
D907	8-719-302-88	DIODE SEL2913K-D
D908	8-719-302-88	DIODE SEL2913K-D
D909	8-719-302-88	DIODE SEL2913K-D
D910	8-719-302-88	DIODE SEL2913K-D
D911	8-719-302-88	DIODE SEL2913K-D
D951	8-719-302-88	DIODE SEL2913K-D
D952	8-719-302-88	DIODE SEL2913K-D
D954	8-719-302-88	DIODE SEL2913K-D
D955	8-719-302-88	DIODE SEL2913K-D
IC101	8-759-983-82	IC PCM66P-J
IC102	8-759-710-79	IC NJM2107F
IC103	8-759-710-79	IC NJM2107F
IC201	8-759-983-82	IC PCM66P-J
IC202	8-759-710-79	IC NJM2107F
IC203	8-759-710-79	IC NJM2107F
IC301	8-752-332-80	IC CXD1160AQ
IC302	8-752-334-07	IC CXD2551M
IC305	8-759-230-43	IC TC7S04F
IC306	8-752-039-94	IC CXA1263M-T3
IC401	8-759-230-43	IC TC7S04F
IC402	8-759-977-71	IC GP1F31T (OPTICAL DIGITAL OUT)
IC501	8-752-033-55	IC CXA1271Q
IC502	8-752-033-98	IC CXA1272R
IC503	8-759-710-79	IC NJM2107F
IC504	8-759-030-17	IC MPC1715FU
IC505	8-759-230-43	IC TC7S04F
IC601	8-752-332-38	IC CXD1125Q
IC602	8-752-328-67	IC CXK5816MA-15L
IC801	8-752-811-62	IC CXP5086-608Q
IC802	8-759-982-77	IC BA10339F
IC803	8-759-234-10	IC TC7S32F
IC851	8-759-420-54	IC MN18762-SND-3
IC852	8-759-205-06	IC MC74HC74AF
IC853	8-759-013-92	IC MC74HC164F
IC854	8-759-013-92	IC MC74HC164F
IC855	8-759-231-30	IC TC4S30F
IC856	8-759-234-10	IC TC7S32F
IC857	8-759-234-10	IC TC7S32F
IC858	8-759-234-10	IC TC7S32F
IC859	8-759-986-85	IC S-8052ALR-LF
J301	1-563-281-41	JACK (LINE OUT)
J302	1-563-281-51	JACK (PHONES)
J401	1-562-961-11	JACK (DC IN 9V)
J801	1-563-281-61	JACK (REMOTE)

Ref.No.	Part No.	Description
JR301	1-216-295-00	METAL GLAZE 0 5% 1/10W
JR302	1-216-864-11	METAL GLAZE 0 5% 1/16W
JR303	1-216-295-00	METAL GLAZE 0 5% 1/10W
JR801	1-216-296-00	METAL GLAZE 0 5% 1/8W
JR802	1-216-296-00	METAL GLAZE 0 5% 1/8W
JR803	1-216-864-11	METAL GLAZE 0 5% 1/16W
JR804	1-216-295-00	METAL GLAZE 0 5% 1/10W
L101	1-410-997-31	INDUCTOR CHIP 2.2UH
L102	1-410-997-31	INDUCTOR CHIP 2.2UH
L201	1-410-997-31	INDUCTOR CHIP 2.2UH
L202	1-410-997-31	INDUCTOR CHIP 2.2UH
L301	1-410-997-31	INDUCTOR CHIP 2.2UH
L402	1-412-039-51	INDUCTOR CHIP 100UH
L403	1-412-031-11	INDUCTOR CHIP 47UH
L404	1-412-029-11	INDUCTOR CHIP 10UH
L405	1-412-029-11	INDUCTOR CHIP 10UH
L501	1-412-029-11	INDUCTOR CHIP 10UH
L502	1-412-039-51	INDUCTOR CHIP 100UH
L503	1-412-032-11	INDUCTOR CHIP 100UH
L504	1-412-039-51	INDUCTOR CHIP 100UH
L505	1-412-039-51	INDUCTOR CHIP 100UH
L801	1-410-997-31	INDUCTOR CHIP 2.2UH
L802	1-410-997-31	INDUCTOR CHIP 2.2UH
L803	1-410-997-31	INDUCTOR CHIP 2.2UH
LCD701	1-808-771-11	DISPLAY PANEL, LIQUID CRYSTAL
LCD801	1-808-770-11	DISPLAY PANEL, LIQUID CRYSTAL
M901	A-3133-384-A	MOTOR ASSY, CLV
M902	A-3133-334-A	MOTOR SUB ASSY, FEED
Q101	8-729-921-81	TRANSISTOR 2SD1781K-QR-T97
Q102	8-729-921-81	TRANSISTOR 2SD1781K-QR-T97
Q103	8-729-921-81	TRANSISTOR 2SD1781K-QR-T97
Q201	8-729-921-81	TRANSISTOR 2SD1781K-QR-T97
Q202	8-729-921-81	TRANSISTOR 2SD1781K-QR-T97
Q203	8-729-921-81	TRANSISTOR 2SD1781K-QR-T97
Q301	8-729-921-81	TRANSISTOR 2SD1781K-QR-T97
Q303	8-729-921-81	TRANSISTOR 2SD1781K-QR-T97
Q401	8-729-904-87	TRANSISTOR 2SB1197K-R
Q402	8-729-901-78	TRANSISTOR 2SC2412K
Q403	8-729-901-00	TRANSISTOR DTC124EK
Q406	8-729-921-81	TRANSISTOR 2SD1781K-QR-T97
Q407	8-729-216-22	TRANSISTOR 2SA1162G
Q408	8-729-903-10	TRANSISTOR FMW1
Q409	8-729-921-84	TRANSISTOR 2SB1182F5-Q
Q410	8-729-901-03	TRANSISTOR DTC144WK
Q411	8-729-901-00	TRANSISTOR DTC124EK
Q412	8-729-207-55	TRANSISTOR RN1401
Q413	8-729-901-78	TRANSISTOR 2SC2412K
Q414	8-729-901-05	TRANSISTOR DTA124EK
Q415	8-729-901-03	TRANSISTOR DTC144WK
Q416	8-729-901-00	TRANSISTOR DTC124EK
Q417	8-729-921-84	TRANSISTOR 2SB1182F5-Q
Q418	8-729-903-10	TRANSISTOR FMW1
Q420	8-729-907-39	TRANSISTOR IMD2
Q421	8-729-901-05	TRANSISTOR DTA124EK
Q422	8-729-901-00	TRANSISTOR DTC124EK

Ref.No.	Part No.	Description
Q423	8-729-116-06	TRANSISTOR 2SK160-K6
Q424	8-729-901-00	TRANSISTOR DTC124EK
Q425	8-729-216-22	TRANSISTOR 2SA812
Q427	8-729-216-22	TRANSISTOR 2SA812
Q428	8-729-902-96	TRANSISTOR FMS1
Q429	8-729-903-10	TRANSISTOR FMW1
Q430	8-729-116-06	TRANSISTOR 2SK160-K6
Q431	8-729-807-33	TRANSISTOR 2SB1123-R
Q432	8-729-901-00	TRANSISTOR DTC124EK-T-97
Q433	8-729-807-33	TRANSISTOR 2SB1112-R
Q435	8-729-904-87	TRANSISTOR 2SB1197K-R
Q461	8-729-904-87	TRANSISTOR 2SB1197K-R
Q462	8-729-921-81	TRANSISTOR 2SD1781K-QR-T97
Q463	8-729-921-81	TRANSISTOR 2SD1781K-QR-T97
Q464	8-729-901-05	TRANSISTOR DTA124EK
Q465	8-729-901-00	TRANSISTOR DTC124EK
Q466	8-729-921-81	TRANSISTOR 2SD1781K-QR-T97
Q501	8-729-402-90	TRANSISTOR XN4609
Q502	8-729-904-87	TRANSISTOR 2SB1197K
Q503	8-729-920-78	TRANSISTOR 2SC2412K-R
Q504	8-729-920-78	TRANSISTOR 2SC2412K-R
Q505	8-729-805-43	TRANSISTOR 2SC3396
Q506	8-729-901-00	TRANSISTOR DTC124EK
Q801	8-729-901-00	TRANSISTOR DTC124EK
Q804	8-729-901-05	TRANSISTOR DTA124EK
Q805	8-729-921-81	TRANSISTOR 2SD1781K-QR-T97
Q806	8-729-901-05	TRANSISTOR DTA124EK
Q807	8-729-907-39	TRANSISTOR IMD2
Q808	8-729-901-06	TRANSISTOR DTA144EK
Q809	8-729-901-00	TRANSISTOR DTC124EK
R101	1-216-699-11	METAL CHIP 100K 0.50% 1/10W
R102	1-216-699-11	METAL CHIP 100K 0.50% 1/10W
R103	1-216-675-11	METAL CHIP 10K 0.50% 1/10W
R105	1-216-823-11	METAL GLAZE 1.5K 5% 1/16W
R106	1-216-053-00	METAL GLAZE 1.5K 5% 1/10W
R107	1-216-813-11	METAL GLAZE 220 5% 1/16W
R113	1-216-823-11	METAL GLAZE 1.5K 5% 1/16W
R114	1-216-797-11	METAL GLAZE 10 5% 1/16W
R115	1-216-833-11	METAL GLAZE 10K 5% 1/16W
R121	1-216-663-11	METAL CHIP 3.3K 0.50% 1/10W
R122	1-216-653-11	METAL CHIP 1.2K 0.50% 1/10W
R123	1-216-823-11	METAL GLAZE 1.5K 5% 1/16W
R201	1-216-699-11	METAL CHIP 100K 0.50% 1/10W
R202	1-216-699-11	METAL CHIP 100K 0.50% 1/10W
R203	1-216-675-11	METAL CHIP 10K 0.50% 1/10W
R205	1-216-823-11	METAL GLAZE 1.5K 5% 1/16W
R206	1-216-053-00	METAL GLAZE 1.5K 5% 1/10W
R207	1-216-813-11	METAL GLAZE 220 5% 1/16W
R213	1-216-823-11	METAL GLAZE 1.5K 5% 1/16W
R214	1-216-797-11	METAL GLAZE 10 5% 1/16W
R215	1-216-833-11	METAL GLAZE 10K 5% 1/16W
R221	1-216-663-11	METAL CHIP 3.3K 0.50% 1/10W
R222	1-216-653-11	METAL CHIP 1.2K 0.50% 1/10W
R223	1-216-823-11	METAL GLAZE 1.5K 5% 1/16W
R303	1-216-830-11	METAL GLAZE 5.6K 5% 1/16W
R304	1-216-021-00	METAL GLAZE 68 5% 1/10W
R307	1-216-821-11	METAL GLAZE 1K 5% 1/16W
R308	1-216-833-11	METAL GLAZE 10K 5% 1/16W
R309	1-216-833-11	METAL GLAZE 10K 5% 1/16W
R310	1-216-833-11	METAL GLAZE 10K 5% 1/16W
R311	1-216-841-11	METAL GLAZE 47K 5% 1/16W
R312	1-216-857-11	METAL GLAZE 1M 5% 1/16W
R313	1-216-671-11	METAL CHIP 6.8K 0.50% 1/10W
R401	1-216-832-11	METAL GLAZE 8.2K 5% 1/16W
R402	1-216-845-11	METAL GLAZE 100K 5% 1/16W
R403	1-216-841-11	METAL GLAZE 47K 5% 1/16W
R404	1-216-861-11	METAL GLAZE 2.2M 5% 1/16W
R405	1-216-106-00	METAL GLAZE 240K 5% 1/10W
R406	1-216-837-11	METAL GLAZE 22K 5% 1/16W
R407	1-216-073-00	METAL GLAZE 10K 5% 1/10W
R408	1-216-857-11	METAL GLAZE 1M 5% 1/16W
R409	1-216-821-11	METAL GLAZE 1K 5% 1/16W
R410	1-216-033-00	METAL GLAZE 220 5% 1/10W
R411	1-216-833-11	METAL GLAZE 10K 5% 1/16W
R412	1-216-092-00	METAL GLAZE 62K 5% 1/10W
R413	1-216-830-11	METAL GLAZE 5.6K 5% 1/16W
R414	1-216-837-11	METAL GLAZE 22K 5% 1/16W
R415	1-216-821-11	METAL GLAZE 1K 5% 1/16W
R416	1-216-021-00	METAL GLAZE 68 5% 1/10W
R417	1-216-657-11	METAL CHIP 1.8K 0.50% 1/10W
R418	1-216-664-11	METAL CHIP 3.6K 0.50% 1/10W
R419	1-216-663-11	METAL CHIP 3.3K 0.50% 1/10W
R420	1-216-697-11	METAL CHIP 82K 0.50% 1/10W
R421	1-216-041-00	METAL GLAZE 470 5% 1/10W
R422	1-216-037-00	METAL GLAZE 330 5% 1/10W
R423	1-216-833-11	METAL GLAZE 10K 5% 1/16W
R426	1-216-861-11	METAL GLAZE 2.2M 5% 1/16W
R427	1-217-806-11	METAL GLAZE 1 5% 1/8W
R428	1-217-806-11	METAL GLAZE 1 5% 1/8W
R429	1-216-834-11	METAL GLAZE 12K 5% 1/16W
R430	1-216-826-11	METAL GLAZE 2.7K 5% 1/16W
R435	1-216-821-11	METAL GLAZE 1K 5% 1/16W
R436	1-216-821-11	METAL GLAZE 1K 5% 1/16W
R437	1-216-837-11	METAL GLAZE 22K 5% 1/16W
R438	1-216-041-00	METAL GLAZE 470 5% 1/10W
R439	1-216-821-11	METAL GLAZE 1K 5% 1/16W
R440	1-216-837-11	METAL GLAZE 22K 5% 1/16W
R441	1-216-821-11	METAL GLAZE 1K 5% 1/16W
R442	1-216-017-00	METAL GLAZE 47 5% 1/10W
R443	1-216-041-00	METAL GLAZE 470 5% 1/10W
R444	1-216-675-11	METAL CHIP 10K 0.50% 1/10W
R469	1-216-833-11	METAL GLAZE 10K 5% 1/16W
R471	1-216-821-11	METAL GLAZE 1K 5% 1/16W
R472	1-216-821-11	METAL GLAZE 1K 5% 1/16W
R501	1-216-024-00	METAL GLAZE 91 5% 1/10W
R502	1-216-079-00	METAL GLAZE 18K 5% 1/10W
R503	1-216-834-11	METAL GLAZE 12K 5% 1/16W
R504	1-216-073-00	METAL GLAZE 10K 5% 1/10W
R505	1-216-105-00	METAL GLAZE 220K 5% 1/10W
R506	1-216-837-11	METAL GLAZE 22K 5% 1/16W
R507	1-216-835-11	METAL GLAZE 15K 5% 1/16W
R508	1-216-069-00	METAL GLAZE 6.8K 5% 1/10W
R509	1-216-833-11	METAL GLAZE 10K 5% 1/16W
R510	1-216-150-00	METAL GLAZE 10 5% 1/8W
R511	1-216-839-11	METAL GLAZE 33K 5% 1/16W

Ref.No.	Part No.	Description			
R512	1-216-837-11	METAL GLAZE	22K	5%	1/16W
R513	1-216-859-11	METAL GLAZE	1.5M	5%	1/16W
R514	1-216-851-11	METAL GLAZE	330K	5%	1/16W
R515	1-216-833-11	METAL GLAZE	10K	5%	1/16W
R516	1-216-843-11	METAL GLAZE	68K	5%	1/16W
R517	1-216-845-11	METAL GLAZE	100K	5%	1/16W
R518	1-216-106-00	METAL GLAZE	240K	5%	1/10W
R519	1-216-844-11	METAL GLAZE	82K	5%	1/16W
R520	1-216-844-11	METAL GLAZE	82K	5%	1/16W
R521	1-216-837-11	METAL GLAZE	22K	5%	1/16W
R522	1-216-845-11	METAL GLAZE	100K	5%	1/16W
R523	1-216-826-11	METAL GLAZE	2.7K	5%	1/16W
R524	1-216-118-00	METAL GLAZE	750K	5%	1/10W
R525	1-216-833-11	METAL GLAZE	10K	5%	1/16W
R526	1-216-841-11	METAL GLAZE	47K	5%	1/16W
R527	1-216-687-11	METAL CHIP	33K	0.50%	1/10W
R528	1-216-103-00	METAL GLAZE	180K	5%	1/10W
R529	1-216-062-00	METAL GLAZE	3.6K	5%	1/10W
R530	1-216-826-11	METAL GLAZE	2.7K	5%	1/16W
R531	1-216-121-00	METAL GLAZE	1M	5%	1/10W
R532	1-216-687-11	METAL CHIP	33K	0.50%	1/10W
R533	1-216-833-11	METAL GLAZE	10K	5%	1/16W
R534	1-216-826-11	METAL GLAZE	2.7K	5%	1/16W
R535	1-216-821-11	METAL GLAZE	1K	5%	1/16W
R536	1-216-846-11	METAL GLAZE	120K	5%	1/16W
R537	1-216-846-11	METAL GLAZE	120K	5%	1/16W
R538	1-216-841-11	METAL GLAZE	47K	5%	1/16W
R539	1-216-857-11	METAL GLAZE	1M	5%	1/16W
R540	1-216-073-00	METAL GLAZE	10K	5%	1/10W
R542	1-216-847-11	METAL GLAZE	150K	5%	1/16W
R543	1-216-847-11	METAL GLAZE	150K	5%	1/16W
R544	1-216-825-11	METAL GLAZE	2.2K	5%	1/16W
R545	1-216-838-11	METAL GLAZE	27K	5%	1/16W
R546	1-216-840-11	METAL GLAZE	39K	5%	1/16W
R548	1-216-829-11	METAL GLAZE	4.7K	5%	1/16W
R549	1-216-857-11	METAL GLAZE	1M	5%	1/16W
R550	1-216-825-11	METAL GLAZE	2.2K	5%	1/16W
R551	1-216-825-11	METAL GLAZE	2.2K	5%	1/16W
R552	1-216-827-11	METAL GLAZE	3.3K	5%	1/16W
R553	1-216-825-11	METAL GLAZE	2.2K	5%	1/16W
R554	1-216-049-00	METAL GLAZE	1K	5%	1/10W
R555	1-216-861-11	METAL GLAZE	2.2M	5%	1/16W
R556	1-216-109-00	METAL GLAZE	330K	5%	1/10W
R557	1-216-857-11	METAL GLAZE	1M	5%	1/16W
R601	1-216-841-11	METAL GLAZE	47K	5%	1/16W
R602	1-216-845-11	METAL GLAZE	100K	5%	1/16W
R603	1-216-841-11	METAL GLAZE	47K	5%	1/16W
R801	1-216-833-11	METAL GLAZE	10K	5%	1/16W
R802	1-216-837-11	METAL GLAZE	22K	5%	1/16W
R803	1-216-837-11	METAL GLAZE	22K	5%	1/16W
R804	1-216-837-11	METAL GLAZE	22K	5%	1/16W
R805	1-216-833-11	METAL GLAZE	10K	5%	1/16W
R806	1-216-841-11	METAL GLAZE	47K	5%	1/16W
R807	1-216-851-11	METAL GLAZE	330K	5%	1/16W
R808	1-216-041-00	METAL GLAZE	470	5%	1/10W
R809	1-216-025-00	METAL GLAZE	100K	5%	1/10W
R810	1-216-827-11	METAL GLAZE	3.3K	5%	1/16W
R811	1-216-097-00	METAL GLAZE	100K	5%	1/10W

Ref.No.	Part No.	Description			
R812	1-216-824-11	METAL GLAZE	1.8K	5%	1/16W
R813	1-216-821-11	METAL GLAZE	1K	5%	1/16W
R814	1-216-298-00	METAL GLAZE	2.2	5%	1/10W
R815	1-216-045-00	METAL GLAZE	680	5%	1/10W
R816	1-218-163-11	METAL GLAZE	120K	1%	1/10W
R817	1-216-694-11	METAL CHIP	62K	0.50%	1/10W
R818	1-216-665-11	METAL CHIP	3.9K	0.50%	1/10W
R819	1-216-654-11	METAL CHIP	1.3K	0.50%	1/10W
R820	1-216-653-11	METAL CHIP	1.2K	0.50%	1/10W
R821	1-216-688-00	METAL GLAZE	36K	0.50%	1/10W
R823	1-216-857-11	METAL GLAZE	1M	5%	1/16W
R824	1-216-837-11	METAL GLAZE	22K	5%	1/16W
R826	1-216-833-11	METAL GLAZE	10K	5%	1/16W
R831	1-216-845-11	METAL GLAZE	100K	5%	1/16W
R832	1-216-849-11	METAL GLAZE	220K	5%	1/16W
R833	1-216-833-11	METAL GLAZE	10K	5%	1/16W
R839	1-216-837-11	METAL GLAZE	22K	5%	1/16W
R851	1-216-081-00	METAL GLAZE	22K	5%	1/10W
R852	1-216-081-00	METAL GLAZE	22K	5%	1/10W
R853	1-216-073-00	METAL GLAZE	10K	5%	1/10W
R854	1-216-081-00	METAL GLAZE	22K	5%	1/10W
R855	1-216-678-11	METAL CHIP	13K	0.50%	1/10W
R856	1-216-651-11	METAL CHIP	1K	0.50%	1/10W
R857	1-216-658-11	METAL CHIP	2K	0.50%	1/10W
R858	1-216-667-11	METAL CHIP	4.7K	0.50%	1/10W
R859	1-216-675-11	METAL CHIP	10K	0.50%	1/10W
R860	1-216-682-11	METAL CHIP	20K	0.50%	1/10W
R901	1-216-021-00	METAL GLAZE	68	5%	1/10W
R902	1-216-021-00	METAL GLAZE	68	5%	1/10W
R903	1-216-021-00	METAL GLAZE	68	5%	1/10W
R904	1-216-033-00	METAL GLAZE	220	5%	1/10W
R951	1-216-033-00	METAL GLAZE	220	5%	1/10W
R952	1-216-033-00	METAL GLAZE	220	5%	1/10W
RV401	1-237-325-11	RES, ADJ, METAL GLAZE 4.7K			
RV402	1-237-328-11	RES, ADJ, METAL GLAZE 47K			
RV501	1-230-869-11	RES, ADJ, METAL GLAZE 4.7K			
RV502	1-230-871-11	RES, ADJ, METAL GLAZE 22K			
RV503	1-230-873-11	RES, ADJ, METAL GLAZE 47K			
RV504	1-237-575-11	RES, ADJ, METAL GLAZE 1.0K			
RV505	1-230-873-11	RES, ADJ, METAL GLAZE 47K			
RV801	1-237-143-11	RES, ADJ, METAL GLAZE 10K			
S701	1-571-099-11	SWITCH (LIMIT)			
S801	1-571-484-11	SWITCH, KEY BOARD(ENTER REMAIN PLAY KEY)			
S802	1-570-204-11	SWITCH, KEY BOARD (▶II)			
S803	1-570-204-11	SWITCH, KEY BOARD (■)			
S804	1-570-204-11	SWITCH, KEY BOARD (⏭)			
S805	1-570-204-11	SWITCH, KEY BOARD (⏮)			
S808	1-572-003-11	SWITCH, SLIDE (HOLD —)			
S901	1-554-911-11	SWITCH, LEAF (DOOR)			
S902	1-571-737-21	SWITCH, KEY BBOARD (REFLOW)(EQ)			
S903	1-571-737-21	SWITCH, KEY BBOARD (REFLOW)(+)			
S904	1-571-737-21	SWITCH, KEY BBOARD (REFLOW)(-)			
S905	1-571-737-21	SWITCH, KEY BBOARD (REFLOW)(+)			
S906	1-571-737-21	SWITCH, KEY BBOARD (REFLOW)(-)			
S907	1-571-737-21	SWITCH, KEY BBOARD (REFLOW)(MODE)			
X301	1-567-737-11	VIBRATOR, CRYSTAL			
X801	1-577-064-11	VIBRATOR, CHIP CERAMIC			
X851	1-567-196-11	OSCILLATOR, CERAMIC			

ACCESSORY & PACKING MATERIAL

1-463-691-11	(US,Canadian)..	ADAPTOR, AC (AC-930A)
1-463-700-11	(UK).....	ADAPTOR, AC (AC-930A)
1-463-702-11	(E).....	ADAPTOR, AC (AC-950W)
1-463-705-11	(AEP,FRENCH)...	ADAPTOR, AC (AC-930AEP)
1-463-968-11	(US).....	ADAPTOR, AC (AC-940)
1-526-565-00	(E).....	AC PLUG ADAPTOR
1-528-297-11	(US,Canadian,UK,E)..	BATTERY PACK (BP-2EX)
1-528-297-21	(AEP,FRENCH).....	BATTERY PACK (BP-2EX)
1-555-658-21		CORD, CONNECTION
1-575-145-11		CORD, CONNECTION
3-750-539-11	(Canadian,AEP,FRENCH,UK,E)...	MANUAL, INSTRUCTION (ENGLISH,FRENCH,SPANISH,PORTUGUESE)
3-750-539-21	(US).....	MANUAL, INSTRUCTION (ENGLISH)
3-750-539-41	(AEP).....	MANUAL, INSTRUCTION (GERMAN,ITALIAN,DUTCH,SWEDISH)
4-920-407-01	(US,Canadian,E)...	BAG, PROTECTION
4-926-173-01		CASE, CARRYING
*4-926-192-01		CUSHION (UPPER)
4-926-193-01	(US,Canadian,E)...	CUSHION (LOWER)
*4-932-701-01	(AEP,FRENCH,UK)...	CUSHION (LOWER)
*4-926-194-01	(US,Canadian)...	INDIVIDUAL CARTON
*4-926-199-01	(E).....	INDIVIDUAL CARTON
*4-932-702-01	(AEP).....	INDIVIDUAL CARTON
*4-932-704-01	(FRENCH,UK).....	INDIVIDUAL CARTON

9-953-807-12
(including 9-953-807-91, 92, 93)

Sony Corporation
General Audio Group

English
90H1606-1
Printed in Japan

Published by Customer Relations and Service Group