D-802K

SERVICE MANUAL

US Model
Canadian Model
AEP Model
E Model
Australian Model

Model Name Using Similar Mechanism	D-2/20/T24
CD Mechanism Name	KSM-220AAN

SPECIFICATIONS

CD section

System	Compact disc digital audio system
Laser diode properties	Material: GaAlAs Wavelength: $\lambda = 780$ nm Emission duration: Continuous Laser output: Less than 44.6 μW (This output is the value measured at a distance of 200 mm from the objective lens surface on the Optical Pick-up Block.)
Frequency response	20 – 20,000 Hz $\pm^{0.5}_{2.5}$ dB (measured by EIAJ CP-307)
Output (at 9 V input level)	Line output (stereo minijack) Output level 1 V rms at 47 kilohms Load impedance over 10 kilohms Headphones (stereo minijack) 9 mW + 9 mW at 16Ω

General

Power requirements	Supplied: • DC IN 9 V jack accepts: the Sony AC power adaptor for use on 120 V AC, 60 Hz in USA, 240 V AC, 50 Hz in United Kingdom/Australia the car battery cord for use with 12 V car battery Optional: • DC IN 9 V accepts the Sony CPM-203P mount plate and CPM-200A plate arm for use on 12 V car battery • DC 6 V four size AA (LR6) alkaline batteries
Power consumption	3.15 W DC
Dimensions	Approx. 140 × 42.2 × 162 mm ($5^5/_8 \times 1^{11}/_{16} \times 6^1/_2$ in.) (w/h/d) incl. projecting parts and controls
Weight	Approx. 500 g (17.8 oz.) net Approx. 600 g (21.2 oz.) incl. battery.

— Continued on page 2 —

CAUTION
Use of controls or adjustments or performance of pro-cedures other than those specified herein may result in hazardous radiation exposure.

For the Customers in the United Kingdom

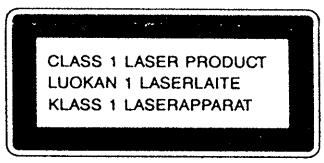

This Compact Disc player is classified as a CLASS 1 LASER product.
The CLASS 1 LASER PRODUCT label is located on the bottom exterior.

COMPACT DISC COMPACT PLAYER

SONY®

Supplied accessories
AC power adaptor (1)
Car battery cord (1)
Car connecting pack (1)
Connecting cord (1)
Fuse (1)
Velcro tape (2)
Plug head (1)

Design and specifications subject to change without notice.

Note

This appliance conforms with EEC Directives 87/308/EEC regarding interference suppression.

Optional accessories

Headphones MDR-E557
Wireless remote commander RM-DM5K
Wired remote commander RM-DM2
Plate arm CPM-200A
Mount plate CPM-203P
Car mount arm (plate arm and mount plate) CPM-203PK

Your dealer may not handle some of the optional accessories listed above. Please ask the dealer for detailed information.

TABLE OF CONTENTS

SAFETY-RELATED COMPONENT WARNING!!

COMPONENTS IDENTIFIED BY MARK ⚠ OR DOTTED LINE WITH MARK ⚠ ON THE SCHEMATIC DIAGRAMS AND IN THE PARTS LIST ARE CRITICAL TO SAFE OPERATION. REPLACE THESE COMPONENTS WITH SONY PARTS WHOSE PART NUMBERS APPEAR AS SHOWN IN THIS MANUAL OR IN SUPPLEMENTS PUBLISHED BY SONY.

ATTENTION AU COMPOSANT AYANT RAPPORT À LA SÉCURITÉ!

LES COMPOSANTS IDENTIFIÉS PAR UNE MARQUE ⚠ SUR LES DIAGRAMMES SCHÉMATIQUES ET LA LISTE DES PIÈCES SONT CRITIQUES POUR LA SÉCURITÉ DE FONCTIONNEMENT. NE REMPLACER CES COMPOSANTS QUE PAR DES PIÈCES SONY DONT LES NUMÉROS SONT DONNÉS DANS CE MANUEL OU DANS LES SUPPLÉMENTS PUBLIÉS PAR SONY.

SECTION 1
GENERAL

This section is extracted from instruction manual.

Location and Function of Controls

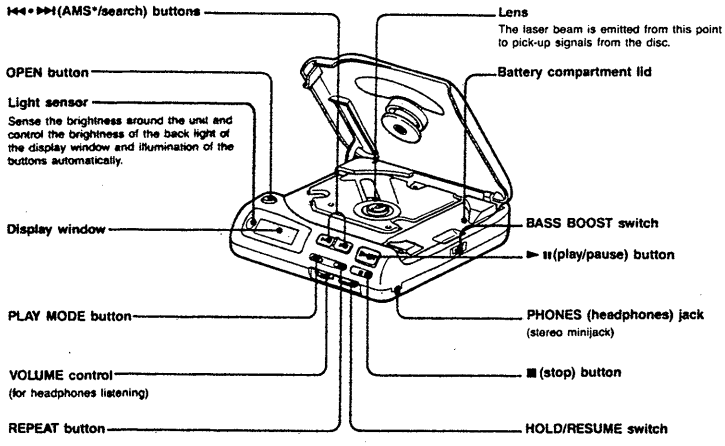

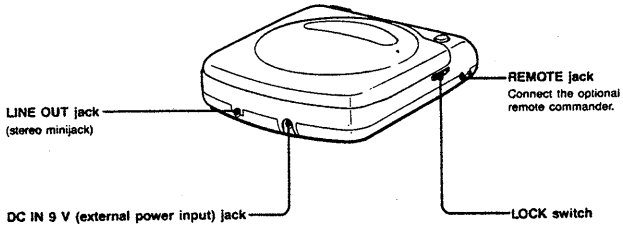

*AMS is an abbreviation for Automatic Music Sensor.

Power Sources

When Using Batteries

Install four size AA (LR6) alkaline batteries.
Approximately 8 hours of continuous play is possible.

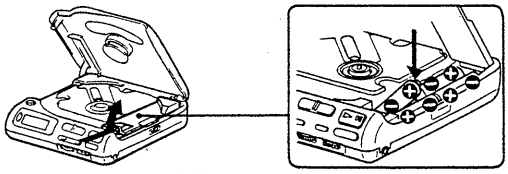

Close the battery compartment lid firmly.

If the battery compartment lid is removed
Replace it pushing both sides in the numbered order as shown.

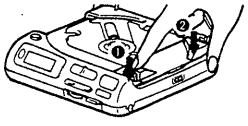

Note
The BATT indication appears in the display window during play or pause, and blink when the power of the batteries becomes weak. If the batteries are weak, the indication may be interrupted temporarily when you press the►II or ■ button, or when the unit is subjected to a shock.

Notes on batteries
- Insert the batteries with correct polarity.
- Do not use old batteries with new ones or different types of batteries together.
- You cannot charge the battery.
- If the electrolyte inside the battery should come into contact, wash the contaminated parts in the battery box with a cloth and replace the old batteries with new ones.
- When the unit is not to be used for a long period of time, remove them.

Using on House Current

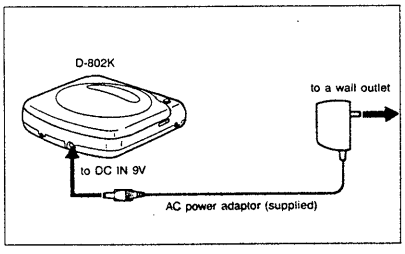

Note on the AC power adaptor
Use only the supplied AC power adaptor or AC-E6M/AC-E90M AC power adaptor (not supplied). Do not use any other AC power adaptor.

Polarity of the plug
(Unified polarity type)

The AC power adaptor supplied with other DISCMAN models with DC IN 9 V or DC IN 6 V jack and AC-D6M, etc. cannot be used with this unit.

Disc Playing

When you use batteries as a power source, the disc compartment, display window and the operation buttons are not illuminated.

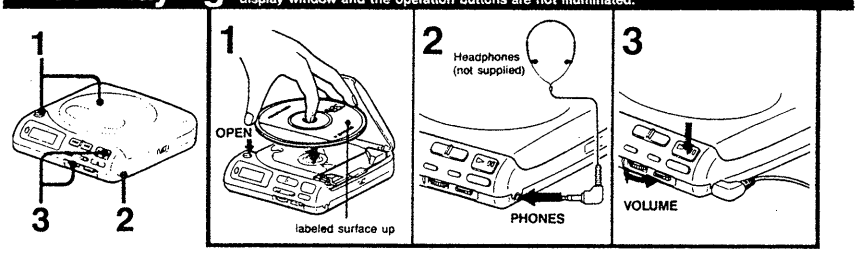

To resume disc play from the point where you stopped the play last time (Resume play mode)

You can resume the disc play from the point where you pressed the ■ button last time. To enter this mode, set the HOLD/RESUME switch to the second position (refer to the table shown in the right).

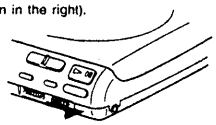

The memory of the stopped point is canceled if....

— you open the lid after pressing the ■ button
— you remove the AC power adaptor from the outlet or remove the car battery cord from the cigarette lighter socket when using with them
— you set the ignition key to the off position when using in a car whose DC supply is cut down at the off position.

When you use it in a car

We recommend you to install the batteries for the resume play. The memory of the stopped point will be maintained by the batteries even if you remove the car battery cord or set the ignition key to the off position.

The positions of the HOLD/RESUME switch

	1st. (left)	2nd	3rd. (right)
HOLD	OFF →	OFF →	ON
Resume play mode	OFF →	ON	(→ ON*)

*When you use the remote controller.

Other Operation

To pause

Press the ►II button. (To play, press it again.)

To stop

Press the ■ button.

To play 8 cm (3 inches) CD

You can play 8 cm (3 inches) CD without an adaptor.

Emphasizing the bass sound

Set the BASS BOOST switch to a desired position. The bass sound will be boosted more powerfully.

Note

The bass boost effect may be decreased according to the output level of the recording sound or a position of the volume control.

On the Display Window

When you press the ►II button

The number of the selections on the disc and the total playing time will appear for 2 seconds.

Example

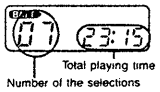

During the playback

The track number and the elapsed playing time of the currently played selection will appear.

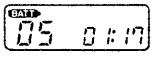

1 min. 17 sec. has elapsed from the beginning of the fifth selection.

During the pause

The elapsed playing time of the current point flashes.

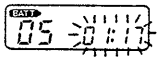

Pause mode at the point 1 min. 17 sec. from the beginning of the fifth selection

Between the selections

The time to the beginning of the next selection will appear.

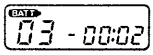

2 sec. to the beginning of the 3rd selection

SECTION 2
SERVICING NOTES

NOTES ON HANDLING THE OPTICAL PICK-UP BLOCK OR BASE UNIT

The laser diode in the optical pick-up block may suffer electrostatic breakdown because of the potential difference generated by the charged electrostatic load, etc. on clothing and the human body.
During repair, pay attention to electrostatic breakdown and also use the procedure in the printed matter which is included in the repair parts.
The flexible board is easily damaged and should be handled with care.

Flexible Circuit Board Repairing

- Keep the temperature of the soldering iron around 270 ℃ during repairing.
- Do not touch the soldering iron on the same conductor of the circuit board (within 3 times).
- Be careful not to apply force on the conductor when soldering or unsoldering.

Notes on chip componet replacement

- Never reuse a disconnected chip component.
- Notice that the minus side of a tantalum capacitor may be damaged by heat.

CAUTION

1. To prevent damages to the S801 (OPEN SW)
   If the P plate is installed when the CD cover is closed, the S801 lever is positioned behind the open/close arm section of the cover. Thus, when the cover is opened, the S801 will be damaged.

- To prevent damages to the S801 (OPEN SW), do not install the P plate when the CD cover is closed. Install the P plate when the CD cover is opened. In addition, check the position of the S801 lever when installing the P plate.

2. Special mode for normal operation check
   The S801 (OPEN SW) of the D-802K is found near the contact joint of the cover. Since it is difficult to turn the power ON without the cover with the test tool, conduct the following step to enable normal operation without the cover.

- Press the PLAY and STOP button simultaneously while turning the DC power supply ON.

Before Replacing the Optical Block

Please be sure to check thoroughly the parameters as for the "Optical Block Checking Procedures" (Part No. : 9-960-027-11) issued separately before replacing the optical block. Note and specifications required to check are given below.

- FOK output : IC501 ⑨ pin
  When checking FOK, remove the lead wire to disc motor and unsolder IC801 ㉒ pin (FOK).
- S carve P-to-P value : 3Vp-p
  When checking S carve P-to-P value, remove the lead wire to disc motor.
- Adjusted part for focus gain adjustment : RV501
- RF signal P-to-P value : 0.7 — 1.25Vp-p
- Traverse signal P-to-P value : 1.5 — 2.3Vp-p
- The repairing grating holder is impossible.
- Adjusted part for tracking gain adjustment : RV502

NOTES ON LASER DIODE EMISSION CHECK

The laser beam on this model is concentrated so as to be focused on the disc reflective surface by the objective lens in the optical pick-up block.
Therefore, when checking the laser diode emission, observe more than 25cm away from the objective lens.

Laser Diode Check Procedure

The laser diode on this set will not emit unless the top panel is closed and S801 (leaf SW type) is turned on. The laser diode will always emit even if focus search is not performed in servece mode.
The laser diode is checked using, the current value which flows to the laser diode inside the optical pick-up block.

Procedure 1 (service mode or normal operation)

Check the laser diode emission with the eye.

1. Open upper panel.
2. S801 on as Fig. 1.
   (In service mode, this operation is not necessary.)
3. Press the ▶II key.
   (In service mode, this operation is not necessary.)
4. Observe the objective lens and confirm that the laser diode is emitting light. At this time, the laser diode goes on about 10 seconds due to focus search. If it does not, APC circuit or optical pick-up block is defective.

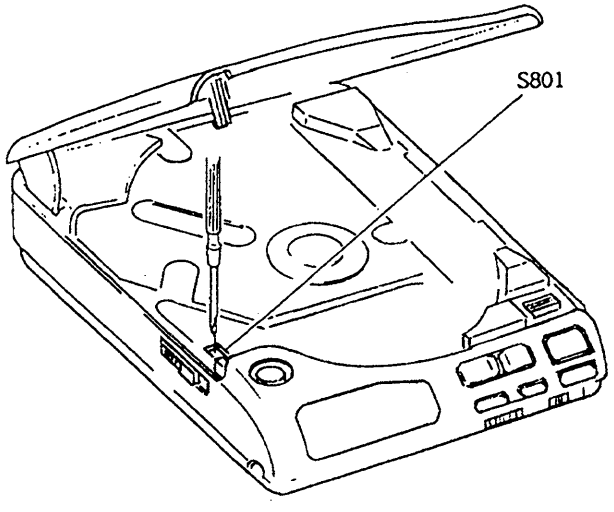

Fig. 1 Turning S801 on

Procedure 2 (service mode or normal operation)

Check by the current with flows the laser diode.

1. Close the top panel.
2. Remove the main board and read the current value on the label affixed to the optical pick-up block.
   (Label on optical pick-up block)

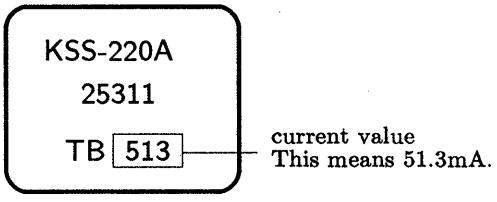

   The current value varies with the set.
3. Connect a VOM as shown in fig. 2.
4. Press the ▶II key.
5. Calculate the current by the VOM reading.
   VOM reading (V) ÷ 10 = current (A)
   ex. VOM reading = 0.56V
   0.56 ÷ 10 = 0.056 (A) = 56 (mA)
6. Confirm that the ammeter reading is within the range given below.
   value on label $^{+5}_{-11}$ mA (25℃)
   variation relative to temperature : 0.4mA/℃
   (Current increases when temperature rises and decreases when it drops.)

If the value is more than the range give, APC circuit has been defective or the laser diode has deteriorated.
If it is less, APC circuit or optical pick-up block is defective.

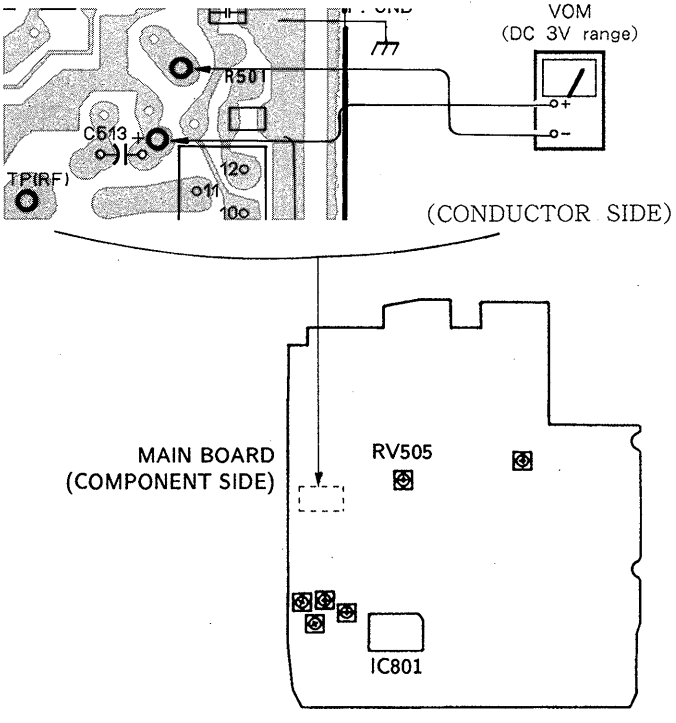

Fig. 2

SERVICE MODE (service program)

This set has built-in service program in the microcomputer as usual sets.

The operation method of service program is explained below.

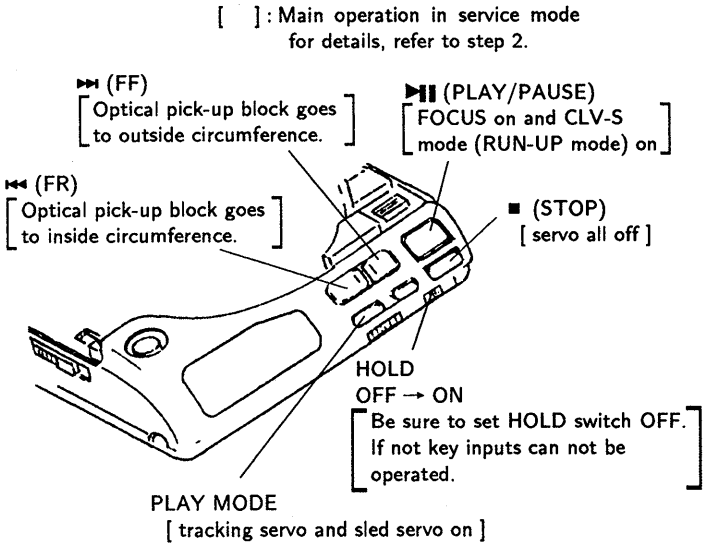

Fig. 3 Key Positions

• Step 1 (Service Mode setting method)

1. Turn the HOLD switch OFF with the external power supply not plugged in (no power applied to set) and press the ⏯ key.
2. Solder jumper TEST terminal.
   (IC801 pin ㉔ (TEST) is grounded.)
3. Plug in external power supply.
   This puts the set into service mode.

• Step 2 (Service Mode operation)

1. When service mode is set, the display will change 6 times, and those 6 change will be repeated over and over.
   With this the LCD display should be present in service mode. Even if LCD does not display, other operations will be performed.
2. When ⏭ or ⏮ key is pressed, the optical pick-up block moves to the inside or outside circumference. Tracking servo and sled servo go off when this is done, so press PLAY-MODE to turn on the tracking servo if necessary.
3. When ⏯ key is pressed, CLV-S (pull-in mode) starts while performing focus search. When there is no disc installed, focus search is repeated several times while disc motor is rotating.
4. When PLAY-MODE is pressed, tracking servo, sled servo and CLV-A (servo during PLAY) go ON.
5. When 3 and 4 are performed, the disc begins to play. At this time, the top panel should be closed and S801 is to be ON. A sound is not produced as muting is ON.
6. All servo (focus, tracking, sled and spindle) go off when ■ key is pressed.

• Step 3 (Service Mode release)

1. First be sure to unplug the external power supply, then remove the solder jumper TEST terminal.
2. The set will now operated normally.

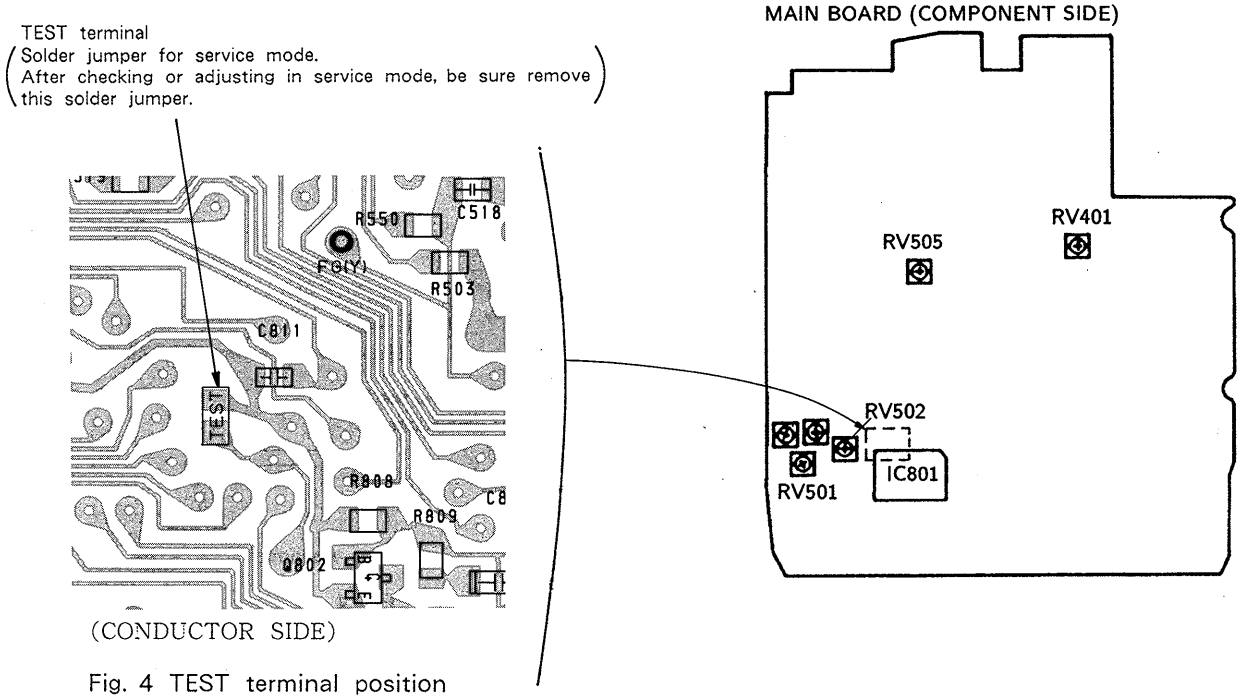

Fig. 4 TEST terminal position

RACK ASSY INSTALLING PROCEDURE

The positioning adjustment is required when installing the rack assy.
Perform the adjustment using with rack assy positioning jig.

Description	Part No.
Rack Assy Positining Jig	4-931-565-01

[Adjustment Procedure]

(1) Position the rack assy so that the distance A and B becomes equal by rotating the sled gear.
(A = B = 6mm)
Loosen the rack assy mounting screws.

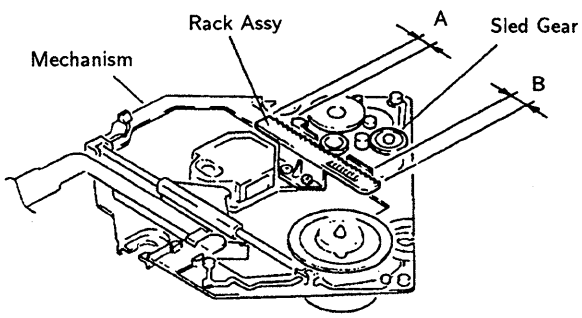

Fig. 1

(2) Place the positioning jig on the mechanism as shown in figure 2.
The shaft comes in the "U" gutter of jig.

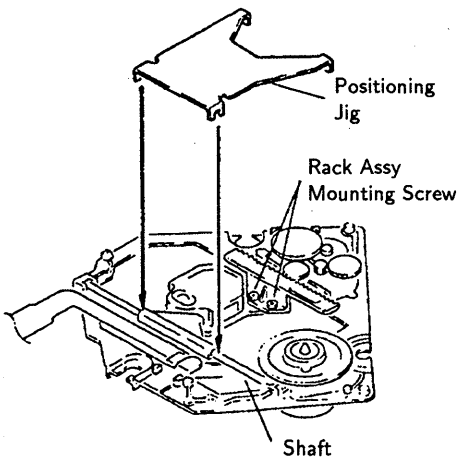

Fig. 2

(3) While pressing the rack assy to the direction of arrow in order to keep the contact the teeth of rack gear with the jig, tighten the screws.
Note : Tighten the each screw alternately and littel by little.

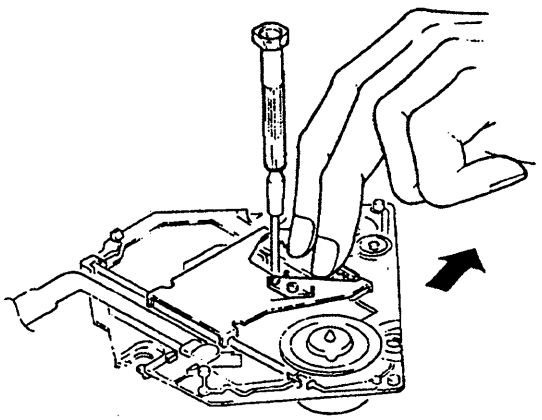

Fig. 3

(4) Confirn the clearance between the teeth of rack gear and the jig as shown in figure 4.
Remove the rack assy side of jig first when removing the jig.
(Be sure not to remove it from the shaft side first.)

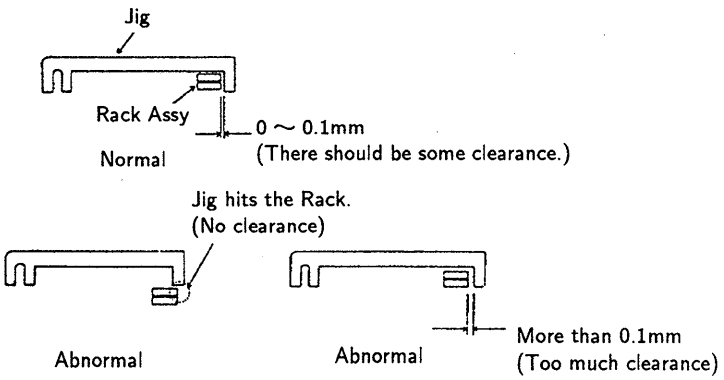

Fig. 4

SECTION 3
ELECTRICAL ADJUSTMENT

Notes on Adjustment

1. Perform adjustments in service mode.
   Be sure to release service mode after completing adjustments.
   (Refer to "Service Mode (service program)" on page .)
2. Perform adjustments in the order given.
3. Use YEDS-18 disc (part No. : 3-702-101-01) unless otherwise indicated.
4. Power supply voltage : DC 9V
   HOLD switch : OFF

PREPARATION

Put the set into service mode (See page .) and perform the following checks. Repair if there are any abnormalities.

• Sled Motor Check

1. Press the OPEN button and open the top panel.
2. Press the ⏭, ⏮ keys and make sure that the optical pick-up block moves smoothly, without catching, from the inmost → outmost → inmost circumference.
   ⏭ : optical pick-up block moves outward
   ⏮ : optical pick-up block moves inward

• Focus Search Check

1. Press the OPEN button and open the top panel.
2. Press the ▶II key. (Focus search is performed continuously.)
3. Observe the optical pick-up bolck objective lens and check that it moves smoothly up and down with no catching or noises.
4. Press the ■ key.
   Check that focus search operation stops. If it does not, press the ■ key again.

VC (1/2 VCC) Connecting Point

FOCUS BIAS ADJUSTMENT
TRACKING BALANCE ADJUSTMENT

When the adjustments above are performed, connect the ⊖ side of oscilloscope to the point below.

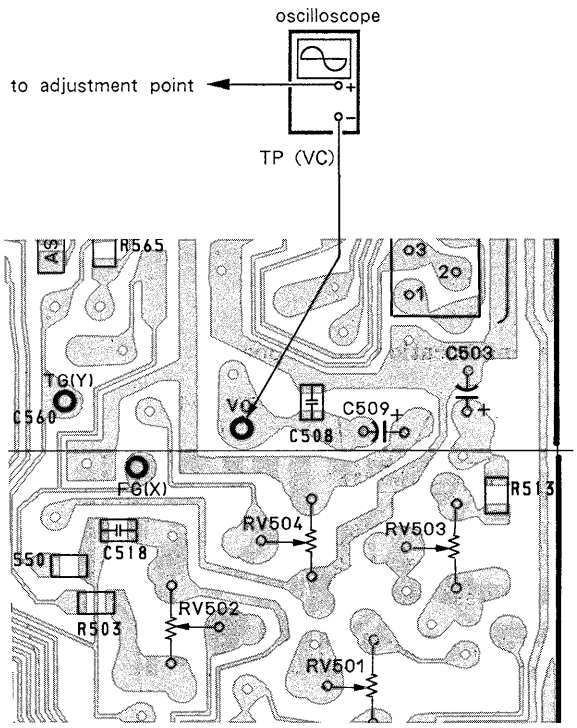

(CONDUCTOR SIDE)

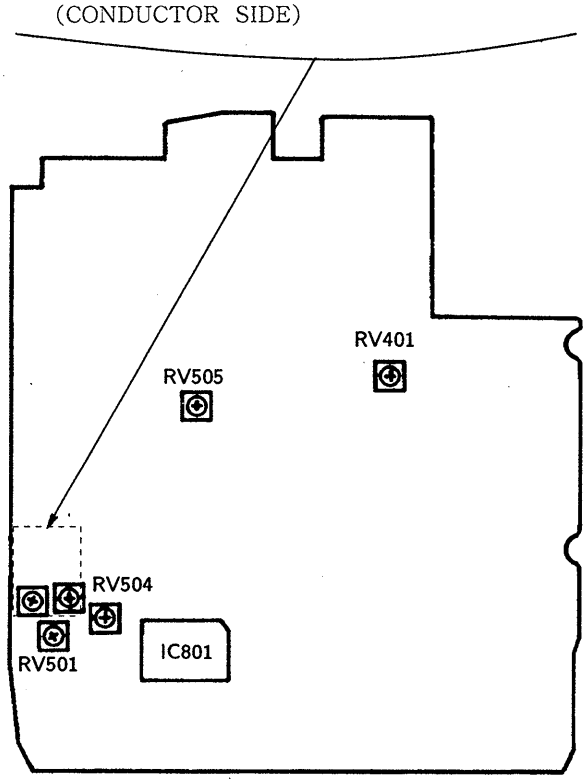

MAIN BOARD (COMPONENT SIDE)

AVCC Adjustment

Ajustment Procedure :

1. Put the set into service mode (See page 7).
2. Connect the VOM to main board test point TP (AVCC).
3. Adjust RV401 for 5.2V — 5.3V reading on the VOM.
4. After adjustment, release service mode (See page 7).

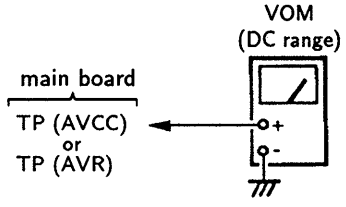

AVR Adjustment

Ajustment Procedure :

1. Put the set into service mode (See page 7).
2. Connect the VOM to main board test point TP (AVR).
3. Adjust the pattern connection (Ⓐ or Ⓑ) to obtain 3.45V to 3.6V reading on the VOM.

pattern connection		VOM reading
A	B	
○	×	down ↑
×	×	
×	○	
○	○	up

○ : short　　× : open

Asjustment Location : main board

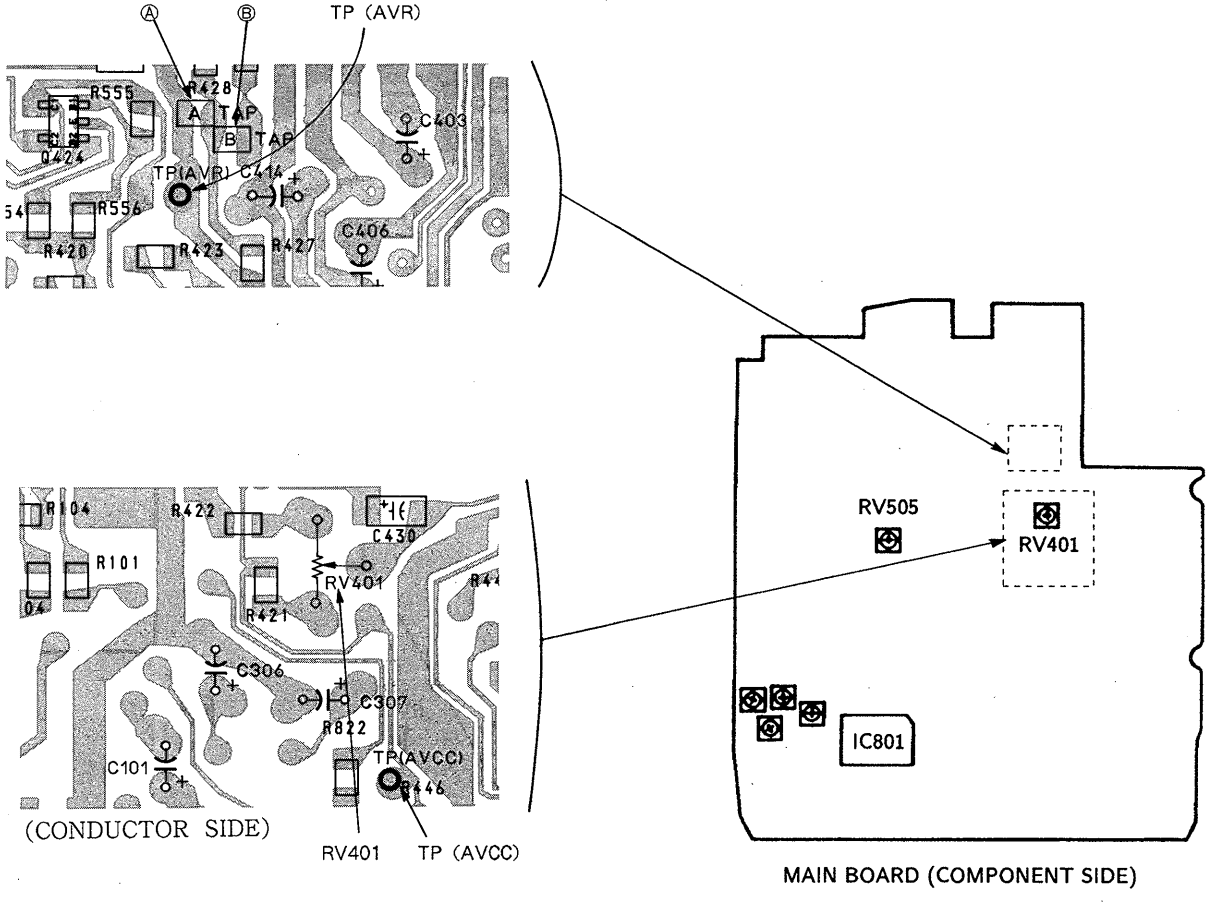

PLL Free Run Frequency Check and Ajustment

Check / Ajustment Procedure :

1. Disconnect ASY solder jumper terminal in the diagram below.

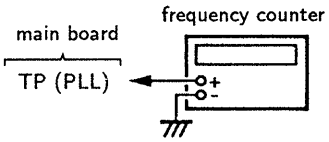

2. Connect a frequency counter to main board test point TP (PLL).
3. Put the set into service mode (See page 7).
4. Check that the frequency counter reading is 4.31 ± 0.01MHz. If not, adjust RV505 so that it is 4.31 ± 0.01MHz.
5. After adjustment, release service mode (See page 7).
6. Short the jumper terminal disconnected in step 1.

Check/Ajustment Location : main board

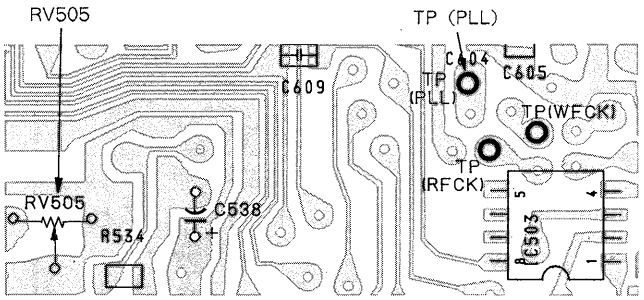

(CONDUCTOR SIDE)

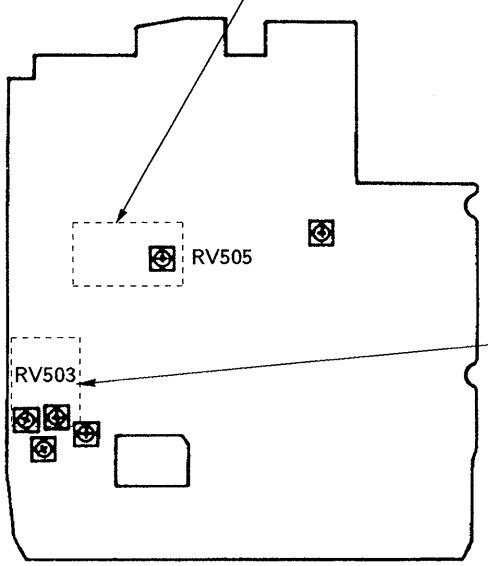

Tracking Balance Adjustment

Conditions :

The set should be placed either horizontally.

Adjustment Procedure :

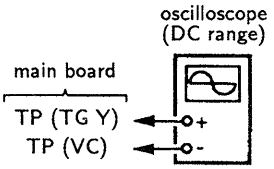

1. Connect the oscilloscope to main board TP (TG Y).
2. Put the set into service mode (See page 7).
3. Press the ⏭ and ⏮ keys to move the optical pick-up block to the center.
4. Insert the disc (YEDS-18) and close the top panel.
5. Press the ⏯ key.
   It will go from focus search to focus on, and CLV pull -in mode state. Tracking and sled are OFF.
6. Adjust RV503 so that the oscilloscope wavaform is symmetrical on the top and bottom in relation to 0V.

Note : Take sweep time as long as possible to obtain best waveform.

7. Press the ■ key.

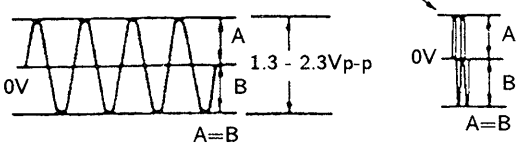

8. After adjustment, release service mode (See page 7).

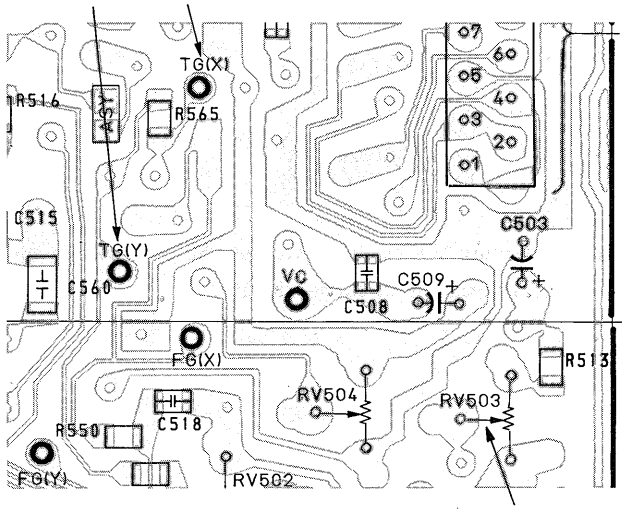

(CONDUCTOR SIDE)

RV503

Focus Bias Adjustment

Conditions :

The set should be placed either horizontally.

Adjustment Procedure :

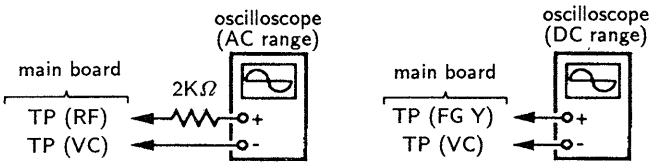

1. Put the set into service mode (See page 7).
2. Connect the osilloscope to main board test point TP (RF).
3. Press the ⏭ and ⏮ key to move the optical pick-up block to the center. (Move the optical pick-up block to the music area on the disc to enable easy visibility of the eye pattern).
4. Insert the disc (YESD-18) and close the top panel.
5. Press the ▶II key.
   (It will go from focus search to focus on, and CLV pull-in mode state. Tracking and sled are OFF.)
6. Press the REPEAT button (Tracking and sled go ON.)
7. Adjust RV504 so that the oscilloscope waveform eye pattern is good. A good eye pattern means that the diamond shape (◇) in the center of the waveform can be clearly distinguished.

• RF Signal Refernce Waveform (eye pattern)

VOLT/DIV : 200mV
TIME/DIV : 500nS

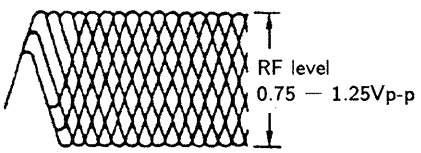

When observing the eye pattern, set the oscilloscope for AC range and raise vertical sensitivity.

8. Press the ■ key.
9. Remove the disc and connect the oscilloscope to main board TP (FG Y).
10. Adjust RV504 again refering to the table followed.

voltage of TP (FG Y)	Do not adjust again
+50 to 100mV	Adjust RV504 again for +100mV reading on oscilloscope.

11. After adjustment, release service mode (See page 7).

Adjustment Location : main board

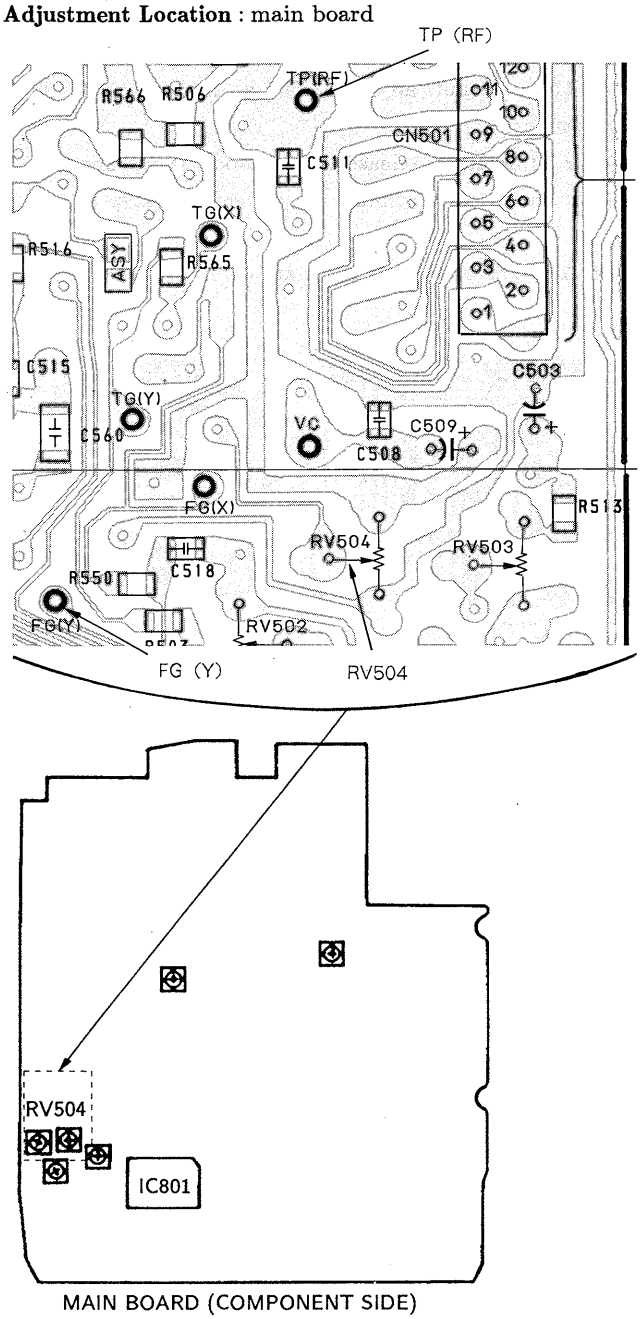

MAIN BOARD (COMPONENT SIDE)

Reference

Focus/Tracking Gain Adjustment

A frequency responce analyzer or CD jig is necessary in order to perform this adjustment exactly.

> However, this gain has a margin, so even if it is slightly off, there is no problem. Therefore, do not perfrom this adjustment.

Focus/tracking gain determines the pick-up followup (vertical and horizontal) relative to mechanical noise and mechanical shock when the 2-axis device operate.
However, as these reciprocate, the adjustment is at the point where both are satisfied.

- When gain is high, the noise when the 2-axis device operates increases.
- When gain is low, it is more susceptible to mechanical shock and skipping occurs more easily.

This adjustment is to be performed when replacing the following parts :

- UPF (optical pick-up block)
- RV501 (focus gain volume)
- RV502 (tracking gain volume)

> On this set, it is very difficult to simplify this adjustment. For those sets on which symptoms such as "occasional skipping" are hard to discover, or it is hard to tell if the set has been repaired, use the CD jig and perform this adjustment. Refer to the diagram below for connection of the CD jig. The adjustment procedure is described in the separate CD jig Instruction Manual.

Please be careful no to move RV501 (focus gain volume). RV502 (tracking gain volume) ordinarily.

CD jig connection :

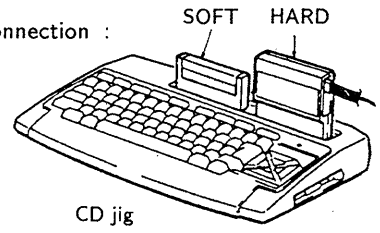

Remove the solder jumpers at the TG and FG locations and connect the CD jig.

MAIN BOARD (COMPONENT SIDE)

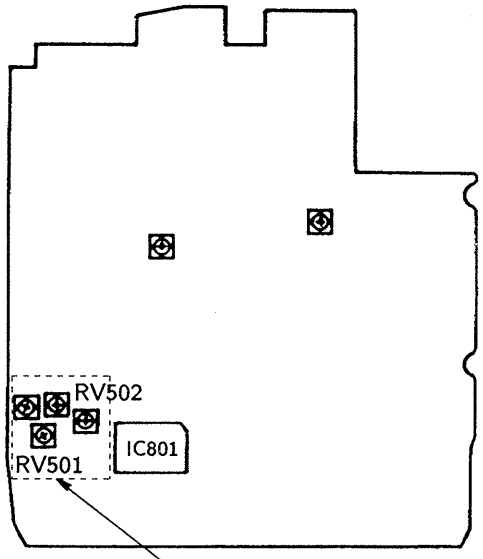

(CONDUCTOR SIDE)

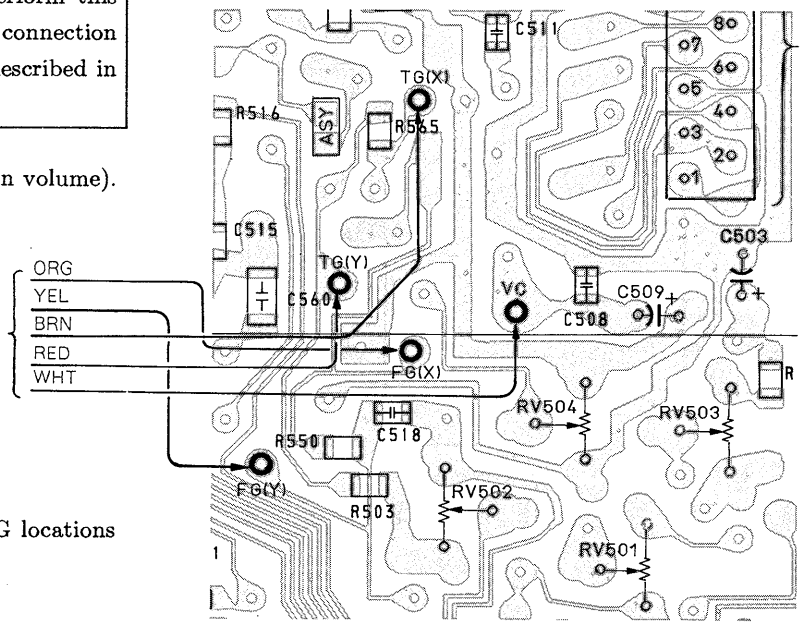

SECTION 4
DIAGRAMS

4-1. BLOCK DIAGRAM

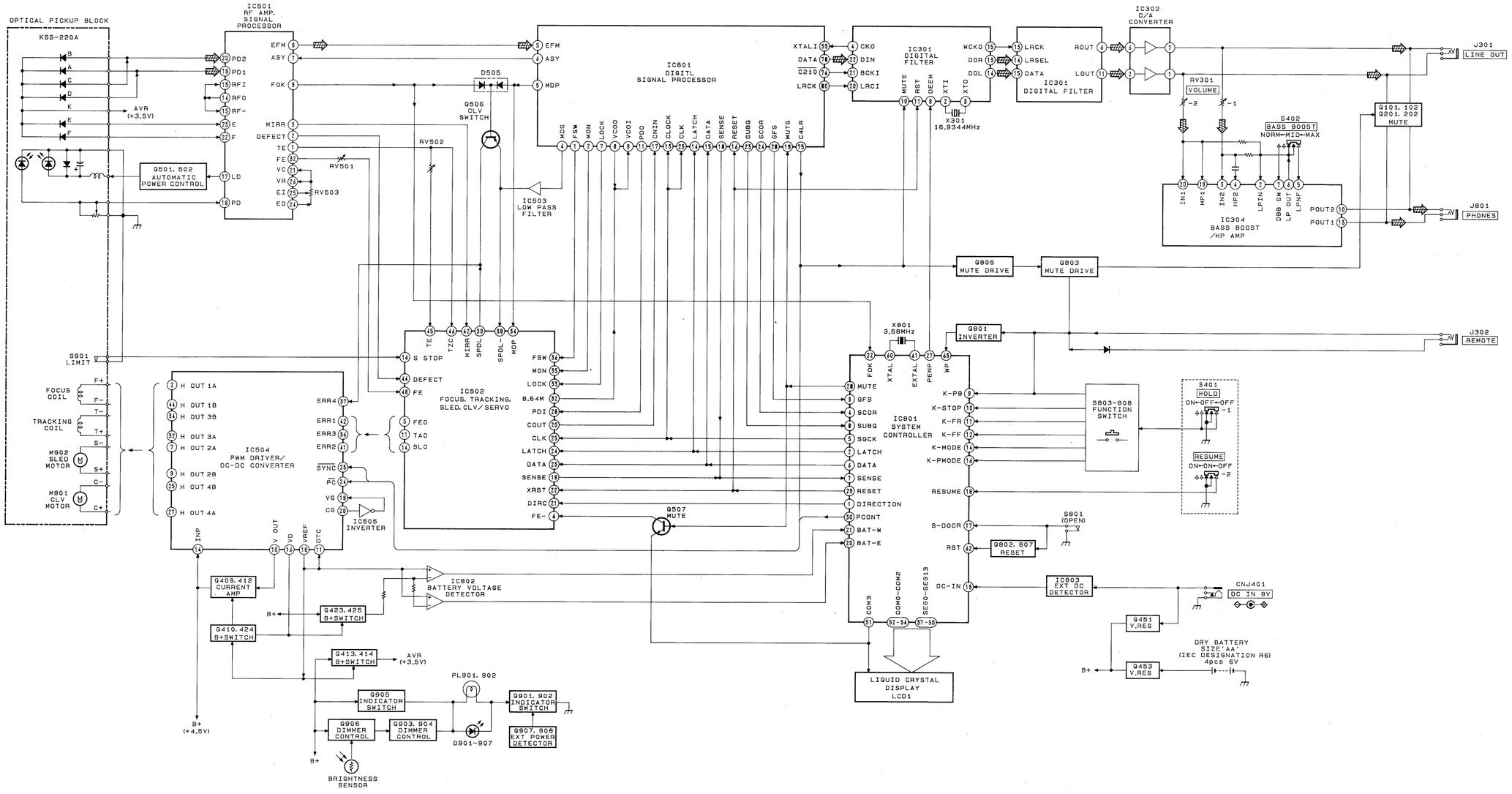

• SEMICONDUCTOR LEAD LAYOUTS

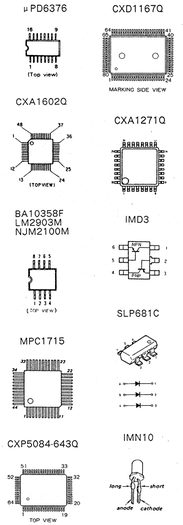

• SEMICONDUCTOR LOCATION

Ref. No.	Location	Ref. No.	Location
D401	B-6	Q101	H-5
D402	C-14	Q102	H-5
D409	D-4	Q201	H-4
D501	C-9	Q202	I-5
D502	D-8	Q409	D-5
D503	C-9	Q410	C-4
D504	C-9	Q412	D-4
D505	F-13	Q413	C-4
D601	D-7	Q414	C-4
D801	H-15	Q423	E-16
D803	I-6	Q424	D-4
D804	J-8	Q425	D-16
D805	J-9	Q451	D-16
D806	H-15	Q453	B-5
D807	I-15	Q501	F-11
D901	B-22	Q502	F-11
D902	D-22	Q506	G-7
D903	F-22	Q507	H-15
D904	E-24	Q801	I-15
D905	D-24	Q802	J-8
D906	C-24	Q803	H-16
D907	B-24	Q805	H-16
D908	F-22	Q807	J-9
D909	E-9	Q901	A-13
D910	B-14	Q902	B-8
		Q903	D-9
IC301	D-6	Q904	D-9
IC302	F-16	Q905	E-9
IC303	E-2	Q906	J-9
IC304	G-2	Q907	C-14
IC501	G-12	Q908	B-14
IC502	G-14		
IC503	F-8		
IC504	C-12		
IC505	D-9		
IC601	E-12		
IC801	I-13		
IC802	J-12		
IC803	G-5		

• CIRCUIT BOARDS LOCAION

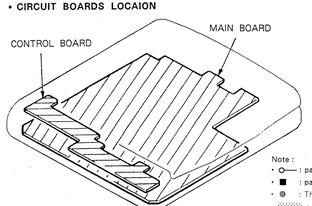

Note :
- ○— : parts extracted from the component side.
- ■ : parts mounted on the conductor side.
- ● : Through hole.
- ▒ : Pattern on the side which is seen.
- ▒ : Pattern of the rear side.

4-2. PRINTED WIRING BOARDS

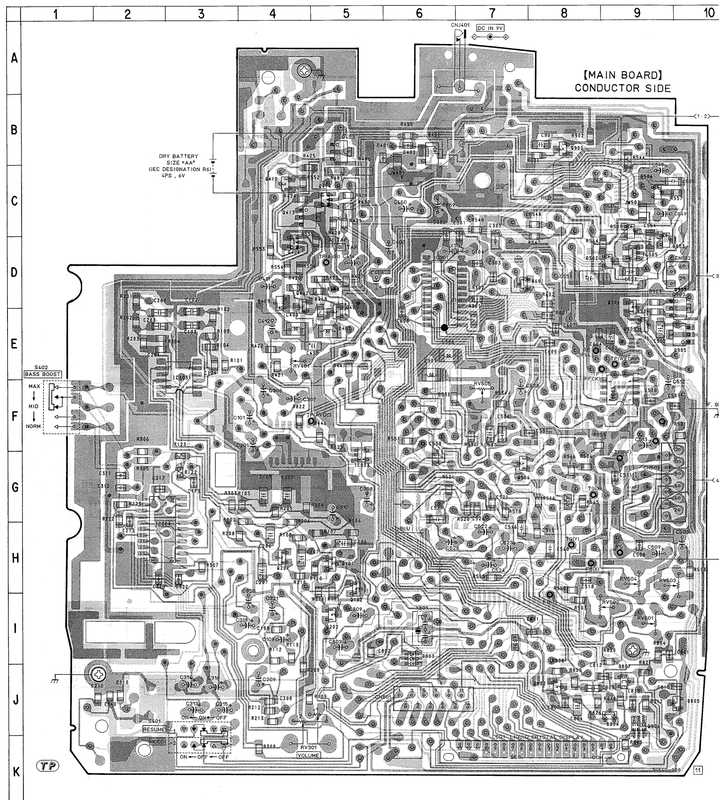

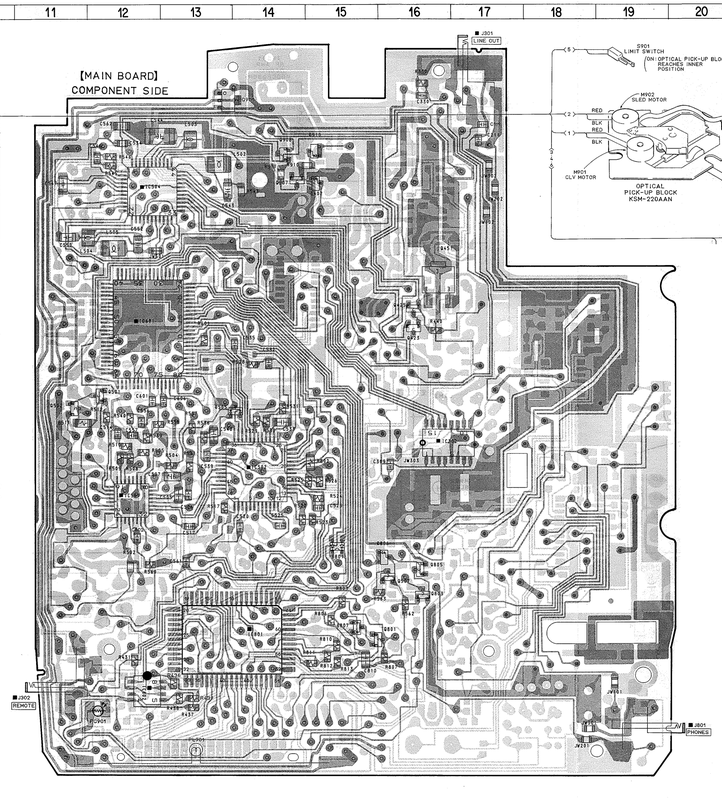

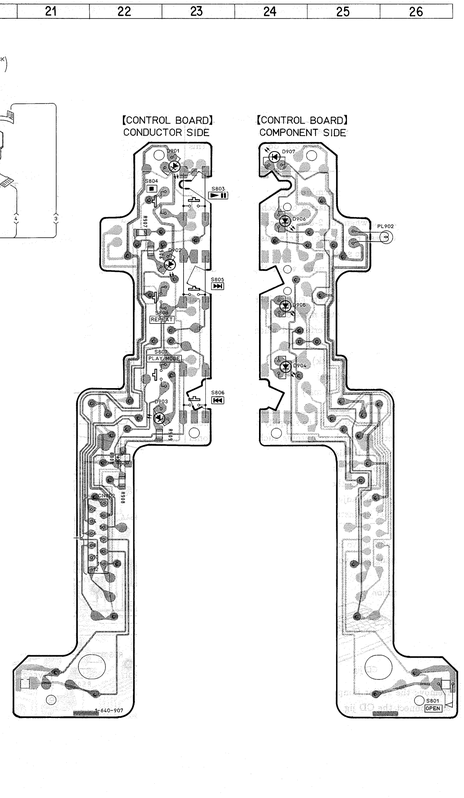

4-3. SCHEMATIC DIAGRAM • Refer to page 25 for IC Block Diagrams.

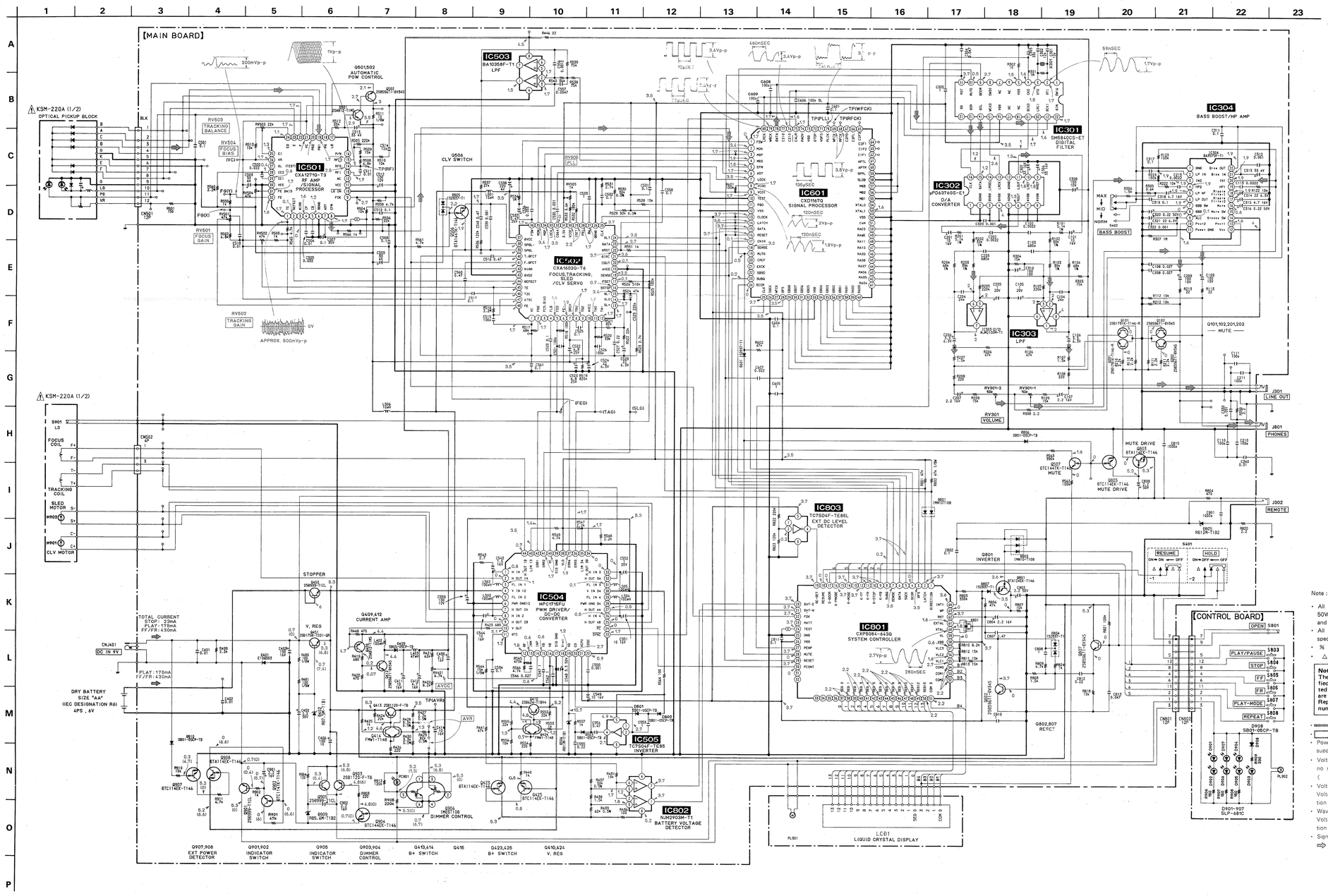

Note :

- All capacitors are in μF unless otherwise noted. pF : μμF 50WV or less are not indicated except for electrolytics and tantalums.
- All resistors are in Ω and ¼W or less unless otherwise specified.
- % : indicates tolerance.
- △ : internal component.

Note: The components identified by mark ⚠ or dotted line with mark ⚠ are critical for safety. Replace only with part number specified.	Note: Les composants identifiés par une marque ⚠ sont critiques pour la sécurité. Ne les remplacer que par une pièce portant le numéro spécifié.

- ▬▬ : B+ Line
- ▭ : adjustment for repair.
- Power voltage is dc 6V and fed with regulated dc power supply from battery terminal.
- Voltage and waveforms are dc with respect to ground. no mark : PLAY
  ( ) : PLAY (fed external dc)
- Voltages are taken with a VOM (input impedance 10M Ω). Voltage variations may be noted due to normal production tolerances.
- Waveforms are taken with a oscilloscope. Voltage variations may be noted due to normal production tolerances.
- Signal path.
  ⇨ : CD

• IC BLOCK DIAGRAMS

IC301 SM5840CS

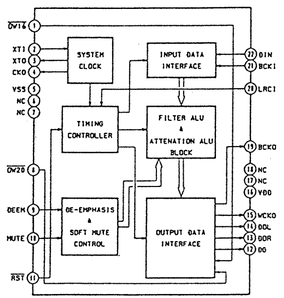

IC302 μPD6376

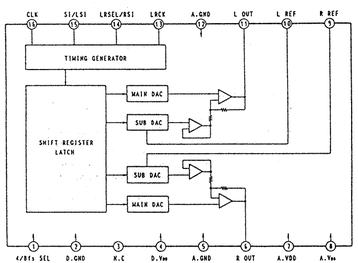

IC304 BA3570F

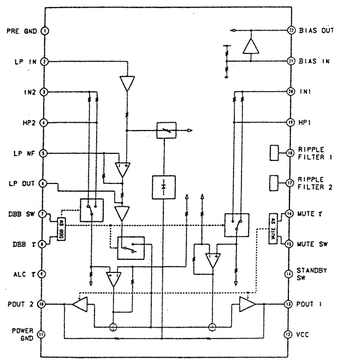

IC502 CXA1602

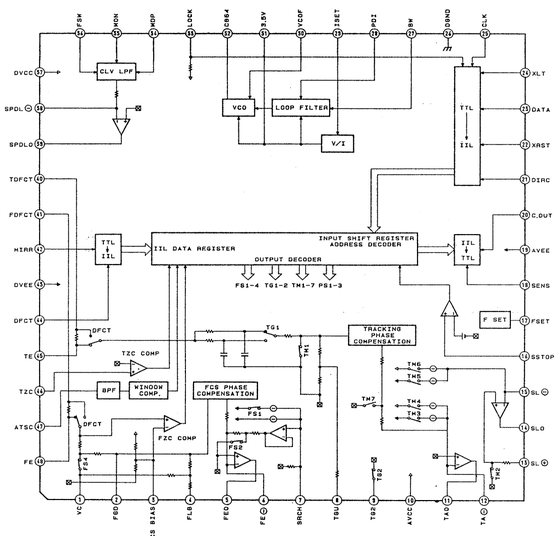

IC501 CXA1271Q

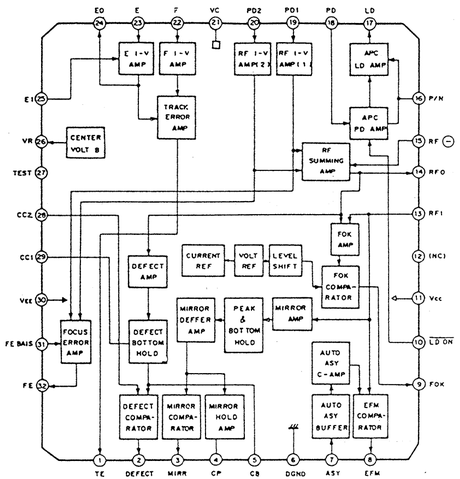

IC504 MPC1715

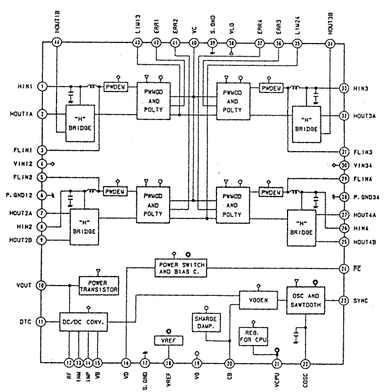

IC601 CXD1167Q

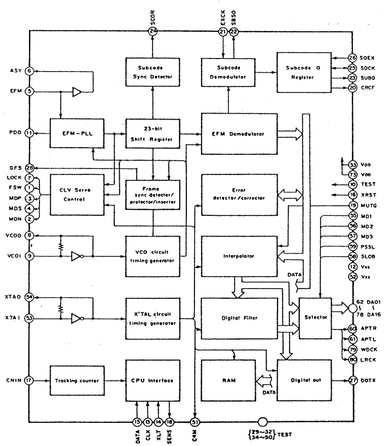

SECTION 5
EXPLODED VIEWS

NOTE:

- –XX, –X mean standardized parts, so they may have some differences from the original one.
- The construction parts of an assembled part are indicated with a collation number in the remark column.
- Color indication of Appearance Parts Example:
  KNOB, BALANCE (WHITE)....(RED)
  ↑ Parts color ↑ Cabinet's color
- Items marked "*" are not stocked since they are seldom required for routine service. Some delay should be anticipated when ordering these items.
- The mechanical parts with no reference number in the exploded views are not supplied.
- Hardware (#mark) list is given in the last of this parts list.

The components identified by mark ⚠ or dotted line with mark ⚠ are critical for safety.
Replace only with part number specified.

Les composants identifiés par une marque ⚠ sont critiques pour la sécurité.
Ne les remplacer que par une pièce portant le numéro spécifé.

5-1. CHASSIS SECTION

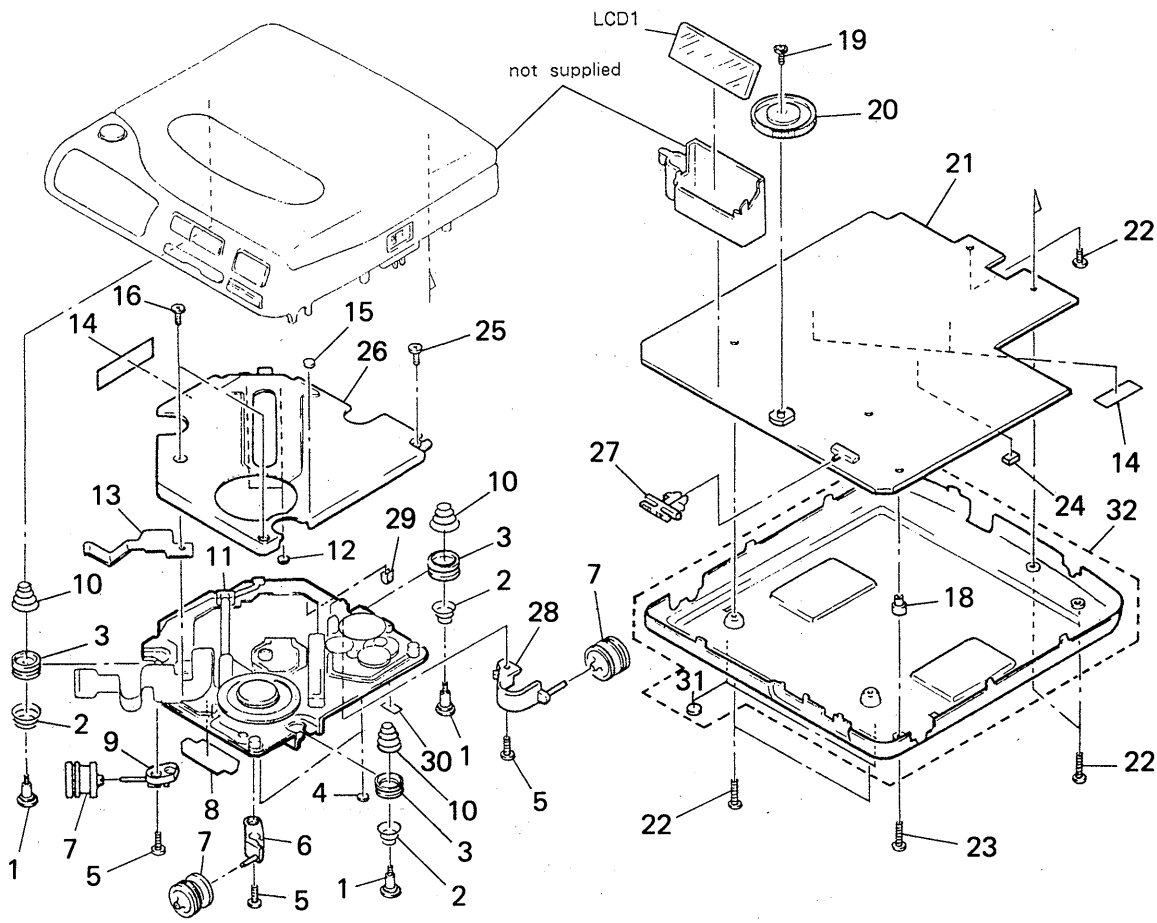

Ref. No.	Part No.	Description	Remark
1	4-916-282-01	SCREW, INSU	
2	4-916-215-01	SPRING (A1)	
3	4-916-218-01	HOLDER, SPRING	
4	* 3-312-975-21	SPACER	
5	3-318-203-71	SCREW (B1.7X5), TAPPING	
6	4-916-210-01	BAR (A), DAMPER	
7	3-330-929-01	DAMPER (2), HYPER	
8	* 4-916-274-01	SHEET, BLIND	
9	4-916-209-01	BAR (B), DAMPER	
10	4-916-214-01	SPRING (B1)	
11	⚠ 8-848-151-11	DEVICE, OPTICAL KSM-220AAN (S)	
12	4-917-784-01	SPACER (S)	
13	4-924-761-01	PAPER (A), SHIELD	
14	* 4-926-115-01	CUSHION (P)	
15	* 4-924-188-01	CUSHION	
16	3-893-942-01	SCREW (1.7X4), TAPPING (B)	
18	* 4-916-252-01	SPACER (PC BOARD)	

Ref. No.	Part No.	Description	Remark
19	3-335-797-21	SCREW (M1.4X3)	
20	4-924-732-01	KNOB (VOLUME)	
21	A-3275-221-A	MAIN BOARD, COMPLETE	
22	4-908-792-71	SCREW (B2X6), TAPPING, P1	
23	* 4-926-115-01	CUSHION (P)	
24	9-911-841-XX	CUSHION, CASSETTE LID	
25	3-893-942-01	SCREW (1.7X4), TAPPING (B)	
26	4-924-735-01	COVER, MD	
27	4-924-724-01	KNOB (HOLD)	
28	4-916-217-01	BAR (C), DAMPER	
29	3-831-441-XX	CUSHION	
30	* 3-561-902-11	CLOTH, RETAINING, CASSETTE	
31	4-912-641-01	FOOT, RUBBER	
32	X-4941-977-1	BOTTOM ASSY	
33	2-370-905-00	SCREW (B) (2X8), TAPPING	
LCD1	1-809-508-01	DISPLAY PANEL, LIQUID CRYSTAL	

5-2. CABINET SECTION

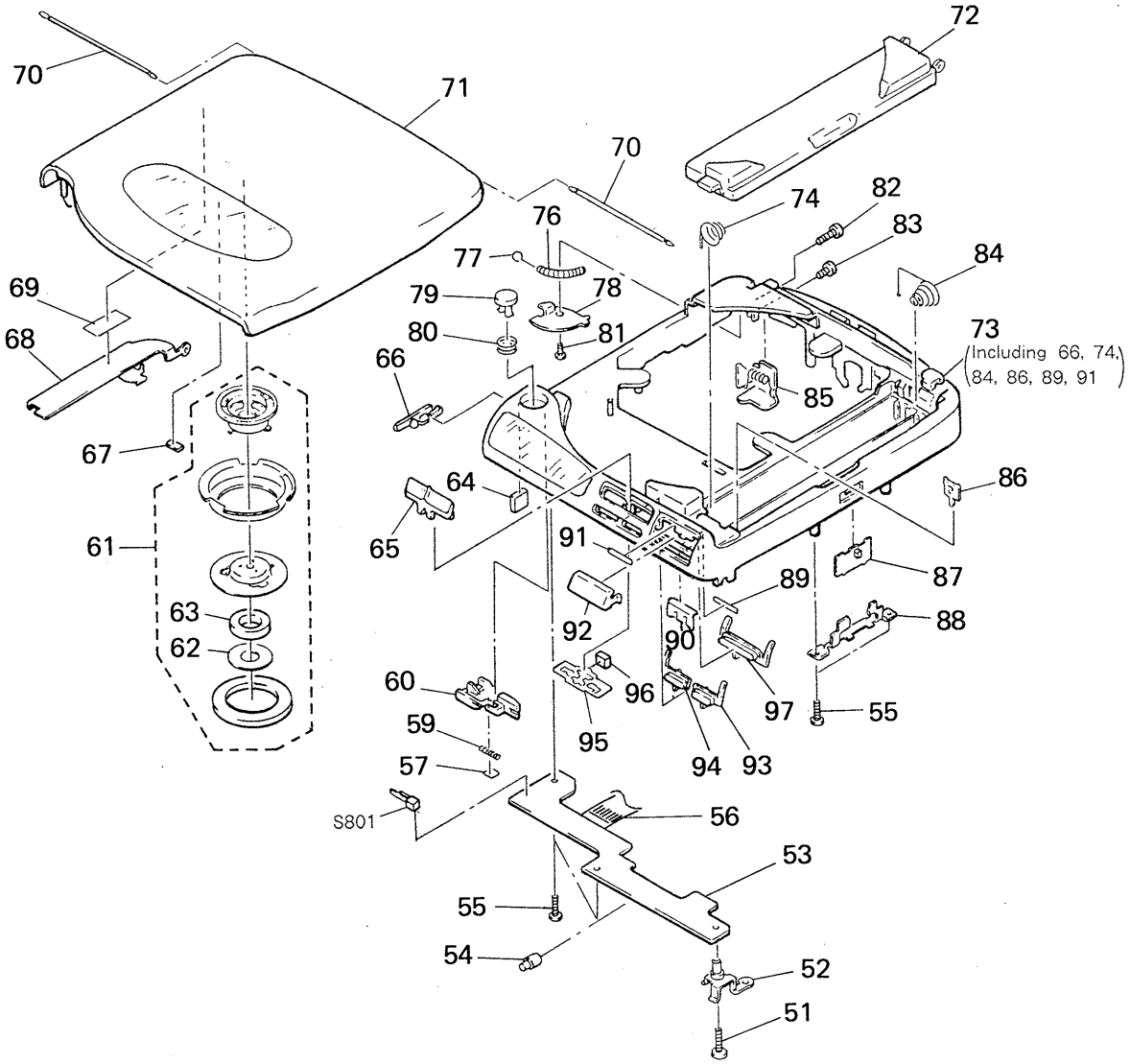

Ref. No.	Part No.	Description	Remark
51	4-908-792-81	SCREW (B2X11), TAPPING, P1	
52	X-4913-209-1	REINFORCEMENT ASSY	
53	1-640-907-11	CONTROL BOARD	
54	4-916-259-01	CAP	
55	3-318-203-62	SCREW (B1.7X4), TAPPING	
56	1-559-876-11	WIRE, FLAT TYPE (20 CORE)	
57	* 4-916-290-01	SPACER (LOCK)	
59	4-924-140-01	SPRING, COMPRESSION	
60	4-916-231-01	CLAW, LID LOCK	
61	A-3039-967-A	PLATE ASSY, CHUCK	
62	1-452-505-11	MAGNET	
63	* 4-926-629-03	SHEET, DISC HOLD	
64	3-322-044-01	SPACER, RUBBER	
65	4-916-226-01	BUTTON (AMS)	
66	4-916-225-01	KNOB (SAFETY)	
67	3-682-518-00	CUSHION	
68	4-916-224-01	ARM, SWITCHING	
69	3-884-241-01	SHEET (C), ADHESIVE	
70	4-916-204-01	SHAFT, FULCRUM	
71	X-4942-030-1	LID ASSY, UPPER	
72	4-926-619-21	LID, BATTERY CASE	
73	X-4942-116-1	CABINET ASSY	
74	4-926-627-01	SPRING (A)	

Ref. No.	Part No.	Description	Remark
76	4-926-633-01	SPRING (BALL), COMPRESSION	
77	7-671-155-01	STEEL BALL 3.0	
78	4-926-612-01	RETAINER, BALL	
79	4-924-130-01	BUTTON, OPEN	
80	4-942-162-01	SPRING, COMPRESSION	
81	4-908-792-01	SCREW (B2X3), TAPPING, P1	
82	3-703-816-52	SCREW (M1.4X3.5), SPECIAL HEAD	
83	3-703-816-82	SCREW (M1.4X6.0), SPECIAL HEAD	
84	2-298-630-11	SPRING (R)	
85	X-4913-235-1	SPRING ASSY	
86	3-881-922-11	BOARD, TERMINAL	
87	4-946-834-01	KNOB (DBB)	
88	* 4-946-836-01	PLATE (DBB), FIXED	
89	* 4-916-269-01	SPACER (PLAY)	
90	* 4-916-262-03	SHEET (PLAY)	
91	* 4-916-272-01	SPACER	
92	4-916-227-01	BUTTON (PLAY)	
93	4-916-221-01	BUTTON (MK)	
94	4-916-228-01	BUTTON (MP)	
95	* 4-916-263-02	SHEET (FR)	
96	9-911-839-XX	SPACER	
97	4-916-222-01	BUTTON (STOP)	
S801	1-554-297-31	SWITCH, LEAF (OPEN)	

5-3. MECHANISM SECTION (KSM-220AAN)

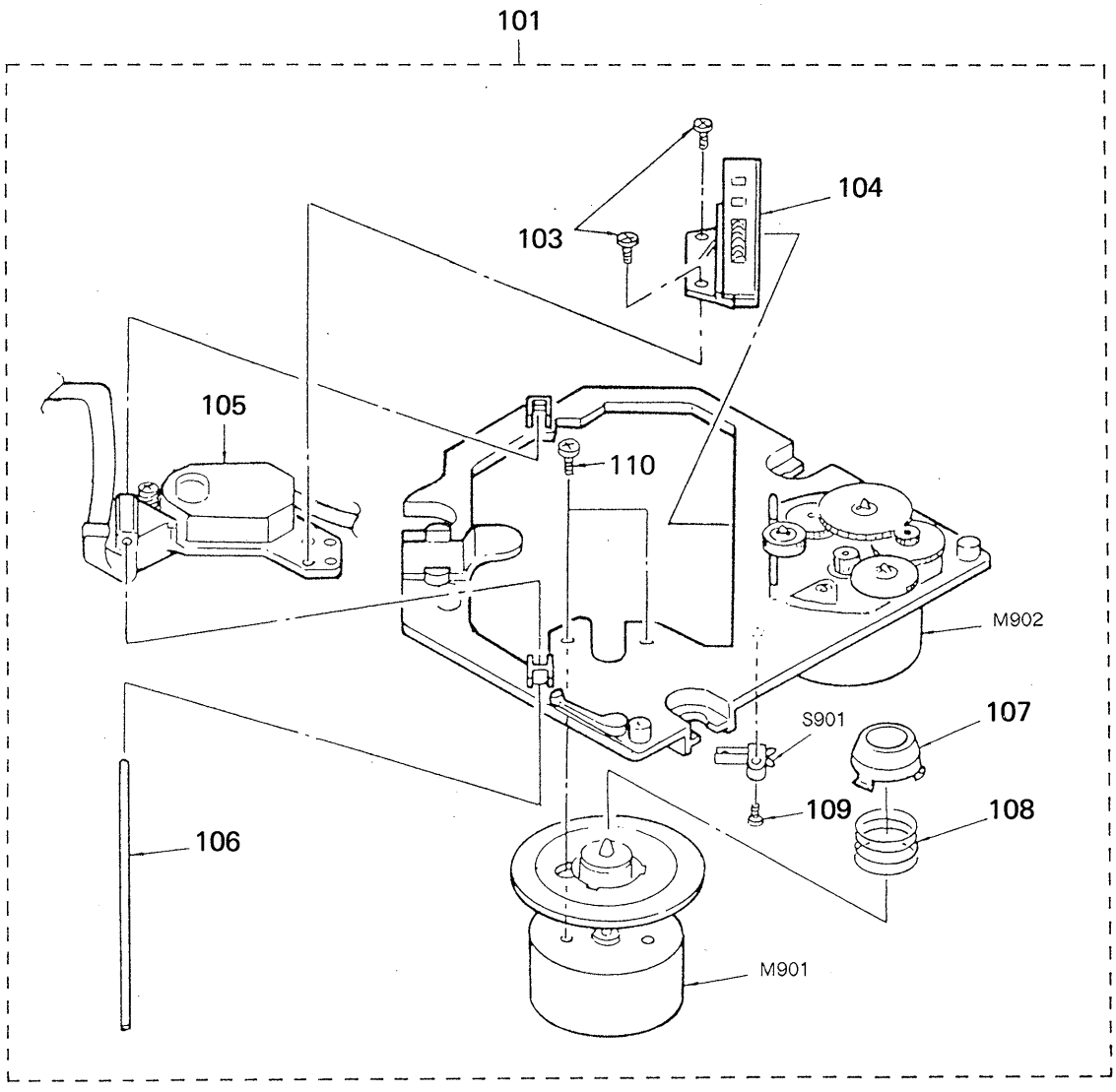

Note:	Note:
The components identified by mark ⚠ or dotted line with mark ⚠ are critical for safety. Replace only with part number specified.	Les composants identifiés par une marque ⚠ sont critiques pour la sécurité. Ne les remplacer que par une pièce portant le numéro spécifié.

Ref. No.		Part No.	Description	Remark
101	⚠	8-848-151-11	DEVICE, OPTICAL KSM-220AAN (S)	
103		2-641-383-01	SCREW (M1.7X4) (NK), TOOTH	
104		X-2641-528-1	RACK, ASSY	
105	⚠	8-848-142-11	DEVICE, OPTICAL KSS-220A (RP)	
106		2-641-534-01	SHAFT	
107		2-641-539-01	RING, CENTER	
108		2-641-524-01	SPRING (A), COMPRESSION	
109		7-685-103-19	SCREW +P 2X5 TYPE2 NON-SLIT	
110		7-627-552-88	SCREW, PRECISION +P 1.7X2.2	
M901		X-2641-521-1	MOTOR ASSY, T.T (SPINDLE)	
M902		X-2641-537-2	MOTOR ASSY, (A) (RP) (SLED)	
S901		1-570-112-11	SWITCH, LEAF (LIMIT)	

SECTION 6
ELECTRICAL PARTS LIST

CONTROL MAIN

NOTE:

- Due to standardization, replacements in the parts list may be different from the parts specified in the diagrams or the components used on the set.
- —XX, —X mean standardized parts, so they may have some difference from the original one.
- RESISTORS
  All resistors are in ohms
  METAL : Metal-film resistor
  METAL OXIDE : Metal Oxide-film resistor
  F : nonflammable
- Items marked "*" are not stocked since they are seldom required for routine service. Some delay should be anticipated when ordering these items.
- SEMICONDUCTORS
  In each case, u: μ, for example:
  uA....: μA...., uPA....: μPA....
  uPB....: μPB...., uPC....: μPC....
  uPD....: μPD....
- CAPACITORS
  uF: μF
- COILS
  uH: μH

The components identified by mark ⚠ or dotted line with mark ⚠ are critical for safety.
Replace only with part number specified.

Les composants identifiés par une marque ⚠ sont critiques pour la sécurité.
Ne les remplacer que par une pièce portant le numéro spécifié.

When indicating parts by reference number, please include the board name.

Ref. No.	Part No.	Description				Remark
	* 1-640-907-11	CONTROL BOARD				
		**********				
	4-916-250-01	HOLDER (LAMP)				
		< CONNECTOR >				
CN802	1-563-615-11	CONNECTOR, FLEXIBLE 12P				
		< DIODE >				
D901	8-719-980-46	DIODE	SLP681C			
D902	8-719-980-46	DIODE	SLP681C			
D903	8-719-980-46	DIODE	SLP681C			
D904	8-719-980-46	DIODE	SLP681C			
D905	8-719-980-46	DIODE	SLP681C			
D906	8-719-980-46	DIODE	SLP681C			
D907	8-719-980-46	DIODE	SLP681C			
D908	8-719-938-72	DIODE	SB01-05CP			
		< PILOT LAMP >				
PL902	1-518-657-11	LAMP, PILOT				
		< RESISTOR >				
R906	1-216-027-00	METAL CHIP	120	5%	1/10W	
R907	1-216-027-00	METAL CHIP	120	5%	1/10W	
R908	1-216-027-00	METAL CHIP	120	5%	1/10W	
R909	1-216-031-00	METAL CHIP	180	5%	1/10W	
		< SWITCH >				
S803	1-554-371-51	SWITCH, TACT (PLAY/PAUSE)				
S804	1-570-993-11	SWITCH, TACT (STOP)				
S805	1-554-371-51	SWITCH, TACT (FF)				
S806	1-554-371-51	SWITCH, TACT (FR)				
S807	1-570-993-11	SWITCH, TACT (PLAY MODE)				
S808	1-570-993-11	SWITCH, TACT (REPEAT)				

Ref. No.	Part No.	Description				Remark
	A-3275-221-A	MAIN BOARD, COMPLETE				
		**********				
	3-335-797-21	SCREW (M1.4X3), TOOTHED LOCK				
	* 4-916-256-01	SHEET, INSULATING, JACK				
	4-924-732-11	KNOB (VOLUME)				
		< CAPACITOR >				
C101	1-126-157-11	ELECT	10uF	20%	16V	
C102	1-163-213-00	CERAMIC CHIP	0.0022uF	5%	50V	
C103	1-163-201-00	CERAMIC CHIP	680PF	5%	50V	
C104	1-163-102-00	CERAMIC CHIP	24PF	5%	50V	
C105	1-135-177-21	TANTALUM CHIP	1uF	20%	20V	
C106	1-135-180-21	TANTALUM CHIP	3.3uF	20%	6.3V	
C107	1-135-179-21	TANTAL. CHIP	2.2uF	20%	16V	
C108	1-163-986-00	CERAMIC CHIP	0.027uF	10%	25V	
C109	1-124-584-00	ELECT	100uF	20%	10V	
C110	1-163-117-00	CERAMIC CHIP	100PF	5%	50V	
C111	1-163-117-00	CERAMIC CHIP	100PF	5%	50V	
C113	1-164-161-11	CERAMIC CHIP	0.0022uF	10%	100V	
C201	1-126-157-11	ELECT	10uF	20%	16V	
C202	1-163-213-00	CERAMIC CHIP	0.0022uF	5%	50V	
C203	1-163-201-00	CERAMIC CHIP	680PF	5%	50V	
C204	1-163-102-00	CERAMIC CHIP	24PF	5%	50V	
C205	1-135-177-21	TANTALUM CHIP	1uF	20%	20V	
C206	1-135-180-21	TANTALUM CHIP	3.3uF	20%	6.3V	
C207	1-135-179-21	TANTAL. CHIP	2.2uF	20%	16V	
C208	1-163-986-00	CERAMIC CHIP	0.027uF	10%	25V	
C209	1-124-584-00	ELECT	100uF	20%	10V	
C210	1-163-117-00	CERAMIC CHIP	100PF	5%	50V	
C211	1-163-117-00	CERAMIC CHIP	100PF	5%	50V	
C213	1-164-161-11	CERAMIC CHIP	0.0022uF	10%	100V	
C301	1-163-095-00	CERAMIC CHIP	12PF	5%	50V	

MAIN

Ref. No.	Part No.	Description		Remark	
C302	1-163-095-00	CERAMIC CHIP	12PF	5%	50V
C303	1-163-105-00	CERAMIC CHIP	33PF	5%	50V
C304	1-163-809-11	CERAMIC CHIP	0.047uF	10%	25V
C305	1-162-638-11	CERAMIC CHIP	1uF		16V
C306	1-124-229-00	ELECT	33uF	20%	10V
C307	1-124-229-00	ELECT	33uF	20%	10V
C308	1-124-584-00	ELECT	100uF	20%	10V
C309	1-163-009-11	CERAMIC CHIP	0.001uF	10%	50V
C310	1-124-584-00	ELECT	100uF	20%	10V
C311	1-163-038-00	CERAMIC CHIP	0.1uF		25V
C312	1-163-141-00	CERAMIC CHIP	0.001uF	5%	50V
C313	1-124-431-00	ELECT	33uF	20%	4V
C314	1-126-153-11	ELECT	22uF	20%	6.3V
C315	1-126-163-11	ELECT	4.7uF	20%	50V
C316	1-124-464-11	ELECT	0.22uF	20%	50V
C317	1-163-038-00	CERAMIC CHIP	0.1uF		25V
C318	1-126-163-11	ELECT	4.7uF	20%	50V
C319	1-163-038-00	CERAMIC CHIP	0.1uF		25V
C320	1-124-464-11	ELECT	0.22uF	20%	50V
C321	1-126-153-11	ELECT	22uF	20%	6.3V
C322	1-163-141-00	CERAMIC CHIP	0.001uF	5%	50V
C330	1-163-009-11	CERAMIC CHIP	0.001uF	10%	50V
C340	1-164-232-11	CERAMIC CHIP	0.01uF		50V
C401	1-164-232-11	CERAMIC CHIP	0.01uF		50V
C402	1-164-232-11	CERAMIC CHIP	0.01uF		50V
C403	1-126-357-11	ELECT	150uF	20%	16V
C406	1-124-584-00	ELECT	100uF	20%	10V
C411	1-126-157-11	ELECT	10uF	20%	16V
C412	1-126-163-11	ELECT	4.7uF	20%	50V
C414	1-126-157-11	ELECT	10uF	20%	16V
C430	1-135-179-21	TANTAL. CHIP	2.2uF	20%	16V
C450	1-124-257-00	ELECT	2.2uF	20%	50V
C501	1-163-038-00	CERAMIC CHIP	0.1uF		25V
C502	1-163-037-11	CERAMIC CHIP	0.022uF	10%	25V
C503	1-124-431-00	ELECT	33uF	20%	4V
C505	1-163-078-11	CERAMIC CHIP	0.033uF	10%	25V
C506	1-164-232-11	CERAMIC CHIP	0.01uF		50V
C507	1-135-070-00	TANTALUM CHIP	0.1uF	10%	35V
C508	1-163-038-00	CERAMIC CHIP	0.1uF		25V
C509	1-124-431-00	ELECT	33uF	20%	4V
C510	1-163-038-00	CERAMIC CHIP	0.1uF		25V
C511	1-164-232-11	CERAMIC CHIP	0.01uF		50V
C512	1-124-584-00	ELECT	100uF	20%	10V
C513	1-124-431-00	ELECT	33uF	20%	4V
C514	1-163-095-00	CERAMIC CHIP	12PF	5%	50V
C515	1-163-117-00	CERAMIC CHIP	100PF	5%	50V
C516	1-162-637-11	CERAMIC CHIP	0.47uF		16V
C517	1-163-038-00	CERAMIC CHIP	0.1uF		25V
C518	1-164-232-11	CERAMIC CHIP	0.01uF		50V
C520	1-164-004-11	CERAMIC CHIP	0.1uF	10%	25V
C521	1-163-117-00	CERAMIC CHIP	100PF	5%	50V
C522	1-124-239-00	ELECT	6.9uF	20%	10V
C523	1-124-239-00	ELECT	6.9uF	20%	10V
C524	1-126-153-11	ELECT	22uF	20%	6.3V
C525	1-163-038-00	CERAMIC CHIP	0.1uF		25V
C526	1-163-117-00	CERAMIC CHIP	100PF	5%	50V
C527	1-163-081-00	CERAMIC CHIP	0.22uF		25V
C528	1-126-153-11	ELECT	22uF	20%	6.3V
C529	1-163-125-00	CERAMIC CHIP	220PF	5%	50V
C531	1-163-038-00	CERAMIC CHIP	0.1uF		25V
C532	1-163-038-00	CERAMIC CHIP	0.1uF		25V
C533	1-162-638-11	CERAMIC CHIP	1uF		16V
C534	1-163-038-00	CERAMIC CHIP	0.1uF		25V
C535	1-163-009-11	CERAMIC CHIP	0.001uF	10%	50V
C536	1-163-078-11	CERAMIC CHIP	0.033uF	10%	25V
C537	1-135-145-11	TANTALUM CHIP	0.47uF	10%	35V
C538	1-124-434-00	ELECT	220uF	20%	4V
C539	1-163-009-11	CERAMIC CHIP	0.001uF	10%	50V
C540	1-162-637-11	CERAMIC CHIP	0.47uF		16V
C543	1-135-148-21	TANTAL. CHIP	1.5uF	10%	16V
C544	1-135-159-21	TANTALUM CHIP	10uF	10%	20V
C546	1-163-986-00	CERAMIC CHIP	0.027uF	10%	25V
C547	1-162-638-11	CERAMIC CHIP	1uF		16V
C548	1-126-162-11	ELECT	3.3uF	20%	50V
C549	1-126-157-11	ELECT	10uF	20%	16V
C550	1-163-205-00	CERAMIC CHIP	0.001uF	5%	50V
C551	1-135-159-21	TANTALUM CHIP	10uF	10%	20V
C552	1-135-177-21	TANTALUM CHIP	1uF	20%	20V
C553	1-162-638-11	CERAMIC CHIP	1uF		16V
C554	1-162-637-11	CERAMIC CHIP	0.47uF		16V
C555	1-163-081-00	CERAMIC CHIP	0.22uF		25V
C556	1-163-010-11	CERAMIC CHIP	0.0012uF	10%	50V
C557	1-163-017-00	CERAMIC CHIP	0.0047uF	5%	50V
C558	1-163-038-00	CERAMIC CHIP	0.1uF		25V
C559	1-124-584-00	ELECT	100uF	20%	10V
C560	1-162-637-11	CERAMIC CHIP	0.47uF		16V
C561	1-163-038-00	CERAMIC CHIP	0.1uF		25V
C562	1-162-638-11	CERAMIC CHIP	1uF		16V
C601	1-163-038-00	CERAMIC CHIP	0.1uF		25V
C604	1-163-038-00	CERAMIC CHIP	0.1uF		25V
C605	1-162-638-11	CERAMIC CHIP	1uF		16V
C606	1-163-117-00	CERAMIC CHIP	100PF	5%	50V
C607	1-163-037-11	CERAMIC CHIP	0.022uF	10%	25V
C608	1-163-117-00	CERAMIC CHIP	100PF	5%	50V
C609	1-163-117-00	CERAMIC CHIP	100PF	5%	50V
C801	1-163-141-00	CERAMIC CHIP	0.001uF	5%	50V
C802	1-163-038-00	CERAMIC CHIP	0.1uF		25V
C803	1-124-257-00	ELECT	2.2uF	20%	50V

MAIN

Ref. No.	Part No.	Description			Remark
C804	1-135-179-21	TANTAL. CHIP	2.2uF	20%	16V
C807	1-164-005-11	CERAMIC CHIP	0.47uF		25V
C808	1-162-638-11	CERAMIC CHIP	1uF		16V
C809	1-124-257-00	ELECT	2.2uF	20%	50V
C810	1-162-638-11	CERAMIC CHIP	1uF		16V
C811	1-163-038-00	CERAMIC CHIP	0.1uF		25V
C812	1-164-222-11	CERAMIC CHIP	0.22uF		25V
C813	1-163-809-11	CERAMIC CHIP	0.047uF	10%	25V
C815	1-163-141-00	CERAMIC CHIP	0.001uF	5%	50V
C901	1-135-179-21	TANTAL. CHIP	2.2uF	20%	16V
C902	1-135-179-21	TANTAL. CHIP	2.2uF	20%	16V
		< CONNECTOR >			
CN501	1-566-976-11	SOCKET, CONNECTOR 12P			
CN502	1-565-309-11	CONNECTOR, FLEXIBLE 4P			
CN801	1-563-589-11	CONNECTOR, FLEXIBLE 12P			
CNJ401	1-580-428-11	JACK, DC (DC IN 9V)			
		< DIODE >			
D401	8-719-200-36	DIODE	E10QS04		
D402	8-719-106-22	DIODE	RD7.5M-B1		
D409	8-719-938-75	DIODE	SB05-05CP		
D501	8-719-938-72	DIODE	SB01-05CP		
D502	8-719-938-72	DIODE	SB01-05CP		
D503	8-719-938-72	DIODE	SB01-05CP		
D504	8-719-106-61	DIODE	RD11M-B1		
D505	8-719-400-18	DIODE	MA152WK		
D601	8-719-400-18	DIODE	MA152WK		
D801	8-719-951-22	DIODE	1MN10		
D803	8-719-951-22	DIODE	1MN10		
D804	8-719-400-18	DIODE	MA152WK		
D805	8-719-106-71	DIODE	RD12M-B2		
D806	8-719-938-72	DIODE	SB01-05CP		
D807	8-719-400-18	DIODE	MA152WK		
D909	8-719-105-91	DIODE	RD5.6M-B2		
D910	8-719-938-72	DIODE	SB01-05CP		
		< IC >			
IC301	8-759-501-31	IC	SM5840CS		
IC302	8-759-148-30	IC	uPD6376GS		
IC303	8-759-710-55	IC	NJM2100M		
IC304	8-759-991-27	IC	BA3570F		
IC501	8-752-033-55	IC	CXA1271Q		
IC502	8-752-058-05	IC	CXA1602Q		
IC503	8-759-970-89	IC	BA10358F		
IC504	8-759-030-17	IC	MPC1715FU		
IC505	8-759-031-84	IC	SC7S04F		

Ref. No.	Part No.	Description			Remark
IC601	8-752-341-93	IC	CXD1167Q		
IC801	8-752-832-27	IC	CXP5084-643Q		
IC802	8-759-981-65	IC	LM2903M		
IC803	8-759-031-84	IC	SC7S04F		
		< JACK >			
J301	1-569-240-11	JACK 1P (LINE OUT)			
J302	1-569-240-31	JACK 1P (REMOTE)			
J801	1-569-240-21	JACK 1P (PHONES)			
		< JUMPER >			
JW101	1-216-295-00	METAL CHIP	0	5%	1/10W
JW102	1-216-295-00	METAL CHIP	0	5%	1/10W
JW201	1-216-295-00	METAL CHIP	0	5%	1/10W
JW202	1-216-295-00	METAL CHIP	0	5%	1/10W
JW301	1-216-295-00	METAL CHIP	0	5%	1/10W
JW302	1-216-295-00	METAL CHIP	0	5%	1/10W
JW501	1-216-295-00	METAL CHIP	0	5%	1/10W
JW502	1-216-296-00	METAL CHIP	0	5%	1/8W
JW801	1-216-296-00	METAL CHIP	0	5%	1/8W
		< COIL >			
L402	1-412-032-11	INDUCTOR CHIP	100uH		
L403	1-412-031-11	INDUCTOR CHIP	47uH		
L501	1-412-029-11	INDUCTOR CHIP	10uH		
L502	1-412-039-51	INDUCTOR CHIP	100uH		
L503	1-412-032-11	INDUCTOR CHIP	100uH		
L504	1-412-032-11	INDUCTOR CHIP	100uH		
L505	1-412-039-51	INDUCTOR CHIP	100uH		
L506	1-412-029-11	INDUCTOR CHIP	10uH		
		< LIQUID CRYSTAL DISPLAY >			
LCD1	1-809-508-11	DISPLAY PANEL, LIQUID CRYSTAL			
		< PHOTO COUPLER >			
PC901	1-519-698-11	CDS CELL			
		< PILOT LAMP >			
PL901	1-518-585-11	LAMP, PILOT			
		< TRANSISTOR >			
Q101	8-729-921-72	TRANSISTOR	2SD1781K-R		
Q102	8-729-141-75	TRANSISTOR	2SD596DV345		
Q201	8-729-921-72	TRANSISTOR	2SD1781K-R		
Q202	8-729-141-75	TRANSISTOR	2SD596DV345		
Q409	8-729-216-22	TRANSISTOR	2SA1162-G		
Q410	8-729-141-48	TRANSISTOR	2SB624-BV345		

MAIN

Ref. No.	Part No.	Description		Remark
Q412	8-729-141-75	TRANSISTOR	2SD596DV345	
Q413	8-729-806-75	TRANSISTOR	2SB1120-F	
Q414	8-729-903-10	TRANSISTOR	FMW1	
Q423	8-729-901-04	TRANSISTOR	DTA114EK	
Q424	8-729-903-10	TRANSISTOR	FMW1	
Q425	8-729-900-53	TRANSISTOR	DTC114EK	
Q451	8-729-922-34	TRANSISTOR	2SD1758F5-QR	
Q453	8-729-140-75	TRANSISTOR	2SD999-CLCK	
Q501	8-729-216-22	TRANSISTOR	2SA1162-G	
Q502	8-729-141-75	TRANSISTOR	2SD596DV345	
Q506	8-729-903-29	TRANSISTOR	DTA144TK	
Q507	8-729-903-30	TRANSISTOR	DTC144TK	
Q801	8-729-901-05	TRANSISTOR	DTA124EK	
Q802	8-729-141-75	TRANSISTOR	2SD596DV345	
Q803	8-729-901-04	TRANSISTOR	DTA114EK	
Q805	8-729-900-53	TRANSISTOR	DTC114EK	
Q807	8-729-141-75	TRANSISTOR	2SD596DV345	
Q901	8-729-140-75	TRANSISTOR	2SD999-CLCK	
Q902	8-729-902-99	TRANSISTOR	DTC114TK	
Q903	8-729-806-75	TRANSISTOR	2SB1120-F	
Q904	8-729-901-01	TRANSISTOR	DTC144EK	
Q905	8-729-140-75	TRANSISTOR	2SD999-CLCK	
Q906	8-729-907-28	TRANSISTOR	IMD3	
Q907	8-729-900-53	TRANSISTOR	DTC114EK	
Q908	8-729-901-04	TRANSISTOR	DTA114EK	

< RESISTOR >

Ref. No.	Part No.	Description				Remark
R101	1-216-329-11	METAL GLAZE	5.1K	1%	1/10W	
R102	1-216-338-11	METAL GLAZE	30K	1%	1/10W	
R103	1-216-748-11	METAL CHIP	39K	1%	1/10W	
R104	1-216-773-11	METAL GLAZE	68K	1%	1/10W	
R105	1-216-105-00	METAL CHIP	220K	5%	1/10W	
R106	1-216-089-00	METAL CHIP	47K	5%	1/10W	
R107	1-216-053-00	METAL CHIP	1.5K	5%	1/10W	
R108	1-216-033-00	METAL CHIP	220	5%	1/10W	
R109	1-216-077-00	METAL CHIP	15K	5%	1/10W	
R110	1-216-057-00	METAL CHIP	2.2K	5%	1/10W	
R111	1-216-057-00	METAL CHIP	2.2K	5%	1/10W	
R112	1-216-073-00	METAL CHIP	10K	5%	1/10W	
R113	1-216-009-00	METAL CHIP	22	5%	1/10W	
R122	1-216-073-00	METAL CHIP	10K	5%	1/10W	
R123	1-216-097-00	METAL CHIP	100K	5%	1/10W	
R201	1-216-329-11	METAL GLAZE	5.1K	1%	1/10W	
R202	1-216-338-11	METAL GLAZE	30K	1%	1/10W	
R203	1-216-748-11	METAL CHIP	39K	1%	1/10W	
R204	1-216-773-11	METAL GLAZE	68K	1%	1/10W	
R205	1-216-105-00	METAL CHIP	220K	5%	1/10W	
R206	1-216-089-00	METAL CHIP	47K	5%	1/10W	
R207	1-216-053-00	METAL CHIP	1.5K	5%	1/10W	
R208	1-216-033-00	METAL CHIP	220	5%	1/10W	
R209	1-216-077-00	METAL CHIP	15K	5%	1/10W	
R210	1-216-057-00	METAL CHIP	2.2K	5%	1/10W	
R211	1-216-057-00	METAL CHIP	2.2K	5%	1/10W	
R212	1-216-073-00	METAL CHIP	10K	5%	1/10W	
R213	1-216-009-00	METAL CHIP	22	5%	1/10W	
R222	1-216-073-00	METAL CHIP	10K	5%	1/10W	
R223	1-216-097-00	METAL CHIP	100K	5%	1/10W	
R301	1-216-121-00	METAL CHIP	1M	5%	1/10W	
R302	1-216-001-00	METAL CHIP	10	5%	1/10W	
R303	1-216-077-00	METAL CHIP	15K	5%	1/10W	
R304	1-216-077-00	METAL CHIP	15K	5%	1/10W	
R305	1-216-062-00	METAL CHIP	3.6K	5%	1/10W	
R306	1-216-053-00	METAL CHIP	1.5K	5%	1/10W	
R307	1-216-121-00	METAL CHIP	1M	5%	1/10W	
R308	1-216-298-00	METAL CHIP	2.2	5%	1/10W	
R330	1-216-298-00	METAL CHIP	2.2	5%	1/10W	
R419	1-216-045-00	METAL CHIP	680	5%	1/10W	
R420	1-216-041-00	METAL CHIP	470	5%	1/10W	
R421	1-216-092-00	METAL GLAZE	62K	5%	1/10W	
R422	1-216-071-00	METAL CHIP	8.2K	5%	1/10W	
R423	1-216-045-00	METAL CHIP	680	5%	1/10W	
R424	1-216-081-00	METAL CHIP	22K	5%	1/10W	
R425	1-216-049-00	METAL CHIP	1K	5%	1/10W	
R426	1-216-033-00	METAL CHIP	220	5%	1/10W	
R427	1-216-659-11	METAL CHIP	2.2K	0.5%	1/10W	
R428	1-216-663-11	METAL CHIP	3.3K	0.5%	1/10W	
R429	1-216-697-11	METAL CHIP	82K	0.5%	1/10W	
R430	1-216-663-11	METAL CHIP	3.3K	0.5%	1/10W	
R431	1-216-073-00	METAL CHIP	10K	5%	1/10W	
R436	1-216-025-00	METAL CHIP	100	5%	1/10W	
R437	1-216-686-11	METAL CHIP	30K	0.5%	1/10W	
R438	1-216-053-00	METAL CHIP	1.5K	5%	1/10W	
R439	1-216-694-11	METAL CHIP	62K	0.5%	1/10W	
R440	1-216-049-00	METAL CHIP	1K	5%	1/10W	
R441	1-216-089-00	METAL CHIP	47K	5%	1/10W	
R446	1-216-009-00	METAL CHIP	22	5%	1/10W	
R448	1-216-041-00	METAL CHIP	470	5%	1/10W	
R480	1-216-174-00	METAL GLAZE	100	5%	1/8W	
R481	1-216-174-00	METAL GLAZE	100	5%	1/8W	
R499	1-216-057-00	METAL CHIP	2.2K	5%	1/10W	
R501	1-216-029-00	METAL CHIP	150	5%	1/10W	
R502	1-216-069-00	METAL CHIP	6.8K	5%	1/10W	
R503	1-216-049-00	METAL CHIP	1K	5%	1/10W	
R504	1-216-073-00	METAL CHIP	10K	5%	1/10W	
R505	1-216-105-00	METAL CHIP	220K	5%	1/10W	
R506	1-216-081-00	METAL CHIP	22K	5%	1/10W	

MAIN

Ref. No.	Part No.	Description			Remark
R508	1-216-069-00	METAL CHIP	6.8K	5%	1/10W
R509	1-216-077-00	METAL CHIP	15K	5%	1/10W
R510	1-216-073-00	METAL CHIP	10K	5%	1/10W
R511	1-216-150-00	METAL GLAZE	10	5%	1/8W
R512	1-216-085-00	METAL CHIP	33K	5%	1/10W
R513	1-216-073-00	METAL CHIP	10K	5%	1/10W
R516	1-216-129-00	METAL CHIP	2.2M	5%	1/10W
R517	1-216-093-00	METAL CHIP	68K	5%	1/10W
R518	1-216-097-00	METAL CHIP	100K	5%	1/10W
R519	1-216-119-00	METAL CHIP	820K	5%	1/10W
R520	1-216-748-11	METAL CHIP	39K	1%	1/10W
R521	1-216-095-00	METAL CHIP	82K	5%	1/10W
R522	1-216-081-00	METAL CHIP	22K	5%	1/10W
R523	1-216-059-00	METAL CHIP	2.7K	5%	1/10W
R524	1-216-089-00	METAL CHIP	47K	5%	1/10W
R525	1-216-097-00	METAL CHIP	100K	5%	1/10W
R526	1-216-114-00	METAL GLAZE	510K	5%	1/10W
R528	1-216-077-00	METAL CHIP	15K	5%	1/10W
R529	1-216-686-11	METAL CHIP	30K	0.5%	1/10W
R530	1-216-686-11	METAL CHIP	30K	0.5%	1/10W
R531	1-216-059-00	METAL CHIP	2.7K	5%	1/10W
R532	1-216-103-00	METAL CHIP	180K	5%	1/10W
R533	1-216-062-00	METAL CHIP	3.6K	5%	1/10W
R534	1-216-121-00	METAL CHIP	1M	5%	1/10W
R536	1-216-099-00	METAL CHIP	120K	5%	1/10W
R537	1-216-083-00	METAL CHIP	27K	5%	1/10W
R538	1-216-094-00	METAL GLAZE	75K	5%	1/10W
R539	1-216-094-00	METAL GLAZE	75K	5%	1/10W
R540	1-216-086-00	METAL GLAZE	36K	5%	1/10W
R543	1-216-302-00	METAL CHIP	2.7	5%	1/10W
R544	1-216-226-00	METAL GLAZE	15K	5%	1/8W
R545	1-216-113-00	METAL CHIP	470K	5%	1/10W
R546	1-216-065-00	METAL CHIP	4.7K	5%	1/10W
R547	1-216-057-00	METAL CHIP	2.2K	5%	1/10W
R548	1-216-057-00	METAL CHIP	2.2K	5%	1/10W
R549	1-216-065-00	METAL CHIP	4.7K	5%	1/10W
R550	1-216-049-00	METAL CHIP	1K	5%	1/10W
R551	1-216-049-00	METAL CHIP	1K	5%	1/10W
R552	1-216-081-00	METAL CHIP	22K	5%	1/10W
R553	1-216-049-00	METAL CHIP	1K	5%	1/10W
R554	1-216-033-00	METAL CHIP	220	5%	1/10W
R555	1-216-081-00	METAL CHIP	22K	5%	1/10W
R556	1-216-073-00	METAL CHIP	10K	5%	1/10W
R557	1-216-049-00	METAL CHIP	1K	5%	1/10W
R559	1-216-065-00	METAL CHIP	4.7K	5%	1/10W
R560	1-216-129-00	METAL CHIP	2.2M	5%	1/10W
R561	1-216-065-00	METAL CHIP	4.7K	5%	1/10W
R562	1-216-097-00	METAL CHIP	100K	5%	1/10W
R563	1-216-111-00	METAL CHIP	390K	5%	1/10W
R564	1-216-025-00	METAL CHIP	100	5%	1/10W
R565	1-216-065-00	METAL CHIP	4.7K	5%	1/10W
R566	1-216-049-00	METAL CHIP	1K	5%	1/10W
R601	1-216-097-00	METAL CHIP	100K	5%	1/10W
R602	1-216-089-00	METAL CHIP	47K	5%	1/10W
R801	1-216-089-00	METAL CHIP	47K	5%	1/10W
R802	1-216-238-00	METAL GLAZE	47K	5%	1/8W
R803	1-216-109-00	METAL CHIP	330K	5%	1/10W
R804	1-216-041-00	METAL CHIP	470	5%	1/10W
R806	1-216-089-00	METAL CHIP	47K	5%	1/10W
R807	1-216-073-00	METAL CHIP	10K	5%	1/10W
R808	1-216-053-00	METAL CHIP	1.5K	5%	1/10W
R809	1-216-065-00	METAL CHIP	4.7K	5%	1/10W
R810	1-216-071-00	METAL CHIP	8.2K	5%	1/10W
R811	1-216-077-00	METAL CHIP	15K	5%	1/10W
R812	1-216-077-00	METAL CHIP	15K	5%	1/10W
R813	1-216-077-00	METAL CHIP	15K	5%	1/10W
R818	1-216-073-00	METAL CHIP	10K	5%	1/10W
R820	1-216-298-00	METAL CHIP	2.2	5%	1/10W
R821	1-216-097-00	METAL CHIP	100K	5%	1/10W
R822	1-216-105-00	METAL CHIP	220K	5%	1/10W
R823	1-216-099-00	METAL CHIP	120K	5%	1/10W
R824	1-216-049-00	METAL CHIP	1K	5%	1/10W
R901	1-216-025-00	METAL CHIP	100	5%	1/10W
R902	1-216-049-00	METAL CHIP	1K	5%	1/10W
R903	1-216-033-00	METAL CHIP	220	5%	1/10W
R904	1-216-027-00	METAL CHIP	120	5%	1/10W
R905	1-216-097-00	METAL CHIP	100K	5%	1/10W
R910	1-216-073-00	METAL CHIP	10K	5%	1/10W
R911	1-216-065-00	METAL CHIP	4.7K	5%	1/10W
R912	1-216-099-00	METAL CHIP	120K	5%	1/10W

< VARIABLE RESISTOR >

RV301	1-230-485-11	RES, VAR, CARBON 10K/10K (VOLUME)
RV401	1-238-599-11	RES, ADJ, CARBON 4.7K (AVCC)
RV501	1-238-602-11	RES, ADJ, CARBON 47K (FOCUS GAIN)
RV502	1-238-602-11	RES, ADJ, CARBON 47K (TRACKING GAIN)
RV503	1-238-601-11	RES, ADJ, CARBON 22K (TRACKING BALANCE)
RV504	1-238-602-11	RES, ADJ, CARBON 47K (FOCUS BIAS)
RV505	1-238-597-11	RES, ADJ, CARBON 1K (PLL)

< SWITCH >

S401	1-554-843-11	SWITCH, SLIDE (HOLD/RESUME)
S402	1-570-386-21	SWITCH, SLIDE (BASS BOOST)

< VIBRATOR >

X301	1-567-908-11	VIBRATOR, CRYSTAL (16.9344MHz)
X801	1-578-773-11	VIBRATOR, CERAMIC (3.58MHz)

MAIN

Ref. No.	Part No.	Description	Remark
		MISCELLANEOUS **********	
11	⚠· 8-848-151-11	DEVICE, OPTICAL KSM-220AAN (S)	
56	1-559-876-11	WIRE, FLAT TYPE (20 CORE)	
62	1-452-505-11	MAGNET	
101	⚠· 8-848-151-11	DEVICE, OPTICAL KSM-220AAN (S)	
105	⚠· 8-848-142-11	DEVICE, OPTICAL KSS-220A (RP)	
LCD1	1-809-508-01	DISPLAY PANEL, LIQUID CRYSTAL	
M901	X-2641-521-1	MOTOR ASSY, T.T (SPINDLE)	
M902	X-2641-537-2	MOTOR ASSY, (A) (RP) (SLED)	
S801	1-554-297-31	SWITCH, LEAF (OPEN)	
S901	1-570-112-11	SWITCH, LEAF (LIMIT)	

****

ACCESSORIES & PACKING MATERIALS
****

⚠·	1-465-609-11	ADAPTOR, AC (AC-96N) (US)
⚠·	1-465-665-11	ADAPTOR, AC (AC-96N) (Australian)
⚠·	1-465-667-11	ADAPTOR, AC (AC-96N) (Canadian)
⚠·	1-465-669-11	ADAPTOR, AC (AC-96N) (E)
⚠·	1-465-817-21	ADAPTOR, AC (AC-96NES) (AEP)
⚠·	1-569-007-11	ADAPTOR, CONVERSION 2P (E)
	1-555-658-21	CORD, CONNECTION
	1-559-145-21	CORD (CAR BATTERY) (DCC-50)
	1-575-195-11	CORD, CONNECTION (EXCEPT Canadian)
	1-590-038-21	CORD, CONNECTION (EXCEPT US, Canadian)
⚠·	1-532-740-11	FUSE, GLASS TUBE (1A 125V)
	1-568-928-11	PLUG
	3-754-069-11	MANUAL, INSTRUCTION (ENGLISH, FRENCH, SPANISH) (NORTH EUROPE, AEP, E, Canadian)
	3-754-069-21	MANUAL, INSTRUCTION (ENGLISH) (US, Australian)
	3-754-069-41	MANUAL, INSTRUCTION (DUTCH, SWEDISH, PORTUGUESE) (NORTH EUROPE)
	3-754-069-51	MANUAL, INSTRUCTION (GERMAN, ITALIAN) (AEP)
*	4-947-122-01	CUSHION (UPPER)
*	4-947-123-01	CUSHION (LOWER) (EXCEPT Australian)
*	4-947-124-01	CUSHION (LOWER) (Australian)
*	4-947-126-01	INDIVIDUAL CARTON (US, Canadian)
*	4-947-127-01	INDIVIDUAL CARTON (AEP, E)
*	4-948-105-01	INDIVIDUAL CARTON (Australian)

Note: The components identified by mark ⚠ or dotted line with mark ⚠ are critical for safety. Replace only with part number specified.	**Note:** Les composants identifiés par une marque ⚠ sont critiques pour la sécurité. Ne les remplacer que par une pièce portant le numéro spécifié.

9-956-747-11

Sony Corporation
General Audio Group

English
91J0287-1
Printed in Japan

Published by Customer Relations and Service Group