D-808K

SERVICE MANUAL

US Model
Canadian Model
AEP Model
UK Model
E Model
Australian Model

Model Name Using Similar Mechanism	D-202/202A
CD Mechanism Name	KSM-330ABN

SPECIFICATIONS

System — Compact disc digital audio system
Laser diode properties — Material: GaAlAs
Wavelength: λ = 780 nm
Emission duration: Continuous
Laser output: Less than 44.6 μW
(This output is the value measured at a distance of 200 mm from the objective lens surface on the Optical Pick-up Block.)
Error correction — Sony Super Strategy Cross Interleave Reed Solomon Code
D-A conversion — 1 bit quarz time-axis control
Frequency response — 20 – 20,000 Hz ± 1 dB (measured by EIAJ CP-307)
Output (at 6 V input level) — Line output (stereo minijack)
Output level 0.55 V rms at 50 kilohms
Load impedance over 10 kilohms
Headphones (stereo minijack)
9 mW + 9 mW at 16Ω

General

Power requirements — Supplied:
• DC IN 6 V jack accepts: the Sony AC power adaptor for use on

Where purchased	Operating voltage
European countries	220 V AC, 50 Hz
Canada	120 V AC, 60 Hz
Other countries	100 – 240 V AC, 50/60 Hz

the mount plate for use with 12 V car battery
Not supplied:
• DC 2.4 V Rechargeable battery pack BP-DM1
• DC 3 V two LR6 (size AA) alkaline batteries

Power consumption — 2.5 W DC (while the back light is on)
Dimensions — Approx. 139 × 31.5 × 159.9 mm ($5^1/_2 \times 1^1/_4 \times 6^3/_8$ in.) (w/h/d) incl. projecting parts and controls
Weight — Approx. 315 g (11.1 oz.) not incl. battery

For the Customers in the United Kingdom and European Countries

CLASS 1
LASER PRODUCT
LASER KLASSE 1

This Compact Disc player is classified as a CLASS 1 LASER product.
The CLASS 1 LASER PRODUCT label is located on the bottom exterior.

COMPACT DISC COMPACT PLAYER

SONY®

TABLE OF CONTENTS

Section	Title	Page
	Specifications	1
1. GENERAL		
2. SERVICING NOTES		3
	Notes on Handling the Optical Pick-Up Block or Base Unit	3
	Before Replacing the Optical Block	3
	Note on Laser Diode Emission Check	4
	Laser Diode Check Procedure	4
	Service Mode (service program)	5
3. ELECTRICAL ADJUSTMENTS		6
4. DIAGRAMS		
	4-1. Semiconductor Lead Layouts	11
	4-2. Printed Wiring Boards(Board Suffix – 12)	11
	4-3. Schematic Diagrams	15
	4-4. IC Block Diagrams	19
	4-5. Printed wiring Boards – EXCEPT UK and Aus MODEL – (Board Suffix – 11)	20
5. EXPLODED VIEWS		
	5-1. Cabinet Section-1	23
	5-2. Cabinet Section-2	24
	5-3.Optical Pick-Up Mechanism (KSM-330ABN)	25
6. ELECTRICAL PART LIST		26

SAFETY-RELATED COMPONENT WARNING!!

COMPONENTS IDENTIFIED BY MARK ⚠ OR DOTTED LINE WITH MARK ⚠ ON THE SCHEMATIC DIAGRAMS AND IN THE PARTS LIST ARE CRITICAL TO SAFE OPERATION. REPLACE THESE COMPONENTS WITH SONY PARTS WHOSE PART NUMBERS APPEAR AS SHOWN IN THIS MANUAL OR IN SUPPLEMENTS PUBLISHED BY SONY.

ATTENTION AU COMPOSANT AYANT RAPPORT À LA SÉCURITÉ!

LES COMPOSANTS IDENTIFIÉS PAR UNE MARQUE ⚠ SUR LES DIAGRAMMES SCHÉMATIQUES ET LA LISTE DES PIÈCES SONT CRITIQUES POUR LA SÉCURITÉ DE FONCTIONNEMENT. NE REMPLACER CES COMPOSANTS QUE PAR DES PIÈCES SONY DONT LES NUMÉROS SONT DONNÉS DANS CE MANUEL OU DANS LES SUPPLÉMENTS PUBLIÉS PAR SONY.

SECTION 1
GENERAL

This section is extracted from instruction manual

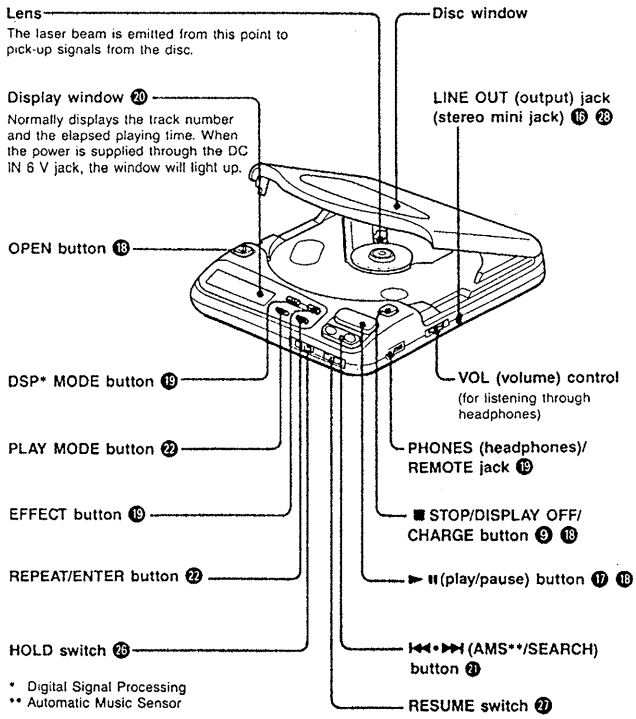

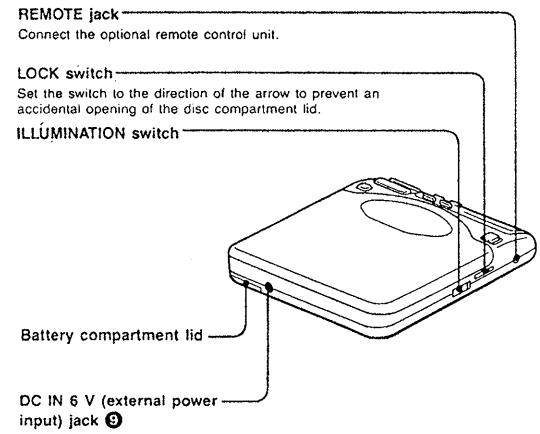

To change the illumination colors
Slide the ILLUMINATION switch to GREEN or AMBER.
When the "BASS BOOST" or "DDS***" indication appears on the display window, DSP MODE button is illuminated with opposite color to the other buttons'.

DSP MODE button	Other buttons
amber	green
green	amber

***Digital Dinamic Sound

SECTION 2
SERVICING NOTES

NOTES ON HANDLING THE OPTICAL PICK-UP BLOCK OR BASE UNIT

The laser diode in the optical pick-up block may suffer electrostatic breakdown because of the potential difference generated by the charged electrostatic load, etc. on clothing and the human body.
During repair, pay attention to electrostatic breakdown and also use the procedure in the printed matter which is included in the repair parts.
The flexible board is easily damaged and should be handled with care.

Before Replacing the Optical Block

Please be sure to check thoroughly the parameters as par the "Optical Block Checking Procedures" (Part No. : 9-960-027-11) issued separately before replacing the optical block.
Note and specifications required to check are given below.

- FOK output : IC801 ㊼ pin
- S carve P-to-P value : 2.5Vp-p
  When checking FOK and S carve P-to-P value, remove the lead wire to disc motor and unsolder and open IC801 ㊼ pin.
- Adjusted part for focus gain adjustment : RV505
- RF signal P-to-P value : 0.85 – 1.35Vp-p
- Traverse signal P-to-P value : 2Vp-p
- The grating holder can not repair.
- Adjusted part for tracking gain adjustment : RV501

Flexible Circuit Board Repairing

- Keep the temperature of the soldering iron around 270℃ during repairing.
- Do not touch the soldering iron on the same conductor of the circuit board (within 3 times).
- Be careful not to apply force on the conductor when soldering or unsoldering.

Notes on chip component replacement

- Never reuse a disconnected chip component.
- Notice that the minus side of a tantalum capacitor may be damaged by heat.

NOTES ON LASER DIODE EMISSION CHECK

The laser beam on this model is concentrated so as to be focused on the disc reflective surface by the objective lens in the optical pick-up block. Therefore, when checking the laser diode emission, observe more than 30cm away from the objective lens.

Laser Diode Check Procedure

The laser diode on this set will not emit unless the top panel is closed and S809 (leaf SW type) is turned on. The laser diode will always emit even if focus search is not performed in service mode.
The laser diode if checked using the current value which flows to the laser diode inside the optical pick-up.

Procedure 1 (service mode or normal operation)

Check the laser diode emission with the eye.

1. Open top panel.
2. S809 on as Fig. 1.
   (In service mode, this operation is not necessary.)
3. Observe the objective lens and confirm that the laser diode goes on about 2.5 seconds due to focus search. If it does not, APC circuit or the optical pick-up is defective.

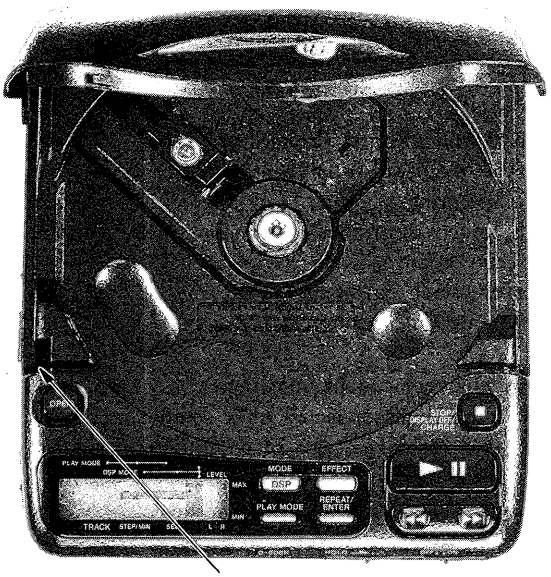

Fig. 1 Turning S809 Connection

Procedure 2 (service mode or normal operation)

Check by the current with flows in the laser diode.

1. Open the top panel.
2. Remove the main board and read the current value on the label affixed to the optical pick-up.

(Label on the flexible board of the optical pick-up)

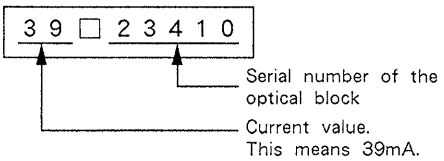

The current value varies with the set.

3. Connect a VOM as shown in Fig. 2.(both side of R510 : 10 Ω)
4. Press the ▶II key.
5. Calculate the current by the VOM reading.
   VOM reading (V) ÷10=current (A)
   ex. VOM reading=0.39V
   0.39÷10=0.039 (A) =39 (mA)
6. Confirm that the ammeter reading is within the range given below.
   value on label$^{+5}_{-11}$ mA (25℃)
   variation relative to temperature : 0.4mA/℃
   (Current increases when temperature rises and decreases when it drops.)
   If the value is more than the range given, diode has deteriorated. If it is less, APC circuit or the optical pick-up is defective.

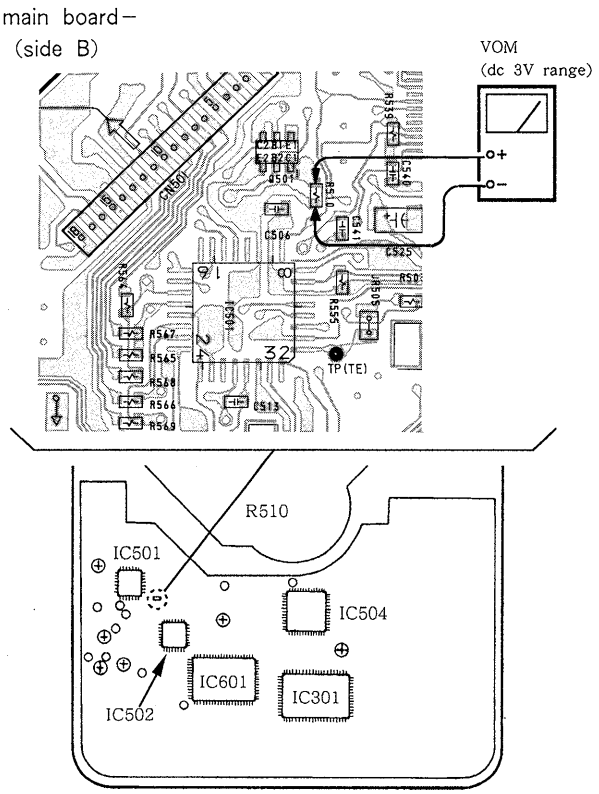

Fig. 2 VOM Connection

SERVICE MODE (service program)

This set has built-in service program in the microcomputer as usual sets.
The operation method of service program is explained below.

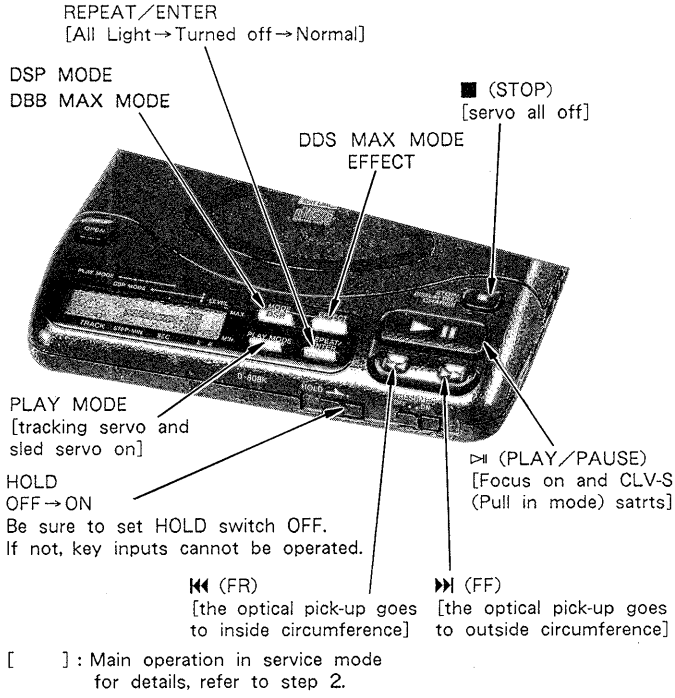

Fig. 3 Key Positions

• Step 1 (Service Mode setting method)

1. Turn the HOLD switch to OFF with the external power supply not plugged in (no power applied to set)
2. Solder to connect the TEST terminal and the OPEN terminal (S809). (IC801 pin㊴ (TEST) pin is grounded.)
3. Connect the external power source.
   After preforming the above proceduress, the set is switched to service mode.

• Step 2 (Service Mode operation)

1. When service mode is set, the display will change 6 times, and those 6 changes will be repeated over and over.
   With this the LCD display should be present in service mode. Even if LCD dose not display, other operations will be perfoemed.
2. When ⏭ or ⏮ key is pressed, the optical pick-up moves to the inside or outside circumference. Tracking servo and sled servo go off when this is done, so press ▷II key to turn on the tracking servo if necessary.
3. When REPEAT/ENTER key is pressed, the display stops.
   When REPEAT/ENTER key is released, the display continues to change.
   This allows check of each segment.
4. When ▷II key is pressed, CLV-S (pull-in mode) starts while performing focus search. When there is no disc installed, focus search is repeated several times while disc motor is rotating.
5. When PLAY MODE key is pressed, tracking servo, sled servo and CLV-A (servo during PLAY) go ON.
6. When performing steps 4 and 5, the set starts to play. There is no muting in the service mode.
7. All servo (focus, tracking, sled and spindle) go off when ■ key is pressed. But disc motor continues rotating for a while by inertia.

• Step 3 (Service Mode release)

1. First be sure to unplug the external power supply, then remove the TEST terminal and the OPEN terminal solder jumper.
2. The set will now operated normally.

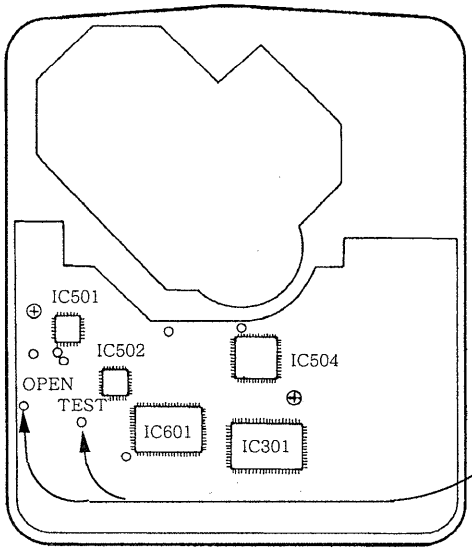

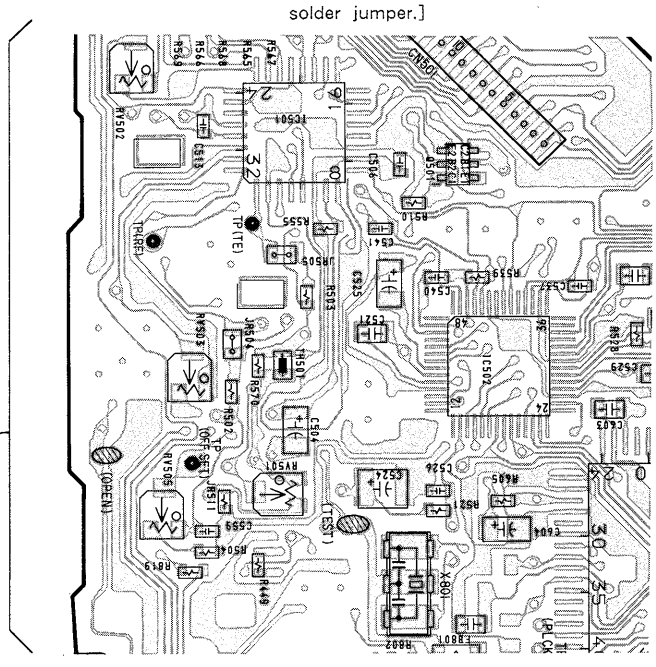

SECTION 3
ELECTRICAL ADJUSTMENTS

Notes on Adjustment

1. Perform adjustments except for RECHARGEABLE VOLTAGE ADJUSTMENT in service mode.
   Be sure to release service mode after completing adjustment.
   (Refer to "Service Mode (service program)" on page 5.)
2. Perform adjustments in the order given.
3. Use YEDS-18 disc (part No. : 3-702-101-01) unless otherwise indicated.
4. Power supply voltage : DC 6V
   HOLD switch : OFF
   VOLUME knob : Minimum

PREPARATION

Put the set into service mode (See page 5.) and perform the following checks. Repair if there are any abnormalities.

• Sled Motor Check

1. Press the OPEN button and open the top panel.
2. Press the ⏭, ⏮ keys and make sure that the optical pick-up moves smoothly, without catching, from the inmost → outmost → inmost circumference.
   ⏭ : The optical pick-up moves outward
   ⏮ : The optical pick-up moves inward

• Focus Search Check

1. Press the OPEN button and open the top panel.
2. Press the ▶II key.
3. Observe the optical pick-up objective lens and check that it moves smoothly up and down with no catching or noises.
4. Press the ■ key.
   Check that focus search operation stops. If it does not, stop press the ■ key again longer than before.

VC (1/2Vcc) Connecting Point

FOCUS BIAS ADJUSTMENT
TRACKING BALANCE ADJUSTMENT

When the adjustments above are performed, connect the ⊖side of oscilloscope to the point below.

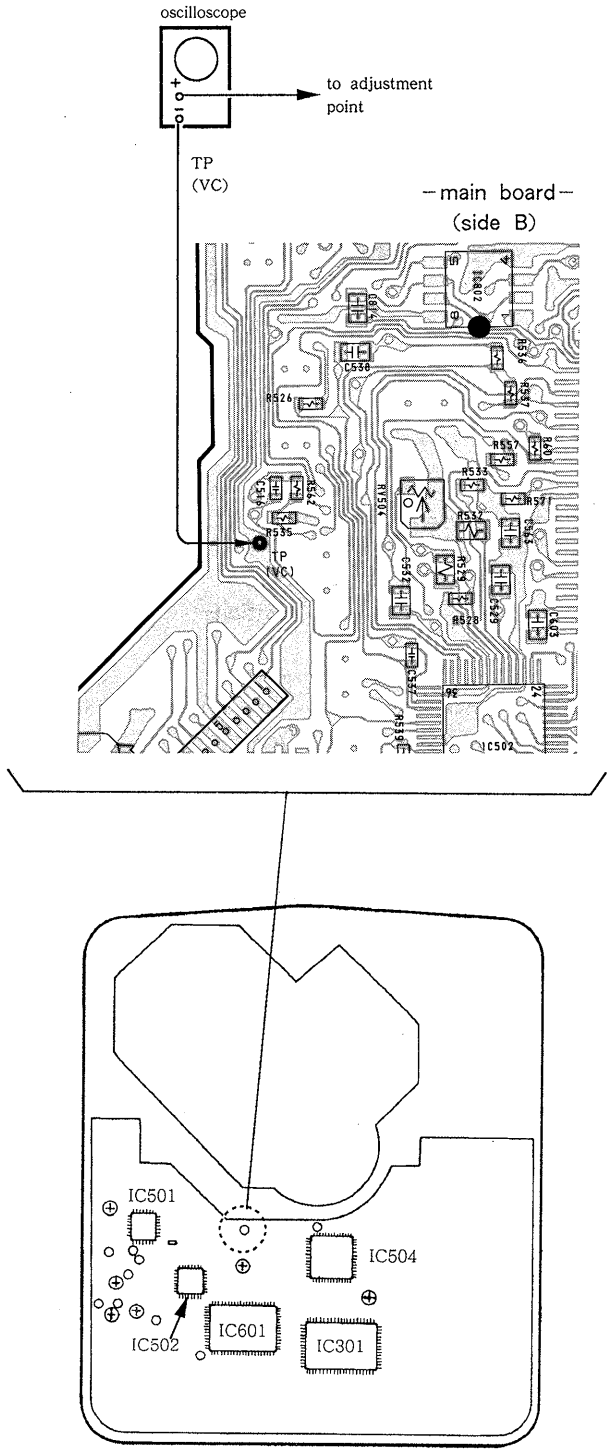

+3.5V Adjustment

* Perform the +3.5V adjustment after applying 2V from the battery terinal.

Adjustment Procedure :

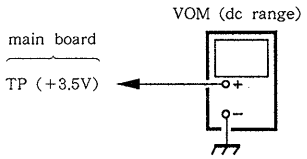

1. Connect the VOM to main board TP (+3.5V)
2. Adjust RV401 for 3.45V−3.50V reading on the VOM.

Adjustment Location : main board (side B)

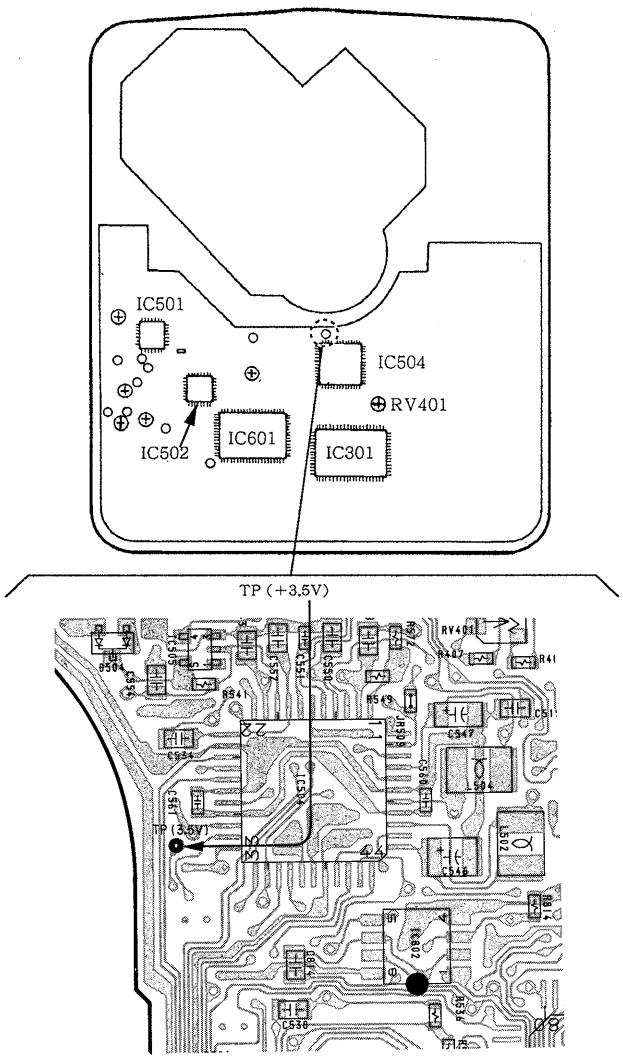

PLL Free Run Frequency Check and Adjustment

Check／Adjustment Procedure :

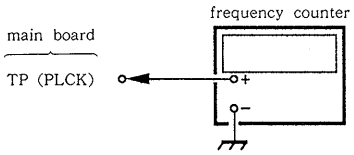

1. Short-circuit the jumper terminal of IC501 ⑦pin (ASY) to GND.
2. Connect a frequency counter to main board test point TP (PLCK).
3. Put the set into service mode stop state (see page 5).
4. Check that the frequency counter reading is 4.300±0.01MHz.
   If not, adjust RV504 so that it is 4.300±0.01MHz.
5. After adjustment, release service mode (see page 5).
6. Short the jumper point disconnected in step 1.

Check／Adjustment Location : main board

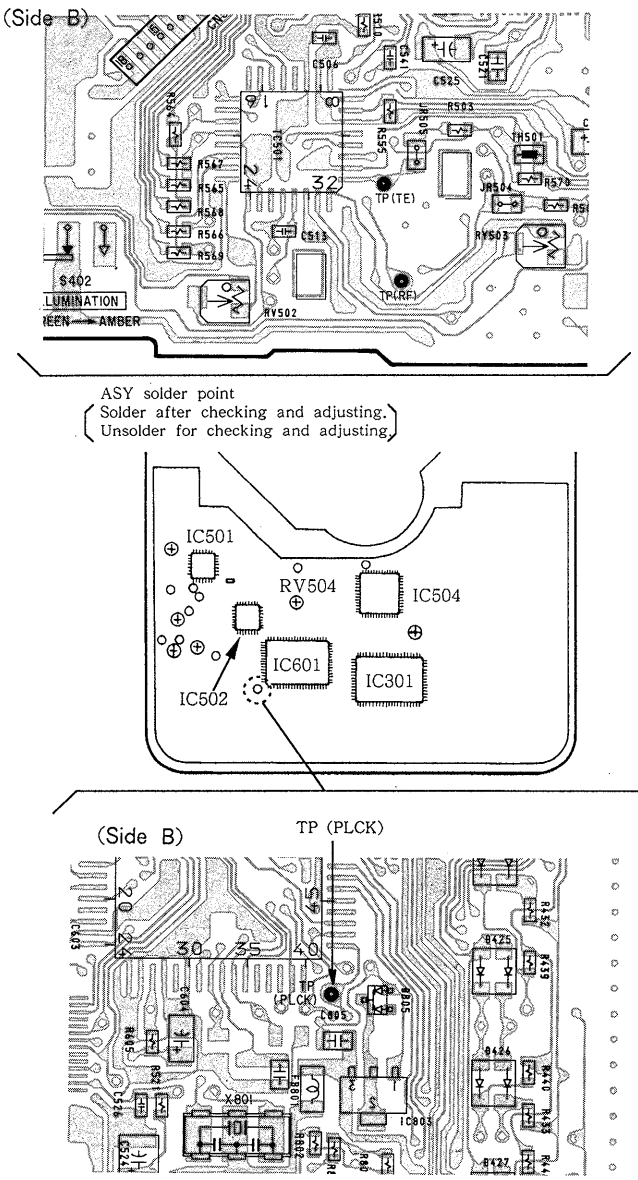

Tracking Balance Adjustment

Conditions :

The set should be placed either horizontally.

Adjustment Procedure :

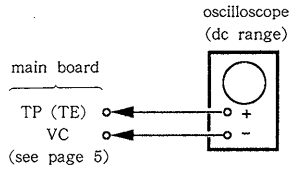

1. Connect the oscilloscope to main board TP (TE).
2. Put the set into service mode stop state (See page 5).
3. Press the ⏭ and ⏮ keys to move the optical pick-up to the center.
4. Insert the disc (YEDS-18) and close the top panel.
5. Press the ▶II key.
   It will go from focus search to focus on, and CLV pull-in mode state. Tracking and sled are OFF.
6. Adjust RV502 so that the oscilloscope waveform is symmetrical on the top and bottom in relation to 0V.

Note :Take sweep time as long as possible to obtain best wave-form.

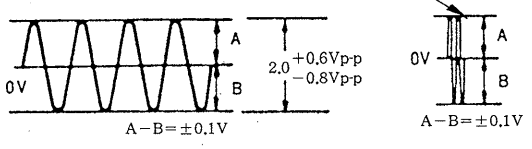

7. Press the ■ key to stop spindle motor from rotaing.
8. After adjustment, release service mode (see page 5).

Adjustment Location : main board (side B)

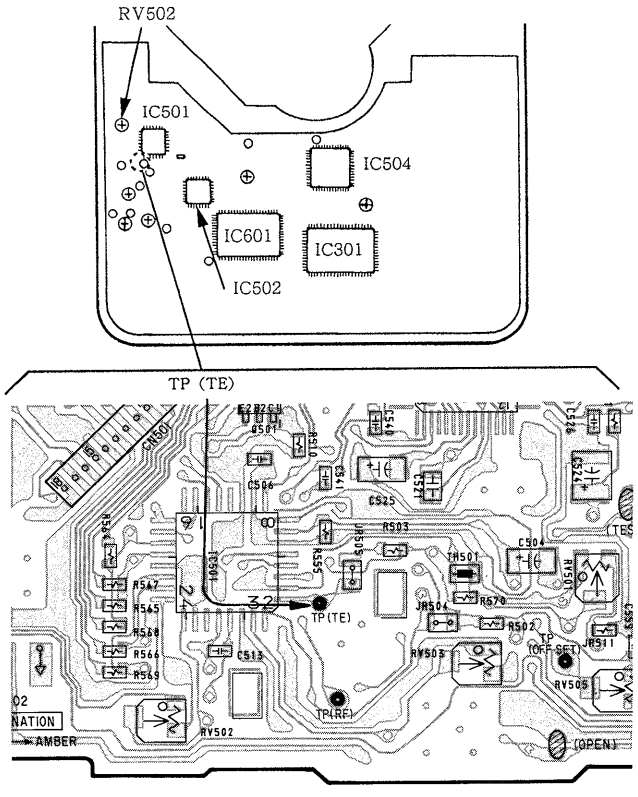

Focus Bias Adjustment

Conditions :

The set should be placed either horizontally.

Adjustment Procedure :

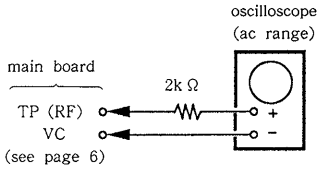

1. Put the set into STOP state in service mode (See page 5).
2. Connect the oscilloscope to main board test point TP (RF).
3. Press the ⏭ and ⏮ key to move the optical pick-up to the center.(Move the optical pick-up to the music area on the disc to enable easy visibility of the eye pattern).
4. Insert the disc (YEDS-18) and close the top panel.
5. Press the ▶II key.
   It will go from focus search to focus on, and CLV pull-in mode state. Tracking and sled are OFF.
6. Press the PLAY MODE key.(Tracking and sled go ON.)
7. Adjust RV503 so that the oscilloscope waveform eye pattern is good. A good eye pattern means that the diamond shape (◇) in the center of the waveform can be clearly distinguished.

• **RF Signal Reference Waveform (eye pattern)**

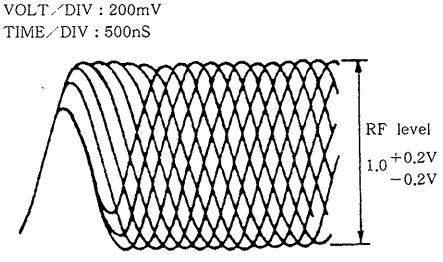

When observing the eye pattern, set the oscilloscope for AC range and raise vertical sensitivity.

8. Press the ■ key to stop spindle from rotating.
9. Measure the voltage of pin㊽TP (OFF SET) of IC502. Readjust RV503 according to the voltage range.
   +70mV − +25mV : → +70mV
   +24mV − −20mV : → −20mV
10. After adjustment, release service mode (see psge 5).

Adjustment Procedure : main board (side B)

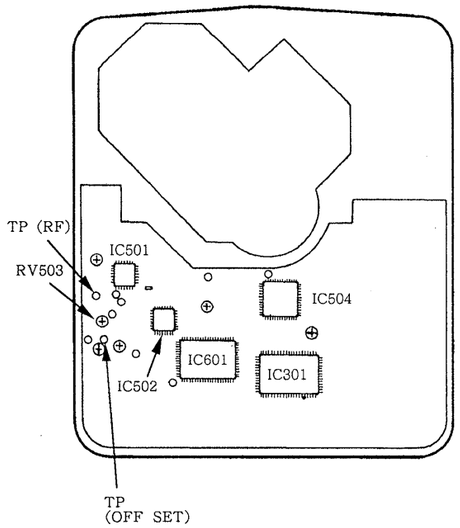

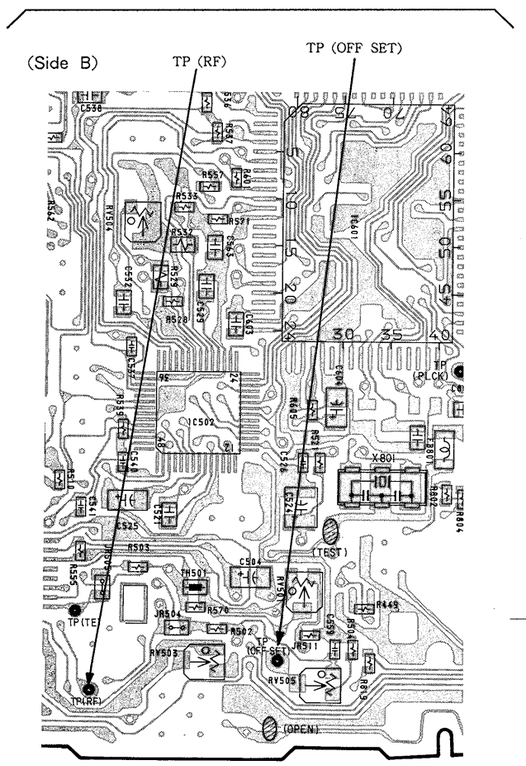

Reference

Focus/Tracking Gain Adjustment

A frequency responce analyzer or CD jig is necessary in order to perform this adjustment exactly.

> However, this gain has a margin, so even if it is slightly off, there is no problem. Therefore, do not perfrom this adjustment.

Focus/tracking gain determines the pick-up followup (vertical and horizontal) relative to mechanical noise and mechanical shock when the 2-axis device operate. However, as these reciprocate, the adjustment is at the point where both are satisfied.

- When gain is high, the noise when the 2-axis device operates increases.
- When gain is low, it is more susceptible to mechanical shock and skipping occurs more easily.

This adjustment is to be performed when replacing the following parts :

- optical pick-up block
- RV501 (tracking gain volume)
- RV505 (focus gain volume)

Be careful not to move RV505 (focus gain volume) and RV501 (tracking gain volume) ordinarily.

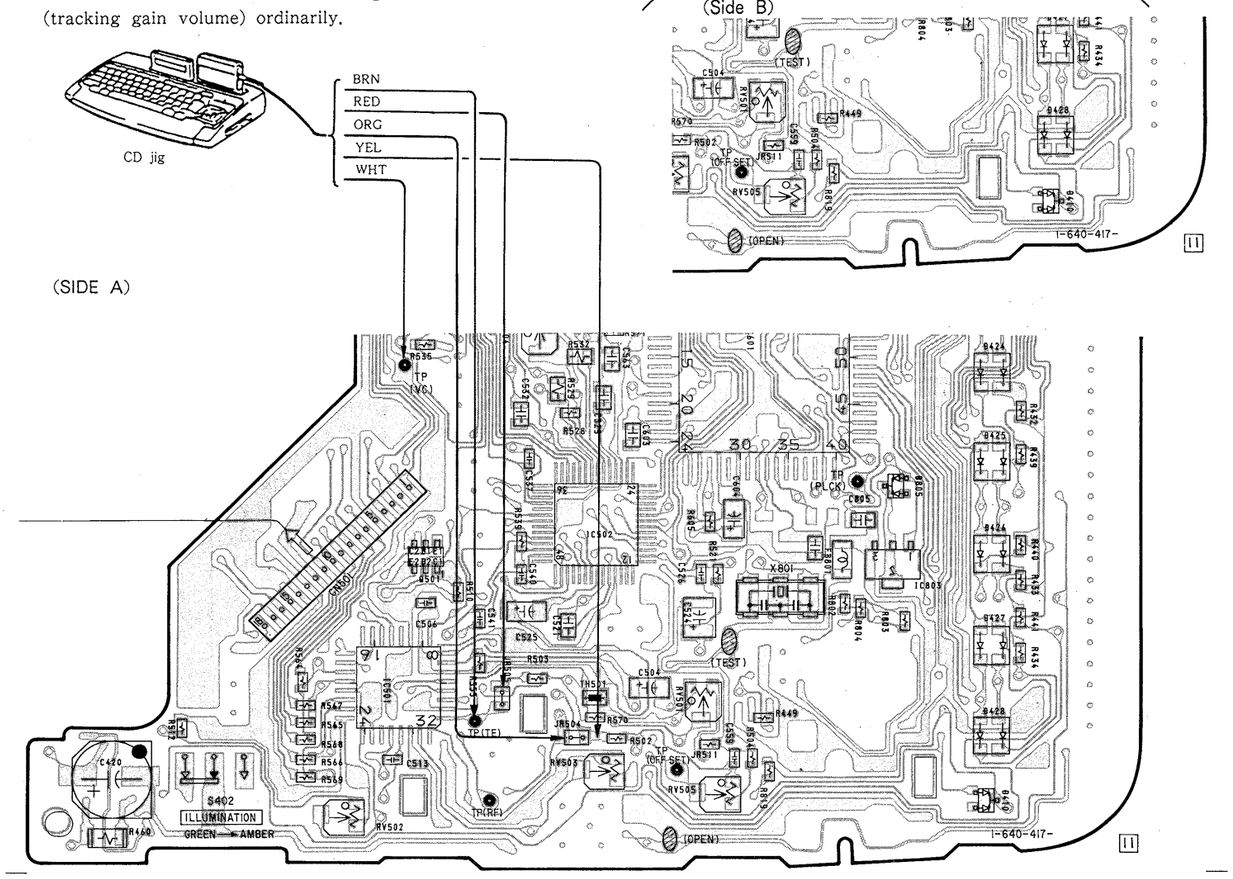

> On this set, it is very difficult to simplify this adjustment. For those sets on which symptoms such as "occasional skipping" are hard to discover, or it is hard to tell if the set has been repaired, use the CD jig and perform this adjustment. Refer to the diagram below for connection of the CD jig. The adjustment procedure is described in the separate CD Jig Instruction Manual.

CD Jig Connection Procedure :

Remove the two jumpers of JR504 and JR505 and connect the cord to the CD jig as shown in the figure below. At this time, connect the cord of the IC501 side to the output terminal for the CD jig and connect the volume side cords to the input terminal from the CD jig.

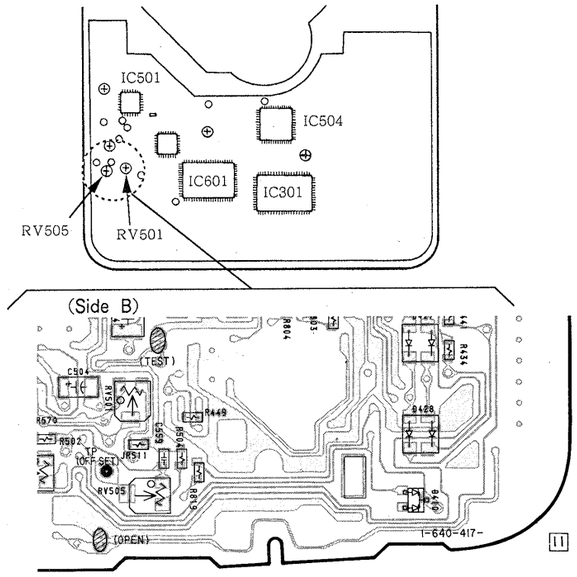

SECTION 4
DIAGRAMS

4-1. SEMICONDUCTOR LEAD LAYOUTS

RH5RC351A

2SD1758F5-QR

MA110
MA729

S-8052ANY-NH

DTA124EU
DTC123EK

MA157

SC7S04F
TC4S30F

FMG4
FMW1

RB411D
RD5.1M-B2
RD5.6M-B2
RD6.2M-B2
SB01-05CP

2SA1162-G
2SA1577-QR
2SB624-BV345
2SB709A-Q
2SB1197K-Q
2SB1295-UL6
2SC2412K-QR
2SD596DV345
2SD1048-X7
2SD1328-RST
2SD1781K-R
2SD1963-Q.R
DTA124EK
DTC114EK
DTC124EK
DTC143XK
DTC143XU
DTC143ZK

XN4608
XN4609

MA151WA

2SB1120
2SB1302

CL-155Y/PG-CD

1. anode
2. anode
3. cathod
4. cathod

MA151WK
SB007W03C

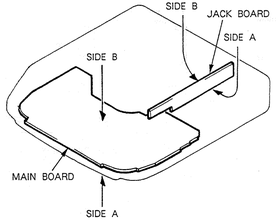

SEGMENT

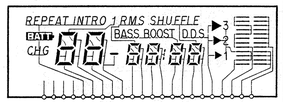

COMMON

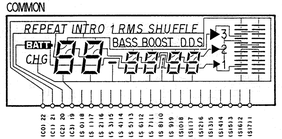

• SEMICONDUCTOR LOCATION

Ref. No.	Location	Ref. No.	Location	Ref. No.	Location
D302	D-8	D805	I-19	Q407	C-7
D303	D-13	D806	E-4	Q408	C-15
D304	B-8	D809	H-3	Q409	D-6
D305	B-8	D810	I-2	Q410	C-6
D306	C-8	D812	C-13	Q411	D-6
D307	C-8	D813	C-13	Q412	G-2
D401	C-7	D899	K-4	Q413	F-2
D402	K-8			Q415	H-2
D403	E-15			Q416	F-2
D404	C-6			Q417	C-4
		IC301	F-18		
D405	C-6	IC302	D-3	Q418	D-4
D406	C-6	IC303	C-3	Q419	D-6
D407	C-6	IC304	C-18	Q420	G-3
D408	K-2	IC305	B-16	Q421	C-5
D409	D-7			Q422	C-12
		IC306	C-18		
D410	K-19	IC401	J-2	Q423	G-10
D411	D-8	IC501	K-15	Q424	G-12
D412	E-14	IC502	I-16	Q425	E-12
D413	C-16	IC504	F-16	Q426	K-8
D414	K-8			Q501	J-15
		IC505	E-15		
D415	B-17	IC601	H-18	Q502	H-6
D416	B-20	IC602	D-18	Q503	H-6
D417	C-19	IC801	I-3	Q504	F-5
D418	C-19	IC802	G-16	Q505	H-6
D419	D-20			Q506	K-5
		IC803	J-18		
D420	E-19	IC804	F-3	Q507	K-7
D421	E-20			Q508	F-5
D422	F-20			Q509	H-5
D423	H-19	Q101	B-17	Q510	K-6
D424	H-19	Q102	B-5	Q511	H-5
		Q201	B-17		
D425	I-19	Q202	B-5	Q801	F-4
D426	J-19	Q301	C-5	Q803	F-4
D427	J-19			Q804	E-17
D428	K-19	Q302	C-5	Q805	H-5
D429	F-19	Q303	C-15	Q806	F-19
		Q304	B-15		
D430	F-12	Q305	B-2	Q807	E-3
D431	D-10	Q306	C-5	Q808	E-4
D501	E-6				
D502	E-6	Q307	B-19		
D503	E-6	Q401	C-14		
		Q402	C-7		
D504	E-15	Q403	D-5		
D801	K-4	Q404	D-16		
D802	H-4				
D803	F-3	Q405	B-6		
D804	K-3	Q406	D-5		

Note :

- ○—: parts extracted from the component side.
- ■ : parts mounted on the conductor side.
- ⊗: Through hole.
- ▒ : Pattern on the side which is seen.
- ▒ : Pattern of the rear side.

4-2. PRINTED WIRING BOARDS (Board Suffix – 12)

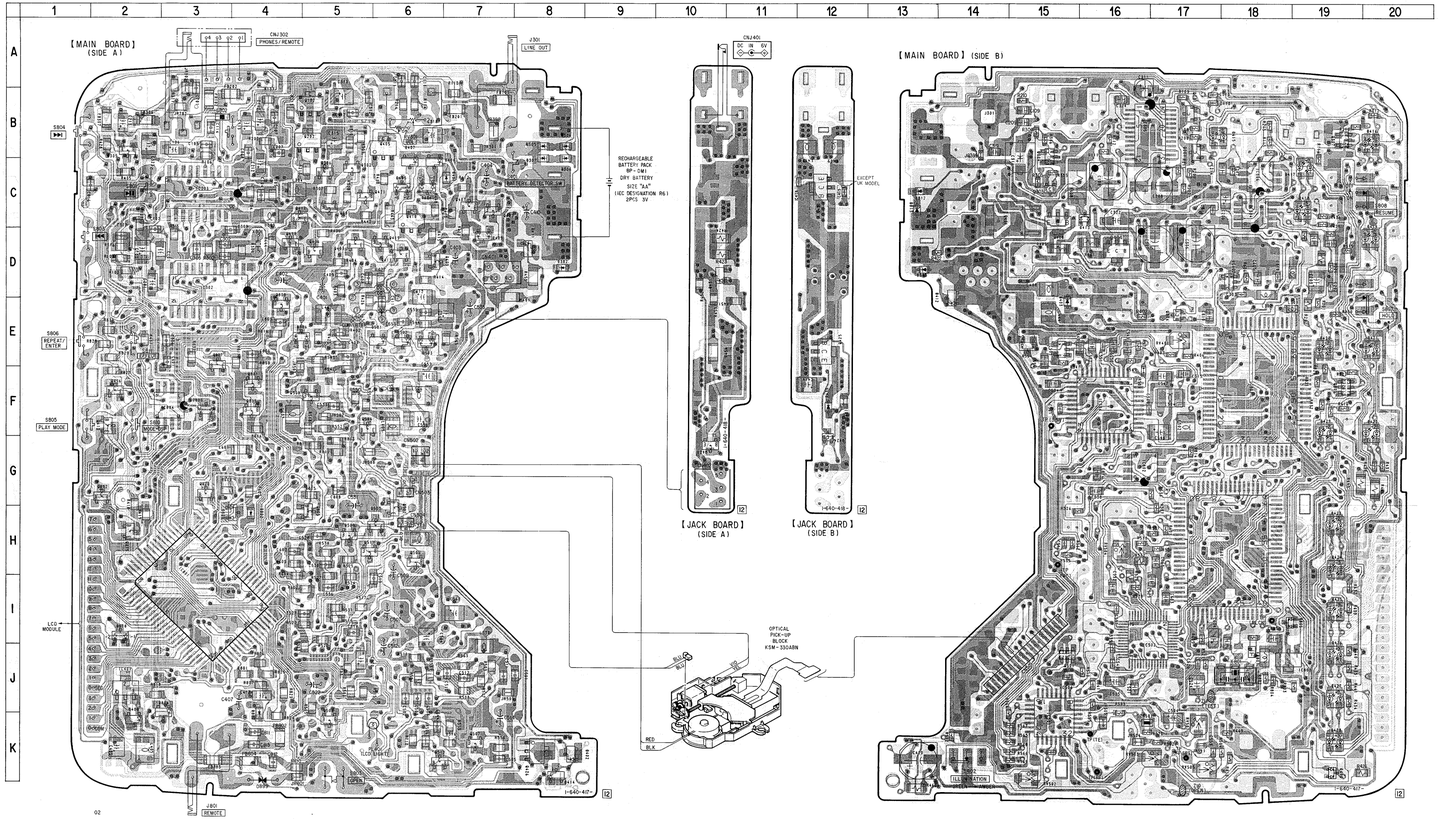

4-3. SCHEMATIC DIAGRAMS

• Refer to page 19 for IC Block Diagrams.

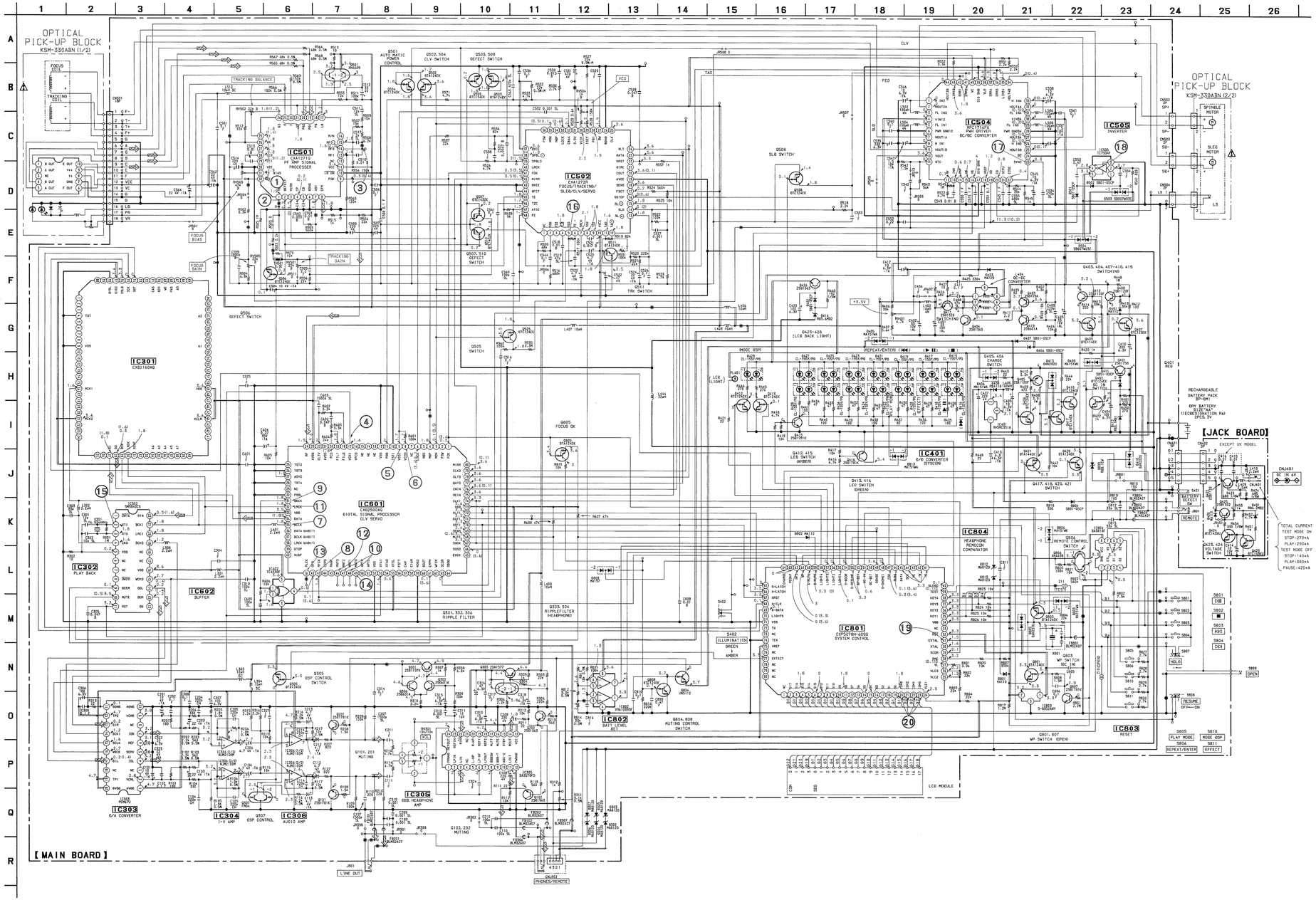

• WAVEFORMS

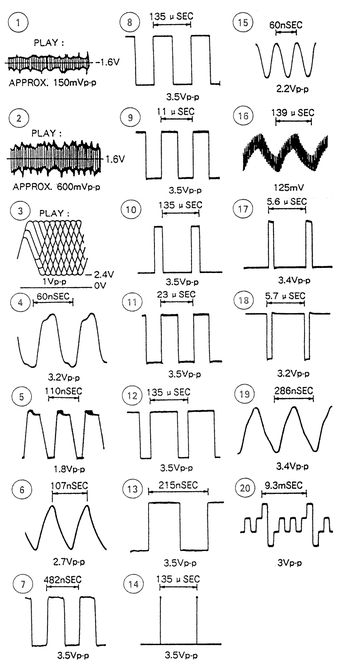

Note :

- All capacitors are in μ F unless otherwise noted. pF : μ μ F 50WV or less are not indicated except for electrolytics and tantalums.
- All resistors are in Ω and ¼W or less unless otherwise specified.
- % : indicates tolerance.
- △ : internal component.

Note: The components identified by mark ⚠ or dotted line with mark ⚠ are critical for safety. Replace only with part number specified.	**Note:** Les composants identifiés par une marque ⚠ sont critiques pour la sécurité. Ne les remplacer que par une pièce portant le numéro spécifié.

- ▬▬ : B+ Line
- ▭ : adjustment for repair.
- Power voltage is dc 6V and fed with regulated dc power supply from external power voltage jack.
- Voltage and waveforms are dc with respect to ground under the service mode.
- no mark : STOP
- ( ) : PLAY
- Voltages are taken with a VOM (input impedance 10M Ω). Voltage variations may be noted due to normal production tolerances.
- Waveforms are taken with a oscilloscope. Voltage variations may be noted due to normal production tolerances.
- Circled numbers refer to waveforms.
- Signal path.
  ⇨ : CD

4-4. IC BLOCK DIAGRAMS

IC302 SM5840CS

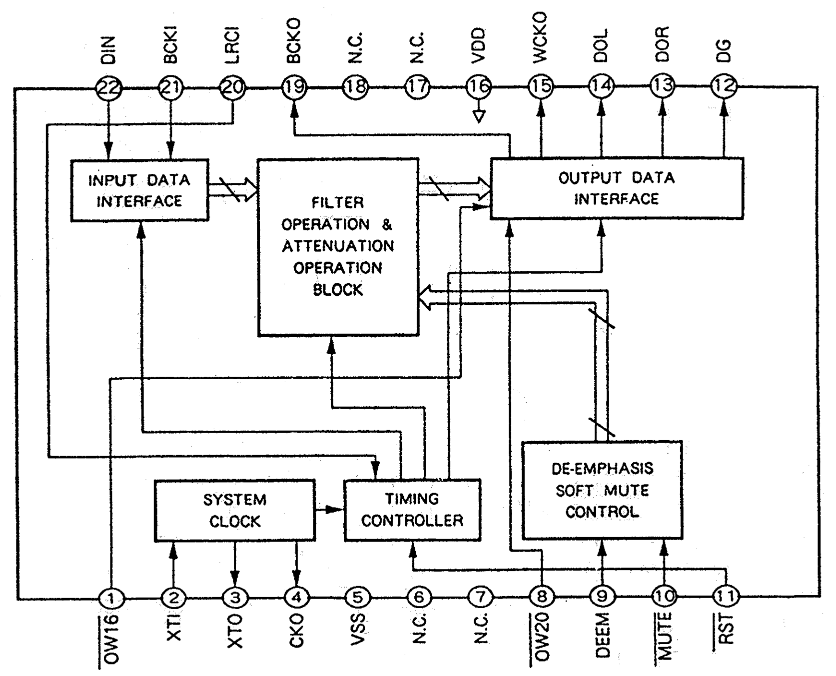

IC305 BA3570FS

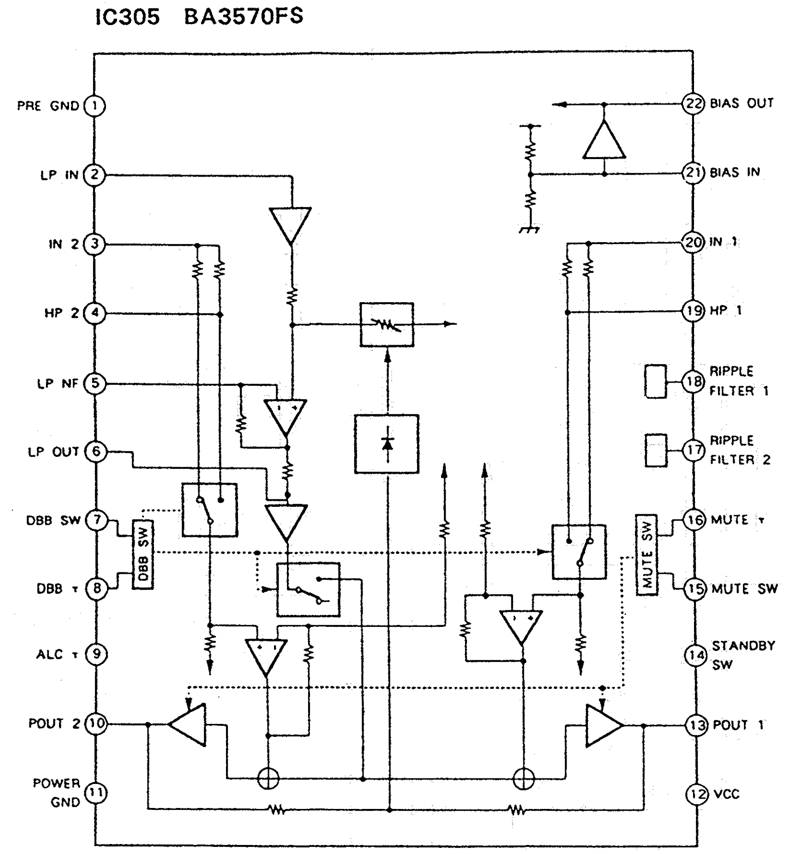

IC501 CXA1271Q

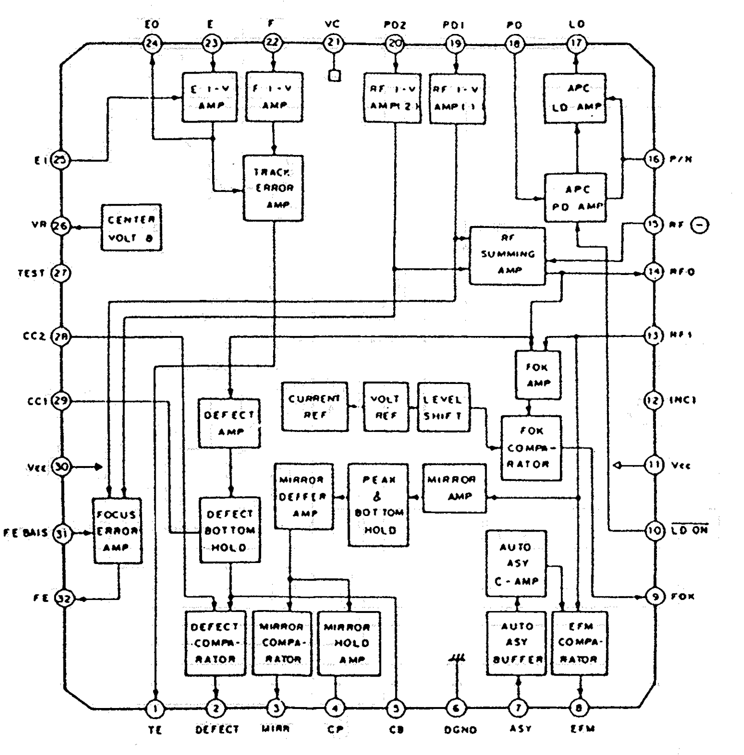

IC502 CXA1272R

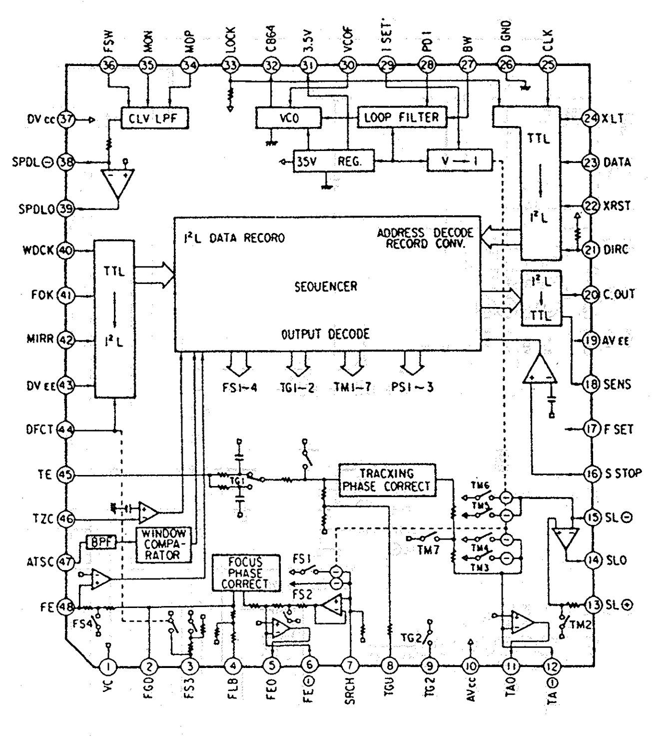

IC601 CXD2500AQ

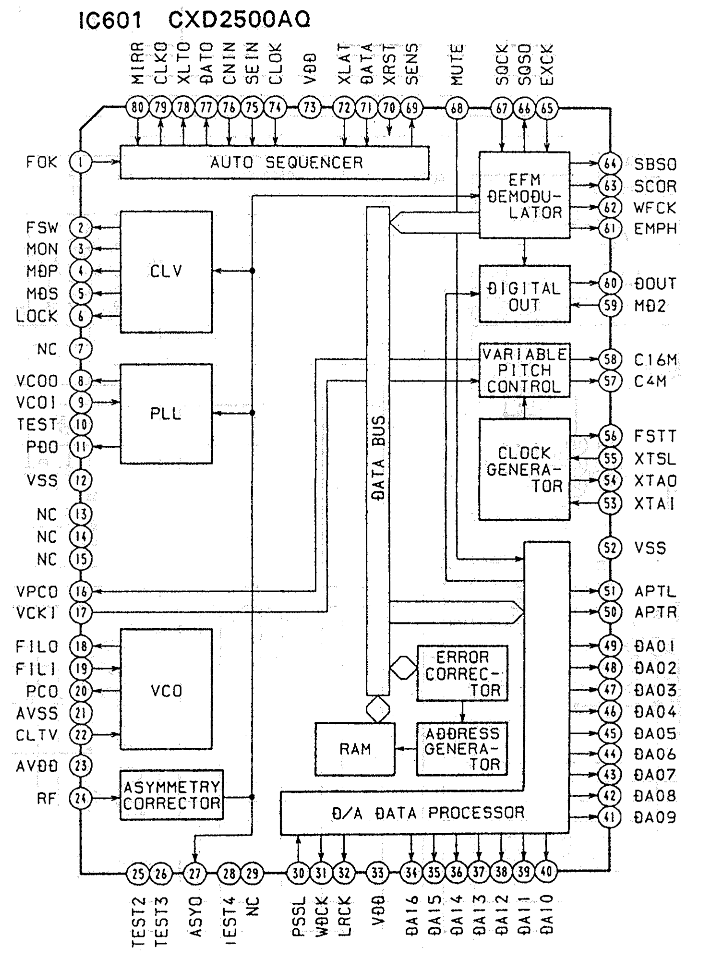

IC804 BA3818F−SY

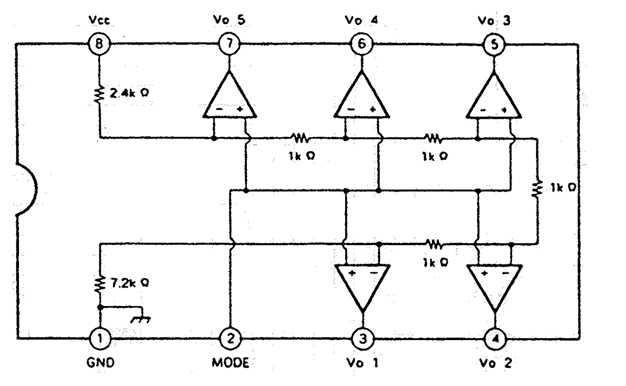

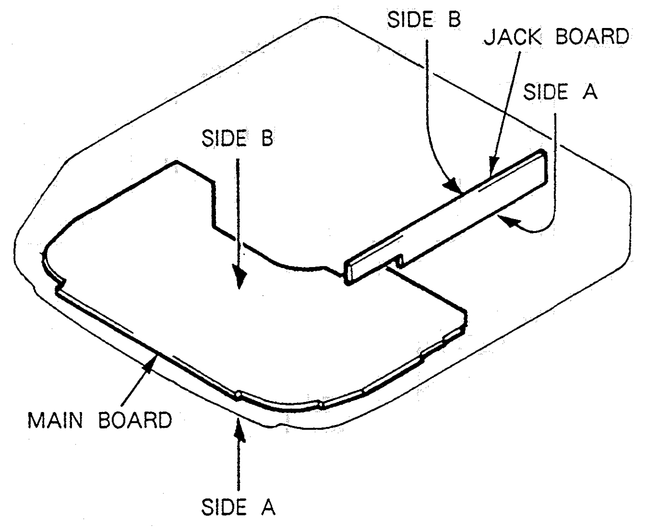

SEGMENT

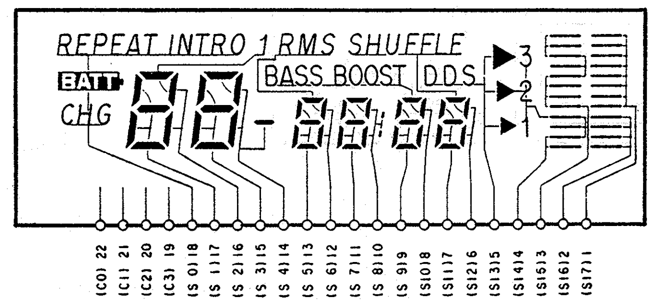

COMMON

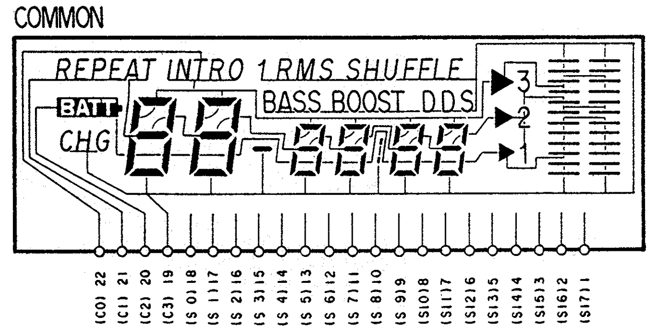

• SEMICONDUCTOR LOCATION

Ref. No.	Location	Ref. No.	Location	Ref. No.	Location
D302	D−8	D805	I−19	Q407	C−7
D303	D−13	D806	E−4	Q408	C−15
D304	B−8	D809	H−3	Q409	D−6
D305	B−8	D810	I−2	Q410	C−6
D306	C−8	D812	C−13	Q411	D−6
D307	C−8	D813	C−13	Q412	G−2
D401	C−7	D899	K−4	Q413	F−2
D402	K−8			Q415	H−2
D403	E−15			Q416	F−2
D404	C−6			Q417	C−4
		IC301	F−18		
D405	C−6	IC302	D−3	Q418	D−4
D406	C−6	IC303	C−3	Q419	D−6
D407	C−6	IC304	C−18	Q420	G−3
D408	K−2	IC305	B−16	Q421	C−5
D409	D−7			Q422	C−12
		IC306	C−18		
D410	K−19	IC401	J−2	Q423	G−10
D411	D−8	IC501	K−15	Q424	G−12
D412	E−14	IC502	I−16	Q425	E−12
D413	C−16	IC504	F−16	Q426	K−8
D414	K−8			Q501	J−15
		IC505	E−15		
D415	B−17	IC601	H−18	Q502	H−6
D416	B−20	IC602	D−18	Q503	H−6
D417	C−19	IC801	I−3	Q504	F−5
D418	C−19	IC802	G−16	Q505	H−6
D419	D−20			Q506	K−5
		IC803	J−18		
D420	E−19	IC804	F−3	Q507	K−7
D421	E−20			Q508	F−5
D422	F−20			Q509	H−5
D423	H−19	Q101	B−17	Q510	K−6
D424	H−19	Q102	B−5	Q511	H−5
		Q201	B−17		
D425	I−19	Q202	B−5	Q801	F−4
D426	J−19	Q301	C−5	Q803	F−4
D427	J−19			Q804	E−17
D428	K−19	Q302	C−5	Q805	H−5
D429	F−19	Q303	C−15	Q806	F−19
		Q304	B−15		
D430	F−12	Q305	B−2	Q807	E−3
D431	D−10	Q306	C−5	Q808	E−4
D501	E−6				
D502	E−6	Q307	B−19		
D503	E−6	Q401	C−14		
		Q402	C−7		
D504	E−15	Q403	D−5		
D801	K−4	Q404	D−16		
D802	H−4				
D803	F−3	Q405	B−6		
D804	K−3	Q406	D−5		

Note :

- ○— : parts extracted from the component side.
- ■ : parts mounted on the conductor side.
- ◇ : Through hole.
- ▨ : Pattern on the side which is seen.
- ░ : Pattern of the rear side.

4-5. PRINTED WIRING BOARDS − EXCEPT UK and Aus MODEL (Board Suffix − 11) −

• Refer to page 11 for Semiconductor Lead Layouts.

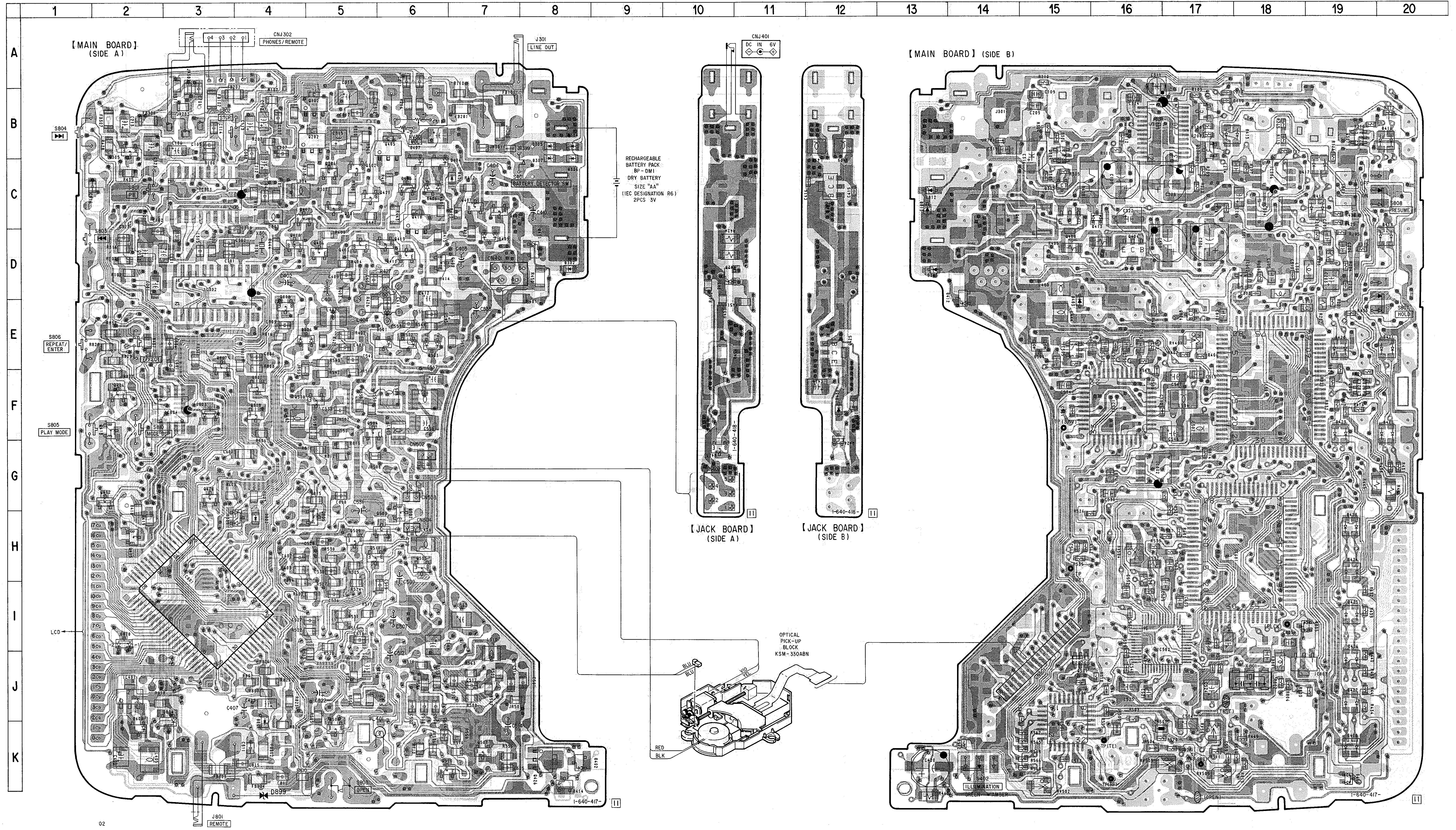

SECTION 5
EXPLODED VIEWS

NOTE:
- -XX, -X mean standardized parts, so they may have some differences from the original one.
- The construction parts of an assembled part are indicated with a collation number in the remark column.
- Color indication of Appearance Parts Example:
  KNOB, BALANCE (WHITE).... (RED)
  ↑ Parts color ↑ Cabinet's color
- Items marked "*" are not stocked since they are seldom required for routine service. Some delay should be anticipated when ordering these items.
- The mechanical parts with no reference number in the exploded views are not supplied.
- Hardware (# mark) list is given in the last of this parts list.

The components identified by mark ⚠ or dotted line with mark ⚠ are critical for safety.
Replace only with part number specified.

Les composants identifiés par une marque ⚠ sont critiques pour la sécurité.
Ne les remplacer que par une pièce portant le numéro spécifié.

5-1. CABINET SECTION-1

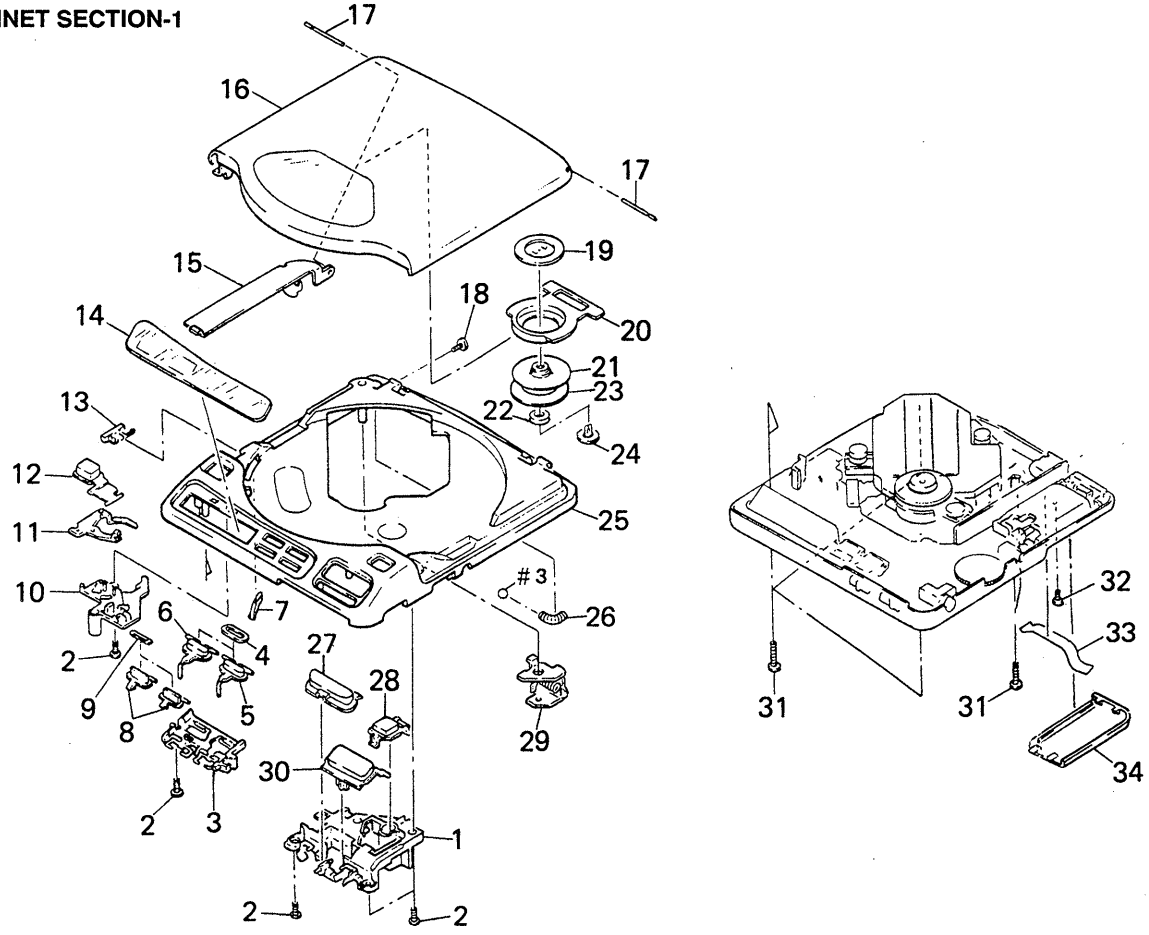

Ref. No.	Part No.	Description	Remark
1	4-946-267-01	BRACKET (FU-R)	
2	3-342-073-01	SCREW (1.7X4), TAPPING	
3	4-946-266-01	BRACKET (FU-L)	
4	4-946-237-01	COVER (EF)	
5	4-946-253-01	BUTTON (EFFECT)	
6	4-946-260-01	BUTTON (DSP)	
7	4-946-246-01	WINDOW (LAMP)	
8	4-946-243-01	BUTTON (P-MODE)	
9	4-946-238-01	COVER (P-M)	
10	4-946-258-01	BRACKET (LOCK)	
11	4-946-256-01	CLAW, LOCK	
12	4-946-255-01	BUTTON (OPEN)	
13	4-938-831-01	KNOB (SAFETY)	
14	X-4941-777-1	WINDOW (LCD) ASSY	
15	4-946-245-01	ARM, SWITCHING	
16	X-4941-776-1	LID SUB ASSY, UPPER	
17	4-931-825-01	SHAFT (FULCRUM)	
18	3-703-816-72	SCREW (M1.4X3.0), SPECIAL HEAD	
19	4-946-250-01	PLATE (M), CHUCK	
20	4-946-248-01	PLATE (HOLD), CHUCK	
21	4-946-251-01	PLATE (P), CHUCK	
22	1-452-505-11	MAGNET	
23	4-926-629-12	SHEET, DISC HOLD	
24	4-946-249-01	HOLDER (MG)	
25	4-946-261-01	CABINET (UPPER)	
26	4-926-633-01	SPRING (BALL), COMPRESSION	
27	4-946-242-01	BUTTON (FRS)	
28	4-946-241-01	BUTTON (STOP)	
29	X-4941-775-1	BRACKET (SWITCHING) ASSY	
30	4-946-240-01	BUTTON (PLAY)	
31	3-336-395-01	SCREW (B2X10) (G), TAPPING	
32	4-945-318-01	SCREW	
33	4-944-367-01	RIBBON, BATTERY	
34	4-946-254-01	LID, BATTERY CASE	

5-2. CABINET SECTION-2

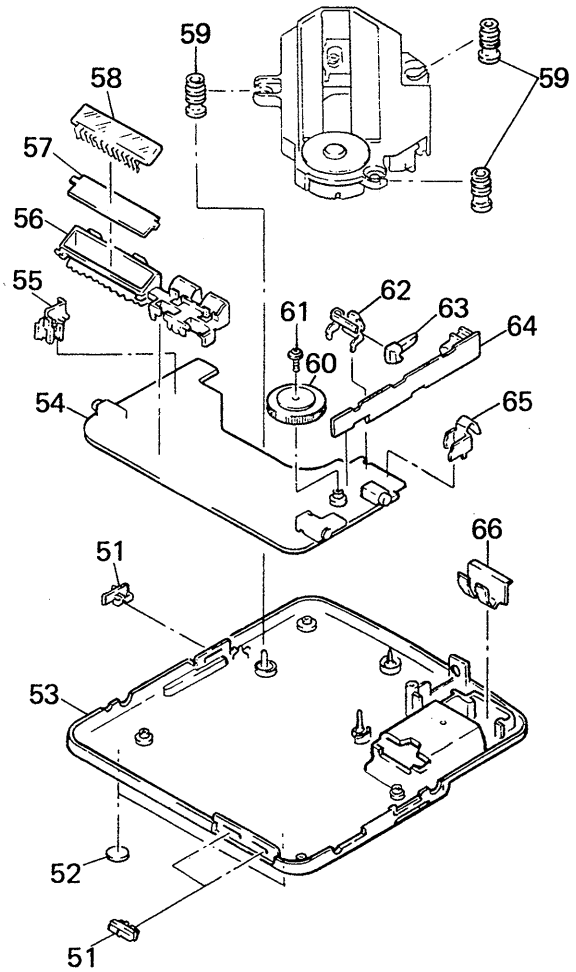

Ref. No.	Part No.	Description	Remark
51	4-946-236-01	KNOB (IHR)	
52	4-912-641-01	FOOT, RUBBER	
53	X-4941-778-1	CABINET (LOWER) SUB ASSY	
54	A-3275-177-A	MAIN BOARD, COMPLETE (US, Canadian, AEP, E, AUS)	
54	A-3275-236-A	MAIN BOARD, COMPLETE (UK)	
* 55	4-946-259-01	HOLDER (LAMP)	
* 56	4-946-257-01	HOLDER (LCD)	
* 57	4-946-247-01	PLATE (LCD), LIGHT GUIDE	
58	1-809-483-11	DISPLAY PANEL, LIQUID CRYSTAL	
59	4-946-230-01	INSULATOR (NEW)	
60	4-938-812-01	KNOB (VOLUME)	
61	3-345-648-01	SCREW (M1.4X3)	
62	4-944-348-01	TERMINAL BOARD (-), BATTERY	
63	4-944-363-01	SEPARATOR	
64	A-3261-826-A	MOUNTED PCB (LEAD), JACK (US, Canadian, AEP, E, AUS)	
64	A-3261-897-A	MOUNTED PCB (LEAD), JACK (UK)	
65	4-944-347-01	TERMINAL BOARD (+), BATTERY	
66	4-944-349-01	TERMINAL BOARD (RELAY), BATTERY	

5-3. OPTICAL PICK-UP MECHANISM (KSM-330ABN)

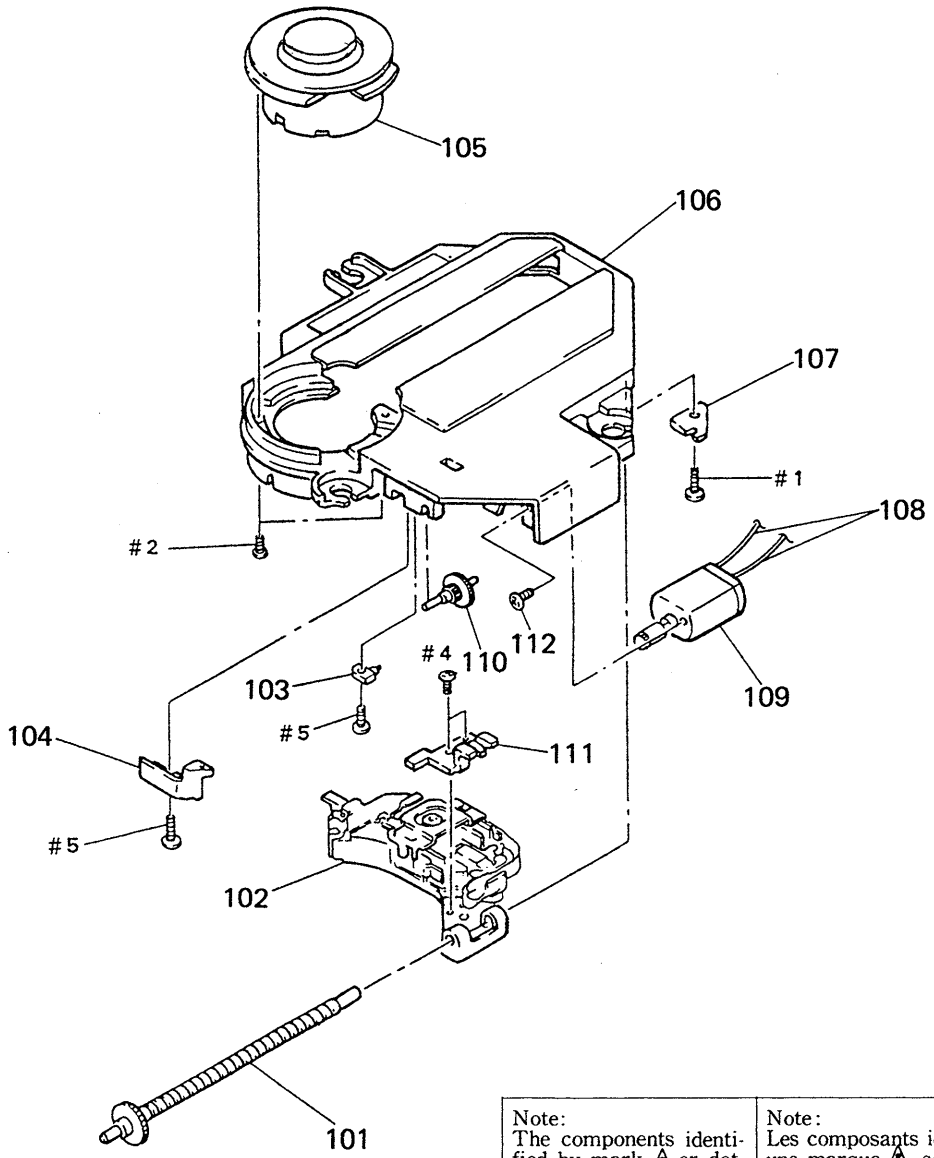

Note:	Note:
The components identified by mark ⚠ or dotted line with mark ⚠ are critical for safety. Replace only with part number specified.	Les composants identifiés par une marque ⚠ sont critiques pour la sécurité. Ne les remplacer que par une pièce portant le numéro spécifié.

Ref. No.	Part No.	Description	Remark
101	X-2625-173-2	SCREW ASSY, SLED	
⚠102	8-848-212-01	DEVICE, OPTICAL KSS-330A	
103	1-570-771-11	SWITCH	
104	2-625-412-02	SPRING, SLED	
105	X-2625-289-1	MOTOR ASSY(S), T.T.	
106	2-625-415-02	CHASSIS, MD	
107	2-625-411-01	RETAINER, SHAFT	
108	1-948-418-21	HARNESS	
109	X-2625-171-2	MOTOR ASSY, SLED	
110	2-625-410-01	GEAR (B)	
111	2-625-414-02	RACK	
112	3-732-988-01	SCREW (M2X2.5)	

SECTION 6
ELECTRICAL PART LIST

MAIN

NOTE:
- Due to standardization, replacements in the parts list may be different from the parts specified in the diagrams or the components used on the set.
- -XX, -X mean standardized parts, so they may have some difference from the original one.
- RESISTORS
  All resistors are in ohms
  METAL: Metal-film resistor
  METAL OXIDE: Metal oxide-film resistor
  F: nonflammable
- Items marked "*" are not stocked since they are seldom required for routine service. Some delay should be anticipated when ordering these items.
- SEMICONDUCTORS
  In each case, u: μ, for example:
  uA....: μA...., uPA....: μPA....
  uPB....: μPB...., uPC....: μPC....
  uPD....: μPD....
- CAPACITORS
  uF: μF
- COILS
  uH: μH

The components identified by mark ⚠ or dotted line with mark ⚠ are critical for safety.
Replace only with part number specified.

Les composants identifiés par une marque ⚠ sont critiques pour la sécurité.
Ne les remplacer que par une pièce portant le numéro spécifié.

When indicating parts by reference number, please include the board.

Ref. No.	Part No.	Description			Remark
	A-3275-177-A	MAIN BOARD, COMPLETE (US, Canadian, AEP, E, AUS) **********			
	A-3275-236-A	MAIN BOARD, COMPLETE (UK) **********			
	3-345-648-01	SCREW (M1.4X3)			
	4-938-812-01	KNOB (VOLUME)			
	4-944-347-01	TERMINAL BOARD (+), BATTERY			
	4-944-348-01	TERMINAL BOARD (-), BATTERY			
	4-944-363-01	SEPARATOR			
*	4-946-247-01	PLATE (LCD), LIGHT GUIDE			
*	4-946-257-01	HOLDER (LCD)			
*	4-946-259-01	HOLDER (LAMP)			
		< CAPACITOR >			
C101	1-135-201-11	TANTALUM CHIP	10uF	20%	4V
C102	1-163-038-00	CERAMIC CHIP	0.1uF		25V
C103	1-135-202-21	TANTAL. CHIP	22uF	20%	4V
C104	1-163-125-00	CERAMIC CHIP	220PF	5%	50V
C105	1-163-125-00	CERAMIC CHIP	220PF	5%	50V
C106	1-135-151-21	TANTALUM CHIP	4.7uF	20%	4V
C107	1-163-145-00	CERAMIC CHIP	0.0015uF	5%	50V
C108	1-126-246-11	ELECT CHIP	220uF	20%	4V
C109	1-163-141-00	CERAMIC CHIP	0.001uF	5%	50V
C110	1-162-953-11	CERAMIC CHIP	100PF	5%	50V
C111	1-164-346-11	CERAMIC CHIP	1uF		16V
C112	1-135-151-21	TANTALUM CHIP	4.7uF	20%	4V
C113	1-135-151-21	TANTALUM CHIP	4.7uF	20%	4V
C114	1-163-125-00	CERAMIC CHIP	220PF	5%	50V
C201	1-135-201-11	TANTALUM CHIP	10uF	20%	4V
C202	1-164-156-11	CERAMIC CHIP	0.1uF		25V
C203	1-135-202-21	TANTAL. CHIP	22uF	20%	4V
C204	1-163-125-00	CERAMIC CHIP	220PF	5%	50V
C205	1-163-125-00	CERAMIC CHIP	220PF	5%	50V
C206	1-135-151-21	TANTALUM CHIP	4.7uF	20%	4V
C207	1-163-145-00	CERAMIC CHIP	0.0015uF	5%	50V
C208	1-126-246-11	ELECT CHIP	220uF	20%	4V
C209	1-163-141-00	CERAMIC CHIP	0.001uF	5%	50V
C210	1-162-953-11	CERAMIC CHIP	100PF	5%	50V
C211	1-164-346-11	CERAMIC CHIP	1uF		16V
C212	1-135-151-21	TANTALUM CHIP	4.7uF	20%	4V
C213	1-135-151-21	TANTALUM CHIP	4.7uF	20%	4V
C214	1-163-125-00	CERAMIC CHIP	220PF	5%	50V
C301	1-163-095-00	CERAMIC CHIP	12PF	5%	50V
C302	1-163-093-00	CERAMIC CHIP	10PF	5%	50V
C303	1-162-947-11	CERAMIC CHIP	33PF	5%	50V
C304	1-164-346-11	CERAMIC CHIP	1uF		16V
C305	1-163-809-11	CERAMIC CHIP	0.047uF	10%	25V
C306	1-126-206-11	ELECT CHIP	100uF	20%	6.3V
C307	1-126-206-11	ELECT CHIP	100uF	20%	6.3V
C308	1-163-038-00	CERAMIC CHIP	0.1uF		25V
C309	1-163-038-00	CERAMIC CHIP	0.1uF		25V
C310	1-162-953-11	CERAMIC CHIP	100PF	5%	50V
C311	1-128-004-11	ELECT CHIP	10uF	20%	16V
C312	1-163-141-00	CERAMIC CHIP	0.001uF	5%	50V
C313	1-135-217-21	TANTALUM CHIP	15uF	20%	6.3V
C314	1-164-156-11	CERAMIC CHIP	0.1uF		25V
C315	1-135-217-21	TANTALUM CHIP	15uF	20%	6.3V
C316	1-126-205-11	ELECT CHIP	47uF	20%	6.3V
C317	1-163-038-00	CERAMIC CHIP	0.1uF		25V
C318	1-135-217-21	TANTALUM CHIP	15uF	20%	6.3V
C319	1-163-141-00	CERAMIC CHIP	0.001uF	5%	50V
C322	1-124-778-00	ELECT CHIP	22uF	20%	6.3V
C323	1-135-202-21	TANTAL. CHIP	22uF	20%	4V
C324	1-164-346-11	CERAMIC CHIP	1uF		16V
C325	1-164-346-11	CERAMIC CHIP	1uF		16V
C327	1-164-346-11	CERAMIC CHIP	1uF		16V
C401	1-127-561-11	ELECT(SOLID)	33uF	20%	10V
C402	1-127-561-11	ELECT(SOLID)	33uF	20%	10V
C403	1-127-561-11	ELECT(SOLID)	33uF	20%	10V

MAIN

Ref. No.	Part No.	Description			Remark
C404	1-124-584-00	ELECT	100uF	20%	10V
C405	1-135-157-21	TANTALUM CHIP	10uF	20%	6.3V
C406	1-164-346-11	CERAMIC CHIP	1uF		16V
C407	1-124-434-00	ELECT	220uF	20%	4V
C408	1-163-109-00	CERAMIC CHIP	47PF	5%	50V
C409	1-163-125-00	CERAMIC CHIP	220PF	5%	50V
C410	1-128-057-11	ELECT	330uF	20%	6.3V
C411	1-163-038-00	CERAMIC CHIP	0.1uF		25V
C412	1-135-157-21	TANTALUM CHIP	10uF	20%	6.3V
C413	1-135-211-11	TANTAL. CHIP	6.8uF	20%	6.3V
C420	1-126-206-11	ELECT CHIP	100uF	20%	6.3V
C501	1-163-038-00	CERAMIC CHIP	0.1uF		25V
C502	1-163-989-11	CERAMIC CHIP	0.033uF	10%	25V
C503	1-164-232-11	CERAMIC CHIP	0.01uF		50V
C504	1-135-201-11	TANTALUM CHIP	10uF	20%	4V
C505	1-164-505-11	CERAMIC CHIP	2.2uF		16V
C506	1-164-156-11	CERAMIC CHIP	0.1uF		25V
C507	1-124-434-00	ELECT	220uF	20%	4V
C508	1-163-038-00	CERAMIC CHIP	0.1uF		25V
C509	1-124-434-00	ELECT	220uF	20%	4V
C510	1-164-232-11	CERAMIC CHIP	0.01uF		50V
C511	1-163-095-00	CERAMIC CHIP	12PF	5%	50V
C512	1-124-431-00	ELECT	33uF	20%	4V
C513	1-162-970-11	CERAMIC CHIP	0.01uF	10%	25V
C514	1-124-434-00	ELECT	220uF	20%	4V
C515	1-164-346-11	CERAMIC CHIP	1uF		16V
C516	1-164-156-11	CERAMIC CHIP	0.1uF		25V
C517	1-163-085-00	CERAMIC CHIP	2PF		50V
C518	1-164-232-11	CERAMIC CHIP	0.01uF		50V
C519	1-163-109-00	CERAMIC CHIP	47PF	5%	50V
C520	1-135-151-21	TANTALUM CHIP	4.7uF	20%	4V
C521	1-163-809-11	CERAMIC CHIP	0.047uF	10%	25V
C522	1-126-154-11	ELECT	47uF	20%	6.3V
C524	1-135-202-21	TANTAL. CHIP	22uF	20%	4V
C525	1-135-151-21	TANTALUM CHIP	4.7uF	20%	4V
C526	1-164-156-11	CERAMIC CHIP	0.1uF		25V
C527	1-163-141-00	CERAMIC CHIP	0.001uF	5%	50V
C528	1-163-809-11	CERAMIC CHIP	0.047uF	10%	25V
C529	1-164-346-11	CERAMIC CHIP	1uF		16V
C530	1-163-023-00	CERAMIC CHIP	0.015uF	5%	50V
C531	1-126-518-11	ELECT	470uF	20%	4V
C532	1-163-141-00	CERAMIC CHIP	0.001uF	5%	50V
C533	1-164-346-11	CERAMIC CHIP	1uF		16V
C534	1-163-133-00	CERAMIC CHIP	470PF	5%	50V
C535	1-128-057-11	ELECT	330uF	20%	6.3V
C536	1-163-038-00	CERAMIC CHIP	0.1uF		25V
C537	1-162-968-11	CERAMIC CHIP	0.0047uF	10%	50V
C538	1-164-346-11	CERAMIC CHIP	1uF		16V
C540	1-162-953-11	CERAMIC CHIP	100PF	5%	50V
C541	1-164-156-11	CERAMIC CHIP	0.1uF		25V
C542	1-164-346-11	CERAMIC CHIP	1uF		16V
C543	1-164-346-11	CERAMIC CHIP	1uF		16V
C544	1-163-038-00	CERAMIC CHIP	0.1uF		25V
C545	1-135-157-21	TANTALUM CHIP	10uF	20%	6.3V
C546	1-135-157-21	TANTALUM CHIP	10uF	20%	6.3V
C547	1-135-148-21	TANTAL. CHIP	1.5uF	20%	10V
C549	1-164-232-11	CERAMIC CHIP	0.01uF		50V
C550	1-164-346-11	CERAMIC CHIP	1uF		16V
C551	1-164-156-11	CERAMIC CHIP	0.1uF		25V
C552	1-164-222-11	CERAMIC CHIP	0.22uF		25V
C553	1-164-005-11	CERAMIC CHIP	0.47uF		25V
C554	1-164-346-11	CERAMIC CHIP	1uF		16V
C555	1-163-137-00	CERAMIC CHIP	680PF	5%	50V
C557	1-135-148-21	TANTAL. CHIP	1.5uF	20%	10V
C558	1-135-157-21	TANTALUM CHIP	10uF	20%	6.3V
C559	1-162-964-11	CERAMIC CHIP	0.001uF	10%	50V
C560	1-164-156-11	CERAMIC CHIP	0.1uF		25V
C561	1-164-156-11	CERAMIC CHIP	0.1uF		25V
C562	1-135-202-21	TANTAL. CHIP	22uF	20%	4V
C563	1-163-133-00	CERAMIC CHIP	470PF	5%	50V
C564	1-135-202-21	TANTAL. CHIP	22uF	20%	4V
C601	1-164-346-11	CERAMIC CHIP	1uF		16V
C602	1-163-809-11	CERAMIC CHIP	0.047uF	10%	25V
C603	1-163-145-00	CERAMIC CHIP	0.0015uF	5%	50V
C604	1-135-072-21	TANTALUM CHIP	0.22uF	10%	35V
C605	1-163-117-00	CERAMIC CHIP	100PF	5%	50V
C805	1-164-346-11	CERAMIC CHIP	1uF		16V
C806	1-163-038-00	CERAMIC CHIP	0.1uF		25V
C808	1-164-232-11	CERAMIC CHIP	0.01uF		50V
C809	1-164-005-11	CERAMIC CHIP	0.47uF		25V
C810	1-163-038-00	CERAMIC CHIP	0.1uF		25V
C811	1-164-346-11	CERAMIC CHIP	1uF		16V
C812	1-163-105-00	CERAMIC CHIP	33PF	5%	50V
C814	1-164-346-11	CERAMIC CHIP	1uF		16V
C815	1-163-105-00	CERAMIC CHIP	33PF	5%	50V

< CONNECTOR >

* CN401	1-580-712-21	CONNECTOR, BOARD TO BOARD 5P	
CN501	1-566-534-11	CONNECTOR, FPC (ZIF) 18P	
CN502	1-566-757-11	PIN, CONNECTOR (PC BOARD) 2P	
CN503	1-566-757-11	PIN, CONNECTOR (PC BOARD) 2P	
CN504	1-566-757-11	PIN, CONNECTOR (PC BOARD) 2P	
CNJ302	1-580-680-11	JACK(PHONES/REMOTE)	

< DIODE >

D302	8-719-421-21	DIODE MA8120-L
D303	8-719-421-21	DIODE MA8120-L

MAIN

Ref. No.	Part No.	Description	Remark
D304	8-719-421-21	DIODE MA8120-L	
D305	8-719-421-21	DIODE MA8120-L	
D306	8-719-421-21	DIODE MA8120-L	
D307	8-719-421-21	DIODE MA8120-L	
D401	8-719-404-46	DIODE MA110	
D402	8-719-938-72	DIODE SB01-05CP	
D403	8-719-420-51	DIODE MA729	
D404	8-719-938-72	DIODE SB01-05CP	
D405	8-719-104-34	DIODE 1S2836	
D406	8-719-104-34	DIODE 1S2836	
D407	8-719-938-72	DIODE SB01-05CP	
D408	8-719-975-40	DIODE RB411D	
D409	8-719-404-46	DIODE MA110	
D410	8-719-404-46	DIODE MA110	
D411	8-719-938-72	DIODE SB01-05CP	
D412	8-719-105-82	DIODE RD5.1M-B2	
D413	8-719-404-46	DIODE MA110	
D414	8-719-105-91	DIODE RD5.6M-B2	
D415	8-719-987-45	DIODE CL-155Y/PG-CD	
D416	8-719-987-45	DIODE CL-155Y/PG-CD	
D417	8-719-987-45	DIODE CL-155Y/PG-CD	
D418	8-719-987-45	DIODE CL-155Y/PG-CD	
D419	8-719-987-45	DIODE CL-155Y/PG-CD	
D420	8-719-987-45	DIODE CL-155Y/PG-CD	
D421	8-719-987-45	DIODE CL-155Y/PG-CD	
D422	8-719-987-45	DIODE CL-155Y/PG-CD	
D423	8-719-987-45	DIODE CL-155Y/PG-CD	
D424	8-719-987-45	DIODE CL-155Y/PG-CD	
D425	8-719-987-45	DIODE CL-155Y/PG-CD	
D426	8-719-987-45	DIODE CL-155Y/PG-CD	
D427	8-719-987-45	DIODE CL-155Y/PG-CD	
D428	8-719-987-45	DIODE CL-155Y/PG-CD	
D429	8-719-987-45	DIODE CL-155Y/PG-CD	
D501	8-719-938-72	DIODE SB01-05CP	
D502	8-719-938-72	DIODE SB01-05CP	
D503	8-719-986-76	DIODE SB007W03C	
D504	8-719-986-76	DIODE SB007W03C	
D801	8-719-404-46	DIODE MA110	
D802	8-719-404-46	DIODE MA110	
D803	8-719-404-46	DIODE MA110	
D804	8-719-938-72	DIODE SB01-05CP	
D805	8-719-404-46	DIODE MA110	
D806	8-719-400-18	DIODE MA152WK	
D809	8-719-404-46	DIODE MA110	
D810	8-719-104-34	DIODE 1S2836	
D812	8-719-421-21	DIODE MA8120-L	
D813	8-719-421-21	DIODE MA8120-L	
D899	8-719-108-12	DIODE RD9.1EW	

Ref. No.	Part No.	Description	Remark
		< FERRITE BEAD >	
FB101	1-543-813-21	BEAD, FERRITE	
FB102	1-543-813-21	BEAD, FERRITE	
FB201	1-543-813-21	BEAD, FERRITE	
FB202	1-543-813-21	BEAD, FERRITE	
FB306	1-543-813-21	BEAD, FERRITE	
FB307	1-543-813-21	BEAD, FERRITE	
FB801	1-543-813-21	BEAD, FERRITE	
FB802	1-543-813-21	BEAD, FERRITE	
FB803	1-543-813-21	BEAD, FERRITE	
FB804	1-543-813-21	BEAD, FERRITE	
		< IC >	
IC301	8-752-332-80	IC CXD1160AQ	
IC302	8-759-501-31	IC SM5840CS	
IC303	8-759-506-65	IC PCM67U-K	
IC304	8-759-710-55	IC NJM2100M	
IC305	8-759-510-56	IC BA3570FS	
IC306	8-759-710-55	IC NJM2100M	
IC401	8-759-994-55	IC RH5RC351A	
IC501	8-752-033-55	IC CXA1271Q	
IC502	8-752-033-98	IC CXA1272R	
IC504	8-759-031-89	IC MPC1716FU	
IC505	8-759-031-84	IC SC7S04F	
IC601	8-752-337-26	IC CXD2500AQ	
IC602	8-759-234-13	IC TC4S30F	
IC801	8-752-830-19	IC CXP5078H-609Q	
IC802	8-759-509-91	IC XRA10393F	
IC803	8-759-517-31	IC S-8052-ANY-NH	
IC804	8-759-998-45	IC BA3818F-SY	
		< JACK >	
J301	1-565-287-41	JACK (LINE OUT)	
J801	1-573-701-11	JACK (REMOTE)	
		< JUMPER >	
JR301	1-216-295-00	METAL CHIP 0 5% 1/10W	
JR302	1-216-295-00	METAL CHIP 0 5% 1/10W	
JR398	1-216-296-00	METAL GLAZE 0 5% 1/8W	
JR399	1-216-864-00	METAL GLAZE 0 5% 1/16W	
JR402	1-216-295-00	METAL CHIP 0 5% 1/10W	
JR501	1-216-295-00	METAL CHIP 0 5% 1/10W	
JR503	1-216-295-00	METAL CHIP 0 5% 1/10W	
JR504	1-216-295-00	METAL CHIP 0 5% 1/10W	
JR505	1-216-295-00	METAL CHIP 0 5% 1/10W	
JR506	1-216-295-00	METAL CHIP 0 5% 1/10W	
JR507	1-216-295-00	METAL CHIP 0 5% 1/10W	
JR508	1-216-295-00	METAL CHIP 0 5% 1/10W	

MAIN

Ref. No.	Part No.	Description				Remark
JR509	1-216-864-11	METAL CHIP	0			
JR510	1-216-295-00	METAL CHIP	0	5%	1/10W	
JR511	1-216-864-11	METAL CHIP	0			
JR801	1-216-295-00	METAL CHIP	0	5%	1/10W	
		< COIL >				
L301	1-410-997-31	INDUCTOR CHIP	2.2uH			
L302	1-410-196-11	INDUCTOR CHIP	2.2uH			
L303	1-412-029-11	INDUCTOR, CHIP	10uH			
L304	1-412-029-11	INDUCTOR, CHIP	10uH			
L308	1-410-196-11	INDUCTOR CHIP	2.2uH			
L402	1-412-622-51	INDUCTOR	10uH			
L403	1-412-029-11	INDUCTOR, CHIP	10uH			
L404	1-450-401-11	TRANSFORMER, CONVERTER DC-DC				
L405	1-412-039-51	INDUCTOR CHIP	100uH			
L406	1-412-029-11	INDUCTOR, CHIP	10uH			
L407	1-412-029-11	INDUCTOR, CHIP	10uH			
L408	1-412-029-11	INDUCTOR, CHIP	10uH			
L444	1-412-030-11	INDUCTOR, CHIP	22uH			
L502	1-412-039-51	INDUCTOR CHIP	100uH			
L504	1-412-039-51	INDUCTOR CHIP	100uH			
L506	1-412-039-51	INDUCTOR CHIP	100uH			
L508	1-412-039-51	INDUCTOR CHIP	100uH			
L510	1-412-029-11	INDUCTOR, CHIP	10uH			
L601	1-410-196-11	INDUCTOR CHIP	2.2uH			
		< DISPLAY PANEL >				
LCD	1-809-483-11	DISPLAY PANEL, LIQUID CRYSTAL				
		< PILOT LAMP >				
PL401	1-518-684-11	LAMP, PILOT				
		< TRANSISTOR >				
Q101	8-729-921-72	TRANSISTOR 2SD1781K-R				
Q102	8-729-923-36	TRANSISTOR 2SD1963-Q.R				
Q201	8-729-921-72	TRANSISTOR 2SD1781K-R				
Q202	8-729-923-36	TRANSISTOR 2SD1963-Q.R				
Q301	8-729-141-48	TRANSISTOR 2SB624-BV345				
Q302	8-729-920-74	TRANSISTOR 2SC2412K-QR				
Q303	8-729-922-10	TRANSISTOR 2SA1577-QR				
Q304	8-729-903-10	TRANSISTOR FMW1				
Q305	8-729-901-05	TRANSISTOR DTA124EK				
Q306	8-729-920-74	TRANSISTOR 2SC2412K-QR				
Q307	8-729-902-93	TRANSISTOR FMG4				
Q401	8-729-922-34	TRANSISTOR 2SD1758F5-QR				
Q402	8-729-901-00	TRANSISTOR DTC124EK				
Q403	8-729-216-22	TRANSISTOR 2SA1162-G				
Q404	8-729-923-36	TRANSISTOR 2SD1963-Q.R				

Ref. No.	Part No.	Description				Remark
Q405	8-729-806-75	TRANSISTOR 2SB1120				
Q406	8-729-901-00	TRANSISTOR DTC124EK				
Q407	8-729-920-65	TRANSISTOR DTC123EK				
Q408	8-729-806-75	TRANSISTOR 2SB1120				
Q409	8-729-900-53	TRANSISTOR DTC114EK				
Q410	8-729-806-75	TRANSISTOR 2SB1120				
Q411	8-729-420-74	TRANSISTOR 2SD1328-RST				
Q412	8-729-901-00	TRANSISTOR DTC124EK				
Q413	8-729-901-00	TRANSISTOR DTC124EK				
Q415	8-729-921-72	TRANSISTOR 2SD1781K-R				
Q416	8-729-921-72	TRANSISTOR 2SD1781K-R				
Q417	8-729-901-01	TRANSISTOR DTC144EK				
Q418	8-729-901-00	TRANSISTOR DTC124EK				
Q419	8-729-920-74	TRANSISTOR 2SC2412K-QR				
Q420	8-729-901-05	TRANSISTOR DTA124EK				
Q421	8-729-901-06	TRANSISTOR DTA144EK				
Q426	8-729-923-36	TRANSISTOR 2SD1963-Q.R				
Q501	8-729-402-90	TRANSISTOR XN4609				
Q502	8-729-901-05	TRANSISTOR DTA124EK				
Q503	8-729-901-05	TRANSISTOR DTA124EK				
Q504	8-729-901-00	TRANSISTOR DTC124EK				
Q505	8-729-901-00	TRANSISTOR DTC124EK				
Q506	8-729-901-00	TRANSISTOR DTC124EK				
Q507	8-729-907-53	TRANSISTOR DTC143ZK				
Q508	8-729-901-00	TRANSISTOR DTC124EK				
Q509	8-729-901-00	TRANSISTOR DTC124EK				
Q510	8-729-907-53	TRANSISTOR DTC143ZK				
Q511	8-729-901-05	TRANSISTOR DTA124EK				
Q801	8-729-901-05	TRANSISTOR DTA124EK				
Q803	8-729-901-05	TRANSISTOR DTA124EK				
Q804	8-729-905-57	TRANSISTOR DTA124EU				
Q805	8-729-901-05	TRANSISTOR DTA124EK				
Q806	8-729-402-16	TRANSISTOR XN4608				
Q807	8-729-921-72	TRANSISTOR 2SD1781K-R				
Q808	8-729-901-00	TRANSISTOR DTC124EK				
		< RESISTOR >				
R101	1-216-031-00	METAL CHIP	180	5%	1/10W	
R102	1-216-659-11	METAL CHIP	2.2K	0.5%	1/10W	
R103	1-216-645-11	METAL CHIP	560	0.5%	1/10W	
R104	1-216-037-00	METAL CHIP	330	5%	1/10W	
R105	1-216-657-11	METAL CHIP	1.8K	0.5%	1/10W	
R106	1-216-657-11	METAL CHIP	1.8K	0.5%	1/10W	
R107	1-216-047-00	METAL CHIP	820	5%	1/10W	
R108	1-216-823-11	METAL CHIP	1.5K	5%	1/16W	
R109	1-216-845-11	METAL CHIP	100K	5%	1/16W	
R110	1-216-033-00	METAL CHIP	220	5%	1/10W	
R111	1-216-801-11	METAL CHIP	22	5%	1/16W	
R112	1-216-833-11	METAL CHIP	10K	5%	1/16W	

MAIN

Ref. No.	Part No.	Description				Remark
R113	1-216-043-00	METAL CHIP	560	5%	1/10W	
R114	1-216-065-00	METAL CHIP	4.7K	5%	1/10W	
R115	1-216-833-11	METAL CHIP	10K	5%	1/16W	
R116	1-216-832-11	METAL CHIP	8.2K	5%	1/16W	
R117	1-216-833-11	METAL CHIP	10K	5%	1/16W	
R201	1-216-812-11	METAL CHIP	180	5%	1/16W	
R202	1-216-659-11	METAL CHIP	2.2K	0.5%	1/10W	
R203	1-216-645-11	METAL CHIP	560	0.5%	1/10W	
R204	1-216-815-11	METAL CHIP	330	5%	1/16W	
R205	1-218-698-91	METAL CHIP	1.8K	0.50%	1/16W	
R206	1-218-698-91	METAL CHIP	1.8K	0.50%	1/16W	
R207	1-216-047-00	METAL CHIP	820	5%	1/10W	
R208	1-216-823-11	METAL CHIP	1.5K	5%	1/16W	
R209	1-216-845-11	METAL CHIP	100K	5%	1/16W	
R210	1-216-813-11	METAL CHIP	220	5%	1/16W	
R211	1-216-801-11	METAL CHIP	22	5%	1/16W	
R212	1-216-833-11	METAL CHIP	10K	5%	1/16W	
R213	1-216-043-00	METAL CHIP	560	5%	1/10W	
R214	1-216-065-00	METAL CHIP	4.7K	5%	1/10W	
R215	1-216-833-11	METAL CHIP	10K	5%	1/16W	
R216	1-216-832-11	METAL CHIP	8.2K	5%	1/16W	
R217	1-216-833-11	METAL CHIP	10K	5%	1/16W	
R301	1-216-121-00	METAL CHIP	1M	5%	1/10W	
R302	1-216-001-00	METAL CHIP	10	5%	1/10W	
R303	1-216-837-11	METAL CHIP	22K	5%	1/16W	
R304	1-216-849-11	METAL CHIP	220K	5%	1/16W	
R305	1-216-821-11	METAL CHIP	1K	5%	1/16W	
R306	1-216-825-11	METAL CHIP	2.2K	5%	1/16W	
R307	1-216-049-00	METAL CHIP	1K	5%	1/10W	
R308	1-216-069-00	METAL CHIP	6.8K	5%	1/10W	
R309	1-216-101-00	METAL CHIP	150K	5%	1/10W	
R310	1-216-057-00	METAL CHIP	2.2K	5%	1/10W	
R311	1-216-674-11	METAL CHIP	9.1K	0.5%	1/10W	
R312	1-216-821-11	METAL CHIP	1K	5%	1/16W	
R313	1-216-009-00	METAL GLAZE	22	5%	1/10W	
R315	1-216-825-11	METAL CHIP	2.2K	5%	1/16W	
R316	1-216-057-00	METAL CHIP	2.2K	5%	1/10W	
R401	1-216-184-00	METAL GLAZE	270	5%	1/8W	
R402	1-216-827-11	METAL CHIP	3.3K	5%	1/16W	
R403	1-216-073-00	METAL CHIP	10K	5%	1/10W	
R404	1-216-073-00	METAL CHIP	10K	5%	1/10W	
R405	1-216-172-00	METAL CHIP	82	5%	1/8W	
R406	1-216-840-11	METAL CHIP	39K	5%	1/16W	
R407	1-216-830-11	METAL CHIP	5.6K	5%	1/16W	
R408	1-218-609-11	METAL CHIP	3.9	5%	1W	
R409	1-216-041-00	METAL CHIP	470	5%	1/10W	
R410	1-216-061-00	METAL CHIP	3.3K	5%	1/10W	
R411	1-216-134-00	METAL CHIP	2.2	5%	1/8W	
R412	1-216-025-00	METAL CHIP	100	5%	1/10W	
R413	1-216-748-11	METAL CHIP	39K	1%	1/10W	
R414	1-216-033-00	METAL CHIP	220	5%	1/10W	
R415	1-216-748-11	METAL CHIP	39K	1%	1/10W	
R416	1-216-829-11	METAL CHIP	4.7K	5%	1/16W	
R417	1-216-833-11	METAL CHIP	10K	5%	1/16W	
R418	1-216-065-00	METAL CHIP	4.7K	5%	1/10W	
R419	1-216-073-00	METAL CHIP	10K	5%	1/10W	
R420	1-216-049-00	METAL CHIP	1K	5%	1/10W	
R421	1-216-009-00	METAL GLAZE	22	5%	1/10W	
R422	1-216-821-11	METAL GLAZE	1K	5%	1/16W	
R425	1-216-109-00	METAL CHIP	330K	5%	1/10W	
R426	1-216-045-00	METAL CHIP	680	5%	1/10W	
R427	1-216-001-00	METAL CHIP	10	5%	1/10W	
R428	1-216-017-00	METAL CHIP	47	5%	1/10W	
R429	1-216-805-11	METAL CHIP	47	5%	1/16W	
R430	1-216-805-11	METAL CHIP	47	5%	1/16W	
R431	1-216-805-11	METAL CHIP	47	5%	1/16W	
R432	1-216-805-11	METAL CHIP	47	5%	1/16W	
R433	1-216-805-11	METAL CHIP	47	5%	1/16W	
R434	1-216-805-11	METAL CHIP	47	5%	1/16W	
R435	1-216-025-00	METAL CHIP	100	5%	1/10W	
R436	1-216-809-11	METAL CHIP	100	5%	1/16W	
R437	1-216-023-00	METAL CHIP	82	5%	1/10W	
R438	1-216-809-11	METAL CHIP	100	5%	1/16W	
R439	1-216-809-11	METAL CHIP	100	5%	1/16W	
R440	1-216-809-11	METAL CHIP	100	5%	1/16W	
R441	1-216-809-11	METAL CHIP	100	5%	1/16W	
R442	1-216-073-00	METAL CHIP	10K	5%	1/10W	
R443	1-216-158-00	METAL GLAZE	22	5%	1/8W	
R444	1-216-081-00	METAL CHIP	22K	5%	1/10W	
R445	1-216-184-00	METAL GLAZE	270	5%	1/8W	
R446	1-216-184-00	METAL GLAZE	270	5%	1/8W	
R448	1-216-121-00	METAL CHIP	1M	5%	1/10W	
R449	1-216-801-11	METAL CHIP	22	5%	1/16W	
R450	1-216-184-00	METAL GLAZE	270	5%	1/8W	
R460	1-216-178-00	METAL GLAZE	150	5%	1/8W	
R502	1-216-827-11	METAL CHIP	3.3K	5%	1/16W	
R503	1-216-825-11	METAL CHIP	2.2K	5%	1/16W	
R504	1-216-831-11	METAL CHIP	6.8K	5%	1/16W	
R505	1-216-121-00	METAL CHIP	1M	5%	1/10W	
R506	1-216-081-00	METAL CHIP	22K	5%	1/10W	
R507	1-216-077-00	METAL CHIP	15K	5%	1/10W	
R508	1-216-068-00	METAL CHIP	6.2K	5%	1/10W	
R509	1-216-073-00	METAL CHIP	10K	5%	1/10W	
R510	1-216-797-11	METAL CHIP	10	5%	1/16W	
R511	1-216-097-00	METAL CHIP	100K	5%	1/10W	
R512	1-216-833-11	METAL CHIP	10K	5%	1/16W	
R515	1-216-049-00	METAL CHIP	1K	5%	1/10W	
R516	1-216-117-00	METAL CHIP	680K	5%	1/10W	

MAIN

Ref. No.	Part No.	Description			Remark
R517	1-216-097-00	METAL CHIP	100K	5%	1/10W
R518	1-216-057-00	METAL CHIP	2.2K	5%	1/10W
R519	1-216-095-00	METAL CHIP	82K	5%	1/10W
R520	1-216-105-00	METAL CHIP	220K	5%	1/10W
R521	1-216-837-11	METAL CHIP	22K	5%	1/16W
R522	1-216-097-00	METAL CHIP	100K	5%	1/10W
R523	1-216-065-00	METAL CHIP	4.7K	5%	1/10W
R524	1-216-115-00	METAL CHIP	560K	5%	1/10W
R525	1-216-073-00	METAL CHIP	10K	5%	1/10W
R526	1-216-829-11	METAL CHIP	4.7K	5%	1/16W
R527	1-216-683-11	METAL CHIP	22K	0.5%	1/10W
R528	1-216-847-11	METAL CHIP	150K	5%	1/16W
R529	1-216-062-00	METAL CHIP	3.6K	5%	1/10W
R530	1-216-059-00	METAL CHIP	2.7K	5%	1/10W
R531	1-216-097-00	METAL CHIP	100K	5%	1/10W
R532	1-216-683-11	METAL CHIP	22K	0.5%	1/10W
R533	1-216-829-11	METAL CHIP	4.7K	5%	1/16W
R535	1-216-863-11	METAL GLAZE	3.3M	5%	1/16W
R536	1-216-844-11	METAL CHIP	82K	5%	1/16W
R537	1-216-837-11	METAL CHIP	22K	5%	1/16W
R539	1-216-857-11	METAL CHIP	1M	5%	1/16W
R541	1-216-820-11	METAL CHIP	820	5%	1/16W
R542	1-216-053-00	METAL CHIP	1.5K	5%	1/10W
R543	1-216-091-00	METAL CHIP	56K	5%	1/10W
R544	1-216-748-11	METAL CHIP	39K	1%	1/10W
R545	1-216-049-00	METAL CHIP	1K	5%	1/10W
R549	1-216-857-11	METAL CHIP	1M	5%	1/16W
R550	1-216-057-00	METAL CHIP	2.2K	5%	1/10W
R551	1-216-057-00	METAL CHIP	2.2K	5%	1/10W
R552	1-216-061-00	METAL CHIP	3.3K	5%	1/10W
R553	1-216-073-00	METAL CHIP	10K	5%	1/10W
R554	1-216-101-00	METAL CHIP	150K	5%	1/10W
R555	1-216-854-11	METAL CHIP	560K	5%	1/16W
R556	1-216-081-00	METAL CHIP	22K	5%	1/10W
R557	1-216-821-11	METAL CHIP	1K	5%	1/16W
R559	1-216-093-00	METAL CHIP	68K	5%	1/10W
R562	1-216-845-11	METAL CHIP	100K	5%	1/16W
R563	1-216-099-00	METAL CHIP	120K	5%	1/10W
R564	1-216-843-11	METAL CHIP	68K	5%	1/16W
R565	1-216-843-11	METAL CHIP	68K	5%	1/16W
R566	1-218-744-11	METAL CHIP	150K	0.50%	1/16W
R567	1-216-843-11	METAL CHIP	68K	5%	1/16W
R568	1-216-843-11	METAL CHIP	68K	5%	1/16W
R569	1-218-744-11	METAL CHIP	150K	0.50%	1/16W
R570	1-216-833-11	METAL CHIP	10K	5%	1/16W
R571	1-216-829-11	METAL CHIP	4.7K	5%	1/16W
R572	1-216-829-11	METAL CHIP	4.7K	5%	1/16W
R601	1-216-845-11	METAL CHIP	100K	5%	1/16W
R602	1-216-061-00	METAL CHIP	3.3K	5%	1/10W
R603	1-216-061-00	METAL CHIP	3.3K	5%	1/10W
R604	1-216-082-00	METAL GLAZE	24K	5%	1/10W
R605	1-216-833-11	METAL CHIP	10K	5%	1/16W
R606	1-216-833-11	METAL CHIP	10K	5%	1/16W
R607	1-216-089-00	METAL CHIP	47K	5%	1/10W
R608	1-216-089-00	METAL CHIP	47K	5%	1/10W
R801	1-216-828-00	METAL CHIP	3.9K	5%	1/16W
R802	1-216-837-11	METAL CHIP	22K	5%	1/16W
R803	1-216-837-11	METAL CHIP	22K	5%	1/16W
R804	1-216-837-11	METAL CHIP	22K	5%	1/16W
R806	1-216-081-00	METAL CHIP	22K	5%	1/10W
R807	1-216-109-00	METAL CHIP	330K	5%	1/10W
R808	1-216-125-00	METAL CHIP	1.5M	5%	1/10W
R810	1-216-025-00	METAL CHIP	100	5%	1/10W
R811	1-216-097-00	METAL CHIP	100K	5%	1/10W
R812	1-216-663-11	METAL CHIP	3.3K	0.5%	1/10W
R813	1-216-681-11	METAL CHIP	18K	0.5%	1/10W
R814	1-216-839-11	METAL CHIP	33K	5%	1/16W
R815	1-216-073-00	METAL CHIP	10K	5%	1/10W
R816	1-216-105-00	METAL CHIP	220K	5%	1/10W
R817	1-216-123-11	METAL CHIP	1.2M	5%	1/10W
R818	1-216-039-00	METAL CHIP	390	5%	1/10W
R819	1-216-809-11	METAL CHIP	100	5%	1/16W
R820	1-216-845-11	METAL CHIP	100K	5%	1/16W
R821	1-216-833-11	METAL CHIP	10K	5%	1/16W
R822	1-216-854-11	METAL CHIP	560K	5%	1/16W
R823	1-216-073-00	METAL CHIP	10K	5%	1/10W
R824	1-216-073-00	METAL CHIP	10K	5%	1/10W
R825	1-216-073-00	METAL CHIP	10K	5%	1/10W
R826	1-216-073-00	METAL CHIP	10K	5%	1/10W
R827	1-216-059-00	METAL CHIP	2.7K	5%	1/10W
R828	1-216-059-00	METAL CHIP	2.7K	5%	1/10W
R829	1-216-059-00	METAL CHIP	2.7K	5%	1/10W
R830	1-216-059-00	METAL CHIP	2.7K	5%	1/10W
R831	1-216-129-00	METAL CHIP	2.2M	5%	1/10W
R832	1-218-344-11	METAL GLAZE	7.5K	5%	1/16W

< VARIABLE RESISTOR >

RV301	1-230-485-11	RES, VAR, CARBON 10K/10K (VOLUME)
RV401	1-241-394-11	RES, ADJ, METAL GLAZE 4.7K (+3.5V)
RV501	1-241-396-11	RES, ADJ, METAL GLAZE 22K (TRACKING GAIN)
RV502	1-241-396-11	RES, ADJ, METAL GLAZE 22K (TRACKING BALANCE)
RV503	1-241-397-11	RES, ADJ, METAL GLAZE 47K (FOCUS BIAS)
RV504	1-241-392-11	RES, ADJ, METAL GLAZE 1K (VOC)
RV505	1-241-396-11	RES, ADJ, METAL GLAZE 22K (FOCUS GAIN)

MAIN JACK

Ref. No.	Part No.	Description	Remark
		< SWITCH >	
S401	1-572-126-11	SWITCH, PUSH (1 KEY) (BATTERY DETECT SW)	
S402	1-572-272-11	SWITCH, SLIDE (ILLUMINATION)	
S801	1-572-596-11	SWITCH, KEY BOARD (▷II)	
S802	1-572-596-11	SWITCH, KEY BOARD (■)	
S803	1-572-596-11	SWITCH, KEY BOARD (I◁◁)	
S804	1-572-596-11	SWITCH, KEY BOARD (▷▷I)	
S805	1-572-596-11	SWITCH, KEY BOARD (PLAY MODE)	
S806	1-572-596-11	SWITCH, KEY BOARD (REPEAT/ENTER)	
S807	1-572-272-11	SWITCH, SLIDE (HOLD)	
S808	1-572-272-11	SWITCH, SLIDE (RESUME)	
S809	1-570-953-11	SWITCH, PUSH (1 KEY) (OPEN)	
S810	1-572-596-11	SWITCH, KEY BOARD (MODE DSP)	
S811	1-572-596-11	SWITCH, KEY BOARD (EFFECT)	
		< THERMISTOR >	
TH501	1-809-468-11	THERMISTOR, CHIP	
		< CRYSTAL >	
X301	1-577-576-11	VIBRATOR, CRYSTAL (16.9344MHz)	
X801	1-579-267-11	VIBRATOR, CERAMIC	

****

	A-3261-826-A	JACK BOARD, COMPLETE (US, Canadian, AEP, E, AUS)	
		**********	
	A-3261-897-A	JACK BOARD, COMPLETE (UK)	
		**********	
		< CAPACITOR >	
C414	1-135-216-11	TANTALUM CHIP 10uF 20% 10V	
C415	1-162-970-11	CERAMIC CHIP 0.01uF 10% 25V (EXCEPT UK)	
C416	1-162-970-11	CERAMIC CHIP 0.01uF 10% 25V (EXCEPT UK)	
		< CONNECTOR >	
CNJ401	1-580-681-21	JACK, DC (POLARITY UNIFIED TYPE) (DC IN 6V)	
		< DIODE >	
D430	8-719-404-46	DIODE MA110	
D431	8-719-106-08	DIODE RD6.2M-B2	
		< JUMPER >	
JR401	1-216-295-00	METAL CHIP 0 5% 1/10W	

Ref. No.	Part No.	Description	Remark
		< COIL >	
L409	1-412-027-11	INDUCTOR CHIP 2.2uH	
L410	1-412-027-11	INDUCTOR CHIP 2.2uH	
		< TRANSISTOR >	
Q422	*8-729-806-75	TRANSISTOR 2SB1120	
Q423	8-729-920-34	TRANSISTOR DTC143XK	
Q424	8-729-924-39	TRANSISTOR DTC143XU	
Q425	8-729-822-60	TRANSISTOR 2SB1302-S	
		< RESISTOR >	
R423	1-216-194-00	METAL CHIP 680 5% 1/8W	
R424	1-216-194-00	METAL CHIP 680 5% 1/8W	
R451	1-216-049-00	METAL CHIP 1K 5% 1/10W	
R452	1-216-065-00	METAL CHIP 4.7K 5% 1/10W	
R453	1-216-049-00	METAL CHIP 1K 5% 1/10W	
R454	1-216-186-00	METAL GLAZE 330 5% 1/8W	

****

MISCELLANEOUS
****

22	1-452-505-11	MAGNET
⚠102	8-848-212-01	DEVICE, OPTICAL KSS-330A
103	1-570-771-11	SWITCH
108	1-948-418-21	HARNESS

****

Note: The components identified by mark ⚠ or dotted line with mark ⚠ are critical for safety. Replace only with part number specified.	Note: Les composants identifiés par une marque ⚠ sont critiques pour la sécurité. Ne les remplacer que par une pièce portant le numéro spécifié.

Ref. No.	Part No.	Description	Remark
		ACCESSORIES & PACKING MATERIALS	
		**********	
⚠	1-465-266-11	ADAPTOR, AC (AC-64N(CA)) (Canadian)	
⚠	1-465-267-11	ADAPTOR, AC (AC-64N(AE)) (AEP)	
⚠	1-465-269-11	ADAPTOR, AC (AC-64N(UK)) (UK)	
⚠	1-465-520-21	ADAPTOR, AC (AC-64N) (E)	
⚠	1-465-608-11	ADAPTOR, AC (AC-64NA) (US)	
⚠	1-465-270-11	ADAPTOR, AC (AC-64N(AU)) (AUS))	
	1-555-658-21	CORD, CONNECTION	
⚠	1-569-007-11	ADAPTER, CONVERSION 2P(E)	
	1-575-145-11	CORD, CONNECTION	
	1-575-195-11	CORD, CONNECTION	
	1-590-038-21	CORD, CONNECTION (UK)	
	3-701-618-00	BAG, POLYETHYLENE	
	3-753-678-11	MANUAL, INSTRUCTION (ENGLISH, FRENCH, SPANISH) (Canadian, AEC, AEG, E)	
	3-753-678-21	MANUAL, INSTRUCTION (ENGLISH) (US, UK, AUS)	
	3-753-678-41	MANUAL, INSTRUCTION (PORTUGUESE, DUTCH, SWEDISH) (AEC)	
	3-753-678-51	MANUAL, INSTRUCTION (GERMAN, ITALIAN) (AEG)	
*	4-946-034-01	CUSHION (UPPER)	
*	4-946-035-01	CUSHION (LOWER) (US, Canadian, E)	
*	4-946-038-01	INDIVIDUAL CARTON (AEP, UK, AUS)	
*	4-946-043-01	INDIVIDUAL CARTON (US, Canadian, E)	
*	4-946-044-01	CUSHION (LOWER) (AEP, UK, AUS)	
	4-946-265-01	ADAPTOR, CAR MOUNT	
	8-953-307-90	HEADPHONE MDR-A10D SET (UK)	

****

HARDWARE LIST

****

#1	7-685-140-19	SCREW (2X6), TAPPING (B)
#2	7-627-552-48	SCREW, PRECISION +P1.7X4
#3	7-671-155-01	STEEL BALL 3.0
#4	7-627-552-38	SCREW, PRECISION +P1.7X3
#5	7-685-105-19	SCREW (2X8), TAPPING (B)

Note: The components identified by mark ⚠ or dotted line with mark ⚠ are critical for safety. Replace only with part number specified.	Note: Les composants identifiés par une marque ⚠ sont critiques pour la sécurité. Ne les remplacer que par une pièce portant le numéro spécifié.

9-956-623-12

Sony Corporation
General Audio Group

English
92A0225-1
Printed in Japan

Published by Customer Relations and Service Group