D-822K

SERVICE MANUAL

US Model
Canadian Model
AEP Model
E Model
Australian Model
Tourist Model

Model Name Using Similar Mechanism	NEW
CD Mechanism	KSM-331AAN (S)

SPECIFICATIONS

System — Compact disc digital audio system

Laser diode properties — Material : GaAlAs
Wavelength : λ =780nm
Emission duration : Continuous
Laser output : Less than 44.6 μW
(This output is the value measured at a distance of 200mm from the objective lens surface on the Optical Pick-up Block.)

Error correction — Sony Super Strategy Cross Interleave Reed Solomon Code

D—A conversion — 1-bit quartz time-axis control

Frequency response — 20—20,000Hz $^{+0.5}_{-2}$ dB (measured by EIAJ CP-307)

Output (at 4.5V input level) — Line output (stereo minijack)
Output level 0.65V rms at 50kilohms
Headphones (stereo minijack)
4mW + 4mW at 16Ω

General
Power requirements — Supplied
- DC IN 4.5V jack accepts the Sony AC power adaptor for use on :

Where purchased	Operating Voltage
AEP	220—230 V AC, 50 Hz
US, Canadian	120V AC, 60 Hz
E, EA, JE	110—240 V AC, 50/60 Hz
Australian	240 V AC, 50 Hz
Other countries	100—240 V AC, 50/60 Hz

- DC IN 4.5V jack accepts the car battery cord for use on car battery.

Not supplied:
- DC 2.4 V rechargeable battery pack
- DC 3 V two size AA (LR6) alkaline batteries (for the unit)
- DC 3 V two size AA (R6) batteries (for remote commander)

Dimensions — Approx. 138 x 31.5 x 159.0 mm
(5 1/2×1 1/4×6 3/8 in.)(whd)
incl. projecting parts and controls

Mass — Approx. 310g (11 oz) not incl. rechargeable battery

Supplied accessories — AC power adaptor (1)
Wireless remote commander (1)
Velcro tapes for the CD player (2)
Velcro tape for the remote commander (1)
Connecting cord
(phono plug x 2 ←→ stereo miniplug) (1)
car battery cord (1)
Spare fuse (1)
Spiral tube (1)
Car connecting pack (1)

Design and specifications subject to change without notice.

● Abbreviations
EA : Saudi Arabia model
JE : Tourist model

COMPACT DISC COMPACT PLAYER

SONY®

MICROFILM

TABLE OF CONTENTS

SAFETY-RELATED COMPONENT WARNING!!

COMPONENTS IDENTIFIED BY MARK ⚠ OR DOTTED LINE WITH MARK ⚠ ON THE SCHEMATIC DIAGRAMS AND IN THE PARTS LIST ARE CRITICAL TO SAFE OPERATION. REPLACE THESE COMPONENTS WITH SONY PARTS WHOSE PART NUMBERS APPEAR AS SHOWN IN THIS MANUAL OR IN SUPPLEMENTS PUBLISHED BY SONY.

ATTENTION AU COMPOSANT AYANT RAPPORT À LA SÉCURITÉ!

LES COMPOSANTS IDENTIFIÉS PAR UNE MARQUE ⚠ SUR LES DIAGRAMMES SCHÉMATIQUES ET LA LISTE DES PIÈCES SONT CRITIQUES POUR LA SÉCURITÉ DE FONCTIONNEMENT. NE REMPLACER CES COMPOSANTS QUE PAR DES PIÈCES SONY DONT LES NUMÉROS SONT DONNÉS DANS CE MANUEL OU DANS LES SUPPLÉMENTS PUBLIÉS PAR SONY.

SERVICING NOTES

NOTES ON HANDLING THE OPTICAL PICK-UP BLOCK OR BASE UNIT

The laser diode in the optical pick-up block may suffer electrostatic breakdown because of the potential difference generated by the charged electrostatic load, etc. on clothing and the human body.

During repair, pay attention to electrostatic breakdown and also use the procedure in the printed matter which is included in the repair parts.

The flexible board is easily damaged and should be handled with care.

Flexible Circuit Board Repairing

- Keep the temperature of the soldering iron around 270 ℃ during repairing.
- Do not touch the soldering iron on the same conductor of the circuit board (within 3 times).
- Be careful not to apply force on the conductor when soldering or unsoldering.

Notes on chip componet replacement

- Never reuse a disconnected chip component.
- Notice that the minus side of a tantalum capacitor may be damaged by heat.

Before Replacing the Optical Block

Please be sure to check thoroughly the parameters as par the "Optical Block Checking Procedures" (Part No. : 9-960-027-11) issued separately before replacing the optical block. Note and specifications required to check are given below.

- FOK output : IC601 ㉓ pin
- S carve P-to-P value : 1.5Vp-p
  When checking S curve P-to-P value.
  Remove the lead wire to disc motor and R535.
- RF signal P-to-P value : 0.65Vp-p
- Traverse signal P-to-P value : 0.5Vp-p
- The grating holder can not repair.

Location and Function of Controls

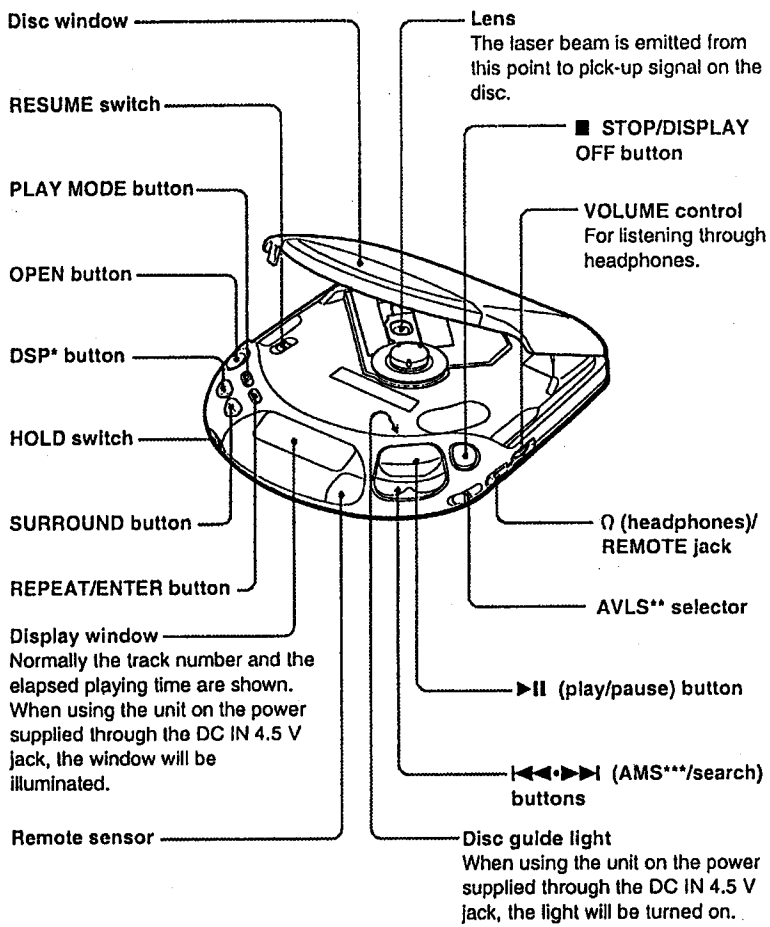

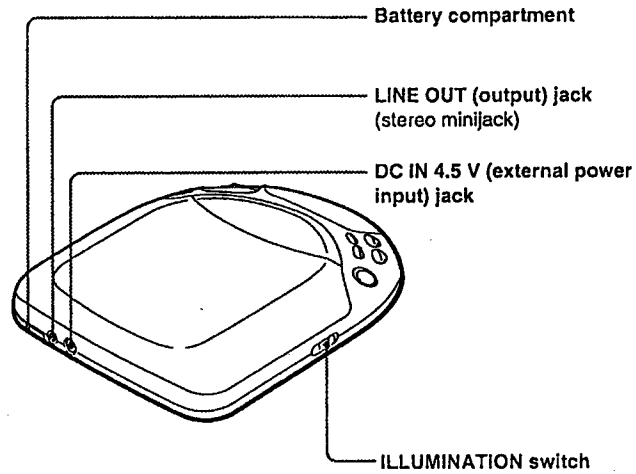

* Digital Signal Processing
** Automatic Volume Limiter System
*** Automatic Music Sensor

To change the illumination colors
Slide the ILLUMINATION switch to GREEN or AMBER. When the unit is in the DSP or SURROUND mode, the DSP or SURROUND button is illuminated with opposite color to the other buttons.

DSP or SURROUND button	Other buttons
amber	green
green	amber

This section is extracted from instruction manual.

SECTION 2
SERVICE MODE

NOTES ON LASER DIODE EMISSION CHECK

The laser beam on this model is concentrated so as to be focused on the disc reflective surface by the objective lens in the optical pick-up block.

Therefore, when checking the laser diode emission, observe more than 30 cm away from the objective lens.

Laser Diode Check Procedure

The laser diode on this set will not emit unless the upper panel is closed and S801 (push switch type) is turned on.

The laser diode will always emit even if focus search is not performed in service mode.

The laser diode is checked using, the current value which flows to the laser diode inside the optical pick-up block.

Procedure 1 (service mode or normal operation)

Check the laser diode emission with the eye.

1. Open upper panel by pushing the OPEN button.
2. S801 on as Fig. 1.
   (In service mode, this operation is not necessary.)
3. Press the ▶II key.
   (In service mode, this operation is not necessary.)
4. Observe the objective lens and confirm that the laser diode goes on about 2.5 seconds due to focus search. If it does not, APC circuit or optical pick-up block is defective.

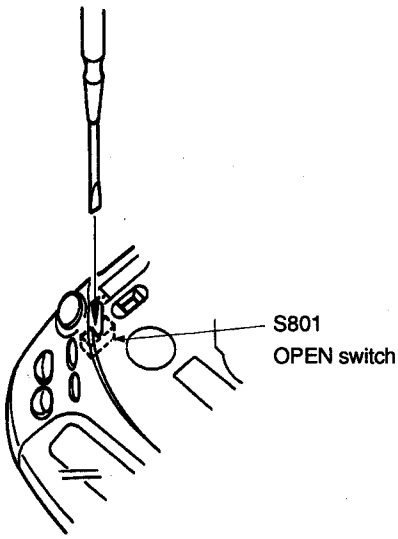

Fig. 1 Turning S801 on

Procedure 2 (service mode or normal operation)

Check by the current with flows in the laser diode.

1. Remove the cabinet.
2. Pick up the optical block by hand and look the rear side of it to see the follwing the label and rear the current value on the label.

   (Label on optical pick-up block)

   

   current value. This means 45.7mA.
   (The current value varies with the set.)
3. Connect a VOM as shown in fig.2.
   (both side of R501 : 1Ω)
4. Press the ▶II key.
5. Calculate the current by the VOM reading.
   VOM reading (V) = current (A)
   ex. VOM reading = 0.045V
   0.045 = 0.045(A) = 45 (mA)
6. Confirm that the ammeter reading is within the range given below.
   value on label $^{+5}_{-11}$mA (25℃)
   variation relative to temperature : 0.4mA/℃
   (Current increases when temperature rises and decreases when it drops.)

If the value is more than the range given, APC circuit has been defective or the laser diode has deteriorated.

If it is less, APC circuit of optical pick-up block is defective.

【MAIN BOARD】(CONDUCTOR SIDE)

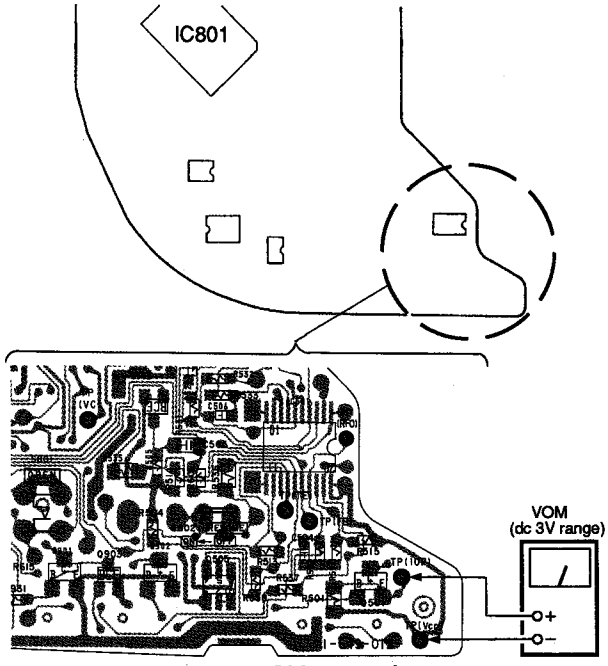

Fig. 2 VOM connecting

SERVICE MODE (service program)

This set has built-in service program in the microcomputer as usual sets.

The operation method of service program is explained below.

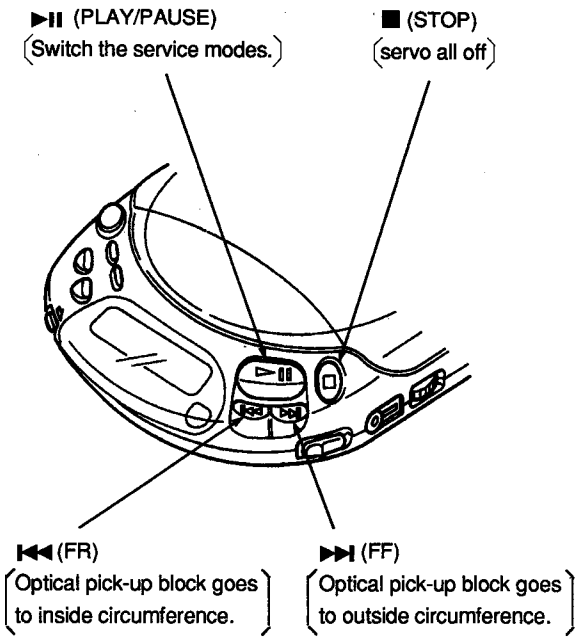

[ ] : Main operation in service mode, for details, refer to step 2.

Fig. 3 Key Positions

· Step 1 (Service Mode setting method)

1. Solder jumper the TEST terminal (IC801 pin ⑱ (XTEST) is grounded.).
2. Plug in the external power supply.
   After performing the above procedure, the set is switched to service modes.

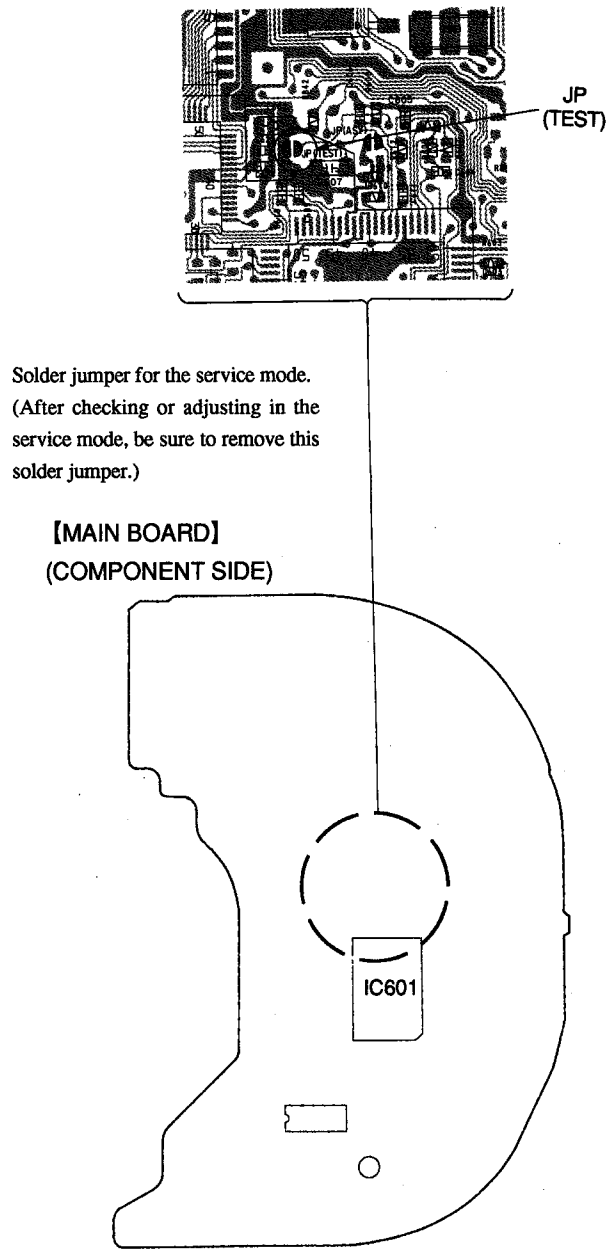

Fig. 4 TEST terminal

· **Step 2 (Service Mode operation)**

1. LCD Display Check mode

   This mode is selected immediately after selecting the service modes. In this mode, LCD display varies into six different patterns and these six patterns are repeated.

   When sliding for ON side the ESP switch in this mode, the ESP is on. (LCD ⁝⁝ mark lights up continuously.)

2. Each time the ▶II key is pressed, the modes are switched as follows.

⓪ LCD Display Check mode

Press the ▶II key.

① Automatic Voltage Adjustment mode

PWM output data (IC801 pin ④ output, PWM signal duty ratio) to control output voltage of DC/DC converter for servo system power supply is displayed on the LCD.

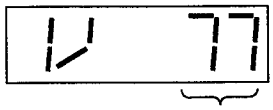

The data appeared are "77" in ESP off and "9F" in ESP on. If data is "00" or "FF", the DC/DC converter may be failure.

Optical pick-up can be moved on and after this mode.

Movement of optical pick-up··· The optical pick-up moves to outside track when the ▶▶I key is passed.
The optical pick-up moves to inside track when the I◀◀ key is passed.

【MAIN BOARD】(CONDUCTOR SIDE)

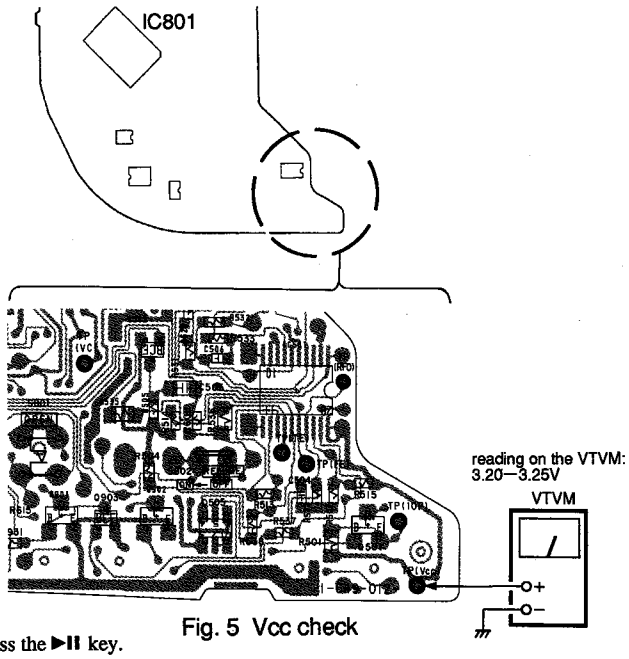

Fig. 5 Vcc check

Press the ▶II key.

② Automatic Average Adjustment mode

DC offset value of RF voltage (IC601 pin ㉖ input) against VC voltage (IC601 pin ㉚ input), and FE voltage (IC601 pin ㉙ input) against VC voltage (IC501 pin ⑨) is displayed on the LCD.

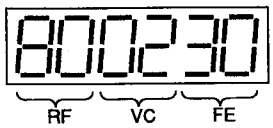

Faulty if the display is "00 00 00" or "FF FF FF". Also, faulty if lower 2 digits (FE voltage) are "20" or less.

＊The laser is turned off in this mode.

Press the ▶II key.

③ Automatic Tracking Balance Adjustment mode

The focus is turned on from the focus search, then the disc motor runs and Automatic Tracking Balance Adjustment mode is activated, if a disc is loaded on the turn table.

A 4-bit tracking balance data is displayed on the LCD.

At this time, optical pick-up can be moved with the ▶▶I or I◀◀ key.

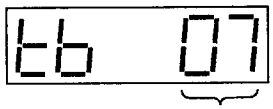

Faulty if the display data is "00" or "FF".

Focus search is repeated many times, if a disc is not loaded on the turn table. In this case, load a disc on the turn table and perform confirmation.

Press the ▶II key.

④ Automatic Focus Gain Adjustment mode

The focus gain is displayed on the LCD.

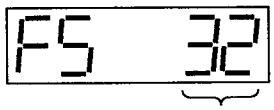

Focus Gain

Press the ▶II key.

⑤ Automatic Tracking Adjustment mode

The tracking gain is displayed on the LCD.

tracking gain

If tracking servo is faulty, "--" is displayed as shown below.

Press the ▶II key.

⑥ Audio signal is output.

"All" is displayed on the LCD.

Press the ▶II key.

⓪ LCD Display Check mode is restored.

3. When the ■ key is pressed, all servo systems (focus, tracking and sled) are turned off and the LCD Display Check mode is restored. However, the disc motor will run for a while due to inertia.

· Step 3 (Service Mode release)

1. First be sure to unplug the external power supply, then remove the TEST terminal solder jumper.
2. The set will now operated normally.

SECTION 3
ELECTRICAL ADJUSTMENTS

Notes on Check Adjustment

1. Confirmation/adjustment should be performed after selecting a service mode. The service mode must be cancelled after confirmation/adjustment is finished.
   (Refer to "Service Mode (service program)" on page 5.)
2. Confirmation/adjustment should be performed in the order listed.
3. Use YEDS-18 disc (part No. : 3-702-101-01) unless otherwise indicated.
4. Power supply voltage : DC4.5V
   HOLD switch : OFF
   VOL knob : Minimum
   AVLS switch : OFF
   RESUME switch : OFF

PREPARATION

Put the set into STOP condition in service mode (See page 5) and perform the following checks. Repair if there are any abnormalities.

· Sled Motor Check

1. Press the ▶II key once, then the ▶▶I and I◀◀ keys to confirm that the optical pick-up moves to inside track → outside track → inside track smoothly free from sticking or noise.
   ▶▶I : optical pick-up block moves outward
   I◀◀ : optical pick-up block moves inward

· Focus Search Check

1. Press the ▶II key 3 times.
   (Focus search is performed continuously.)
2. Observe the optical pick-up block objective lens and check that it moves smoothly up and down with no catching or noises. (It is normal even if it stops for a moment during UP motion.)
3. Press the ■ key.
   Check that focus search operation stops. If it does not, press the ■ key again a little longer time.

VC Connecting Point

FOCUS BIAS CHECK
TRACKING BALANCE CHECK
S-CURVE CHECK

When performing the above confirmation, connect a negative terminal of oscilloscope to the TP (VC) as shown below.

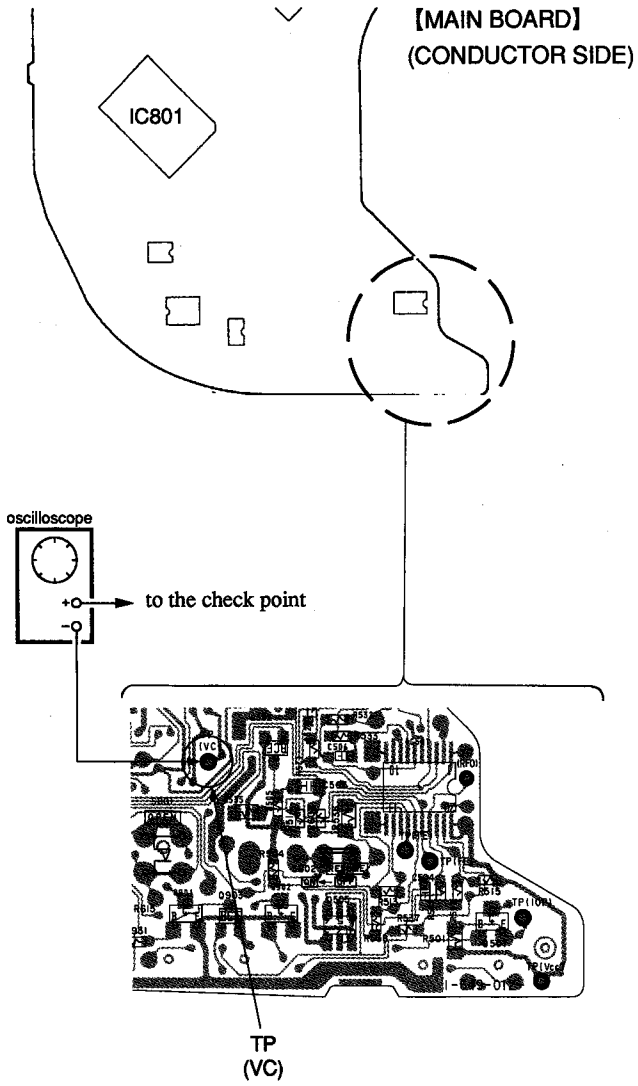

Fig. 6 VC connecting point

PLL Free Run Frequency Check and Adjustment

Check/Adjustment Procedure :

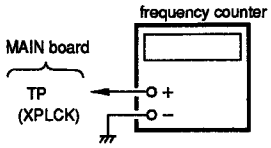

1. Solder to jumper the JP(ASY) of IC601 pin ㊳.
2. Connect a frequency counter to the TP (XPLCK) of IC601 pin ㊸.
3. Select the Automatic Voltage Adjustment mode of service modes. (see page 6).

LCD Display

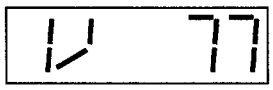

4. Confirm that the frequency counter reading is 4.3218±0.010MHz. If wrong, adjust RV650 so that reading becomes 4.3218±0.010MHz.
5. Cancel the service mode after adjsutment is over.(See page 7).
6. Break the solder jumper to open the JP(ASY).

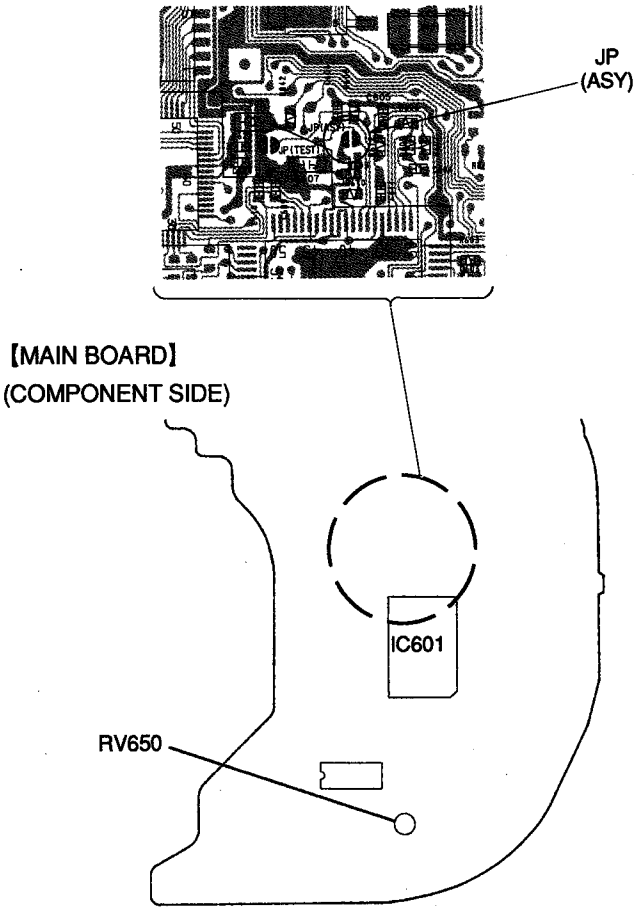

Fig. 7 PLL Free Run Frequency Adjustment Location

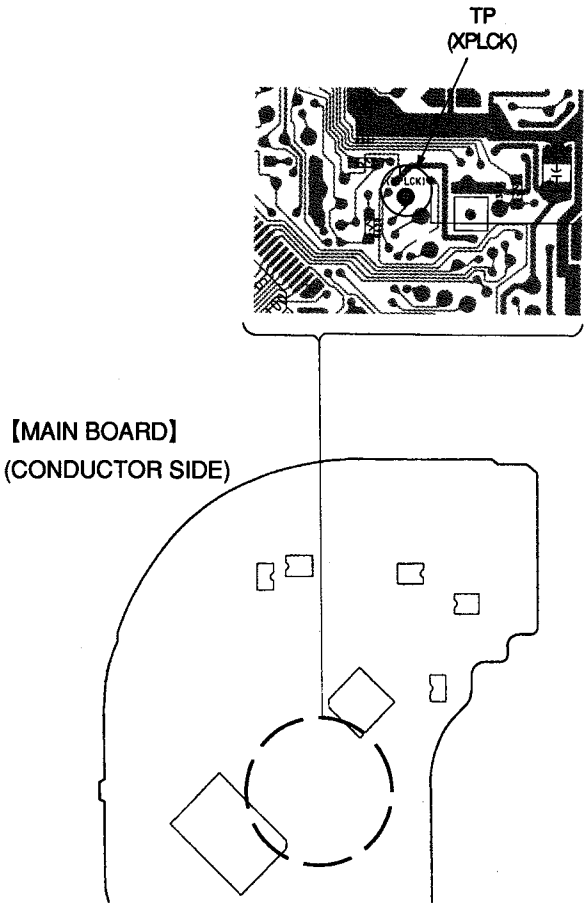

Fig. 8 PLL Free Run Frequency Check Location

S-Curve Check

Conditions :

The set should be placed either horizontally.

Check Procedure :

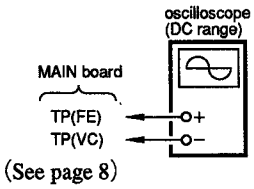

1. Remove R535 on the FE line.
2. Disconnect the connector (CN502) on the disc motor.
3. Connect a oscilloscope the MAIN board TP (FE).
4. Set the disc (YEDS-18).
5. Press the ▶II key 3 times to perform focus serch.
6. Confirm that the A to B rate or B to A rate of oscilloscope waveforms is over 2 : 1, and also the P-P value is 2.5±1Vp-p.

S-Curve check

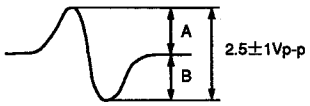

7. After confirmation, reconnect the R535 to FE line and the connector (CN502) to disc motor.

Check Location : MAIN board (CONDUCTOR SIDE)

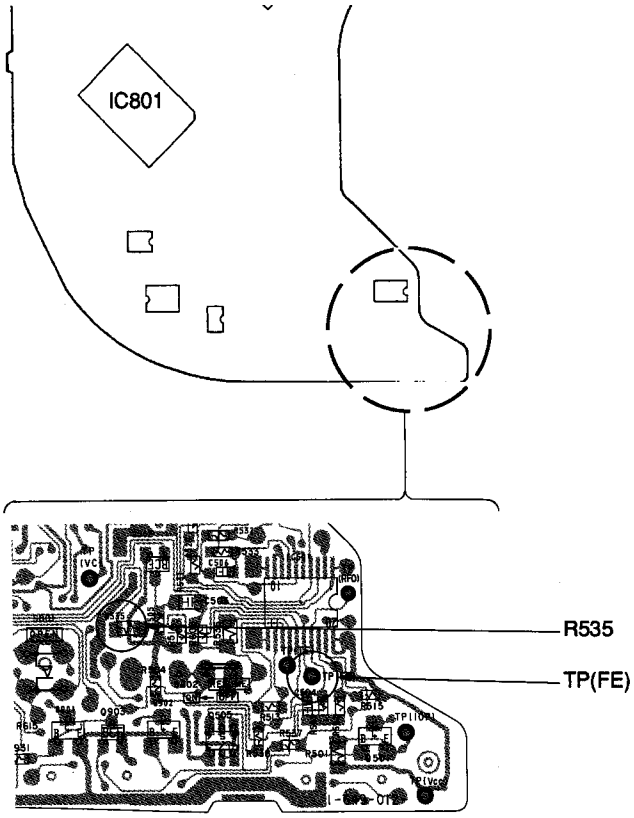

Fig. 9 S-Curve Check Location

Tracking Balance Check

Conditions :

The set should be placed either horizontally.

Check Procedure :

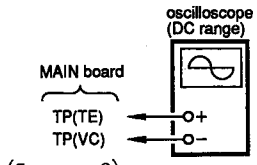

(See page 8)

1. Connect a oscilloscope to MAIN board TP (TE).
2. Put the set into STOP condition in service mode (See page 5).
3. Press the ▶II key 1 time.
4. Press the ▶▶I and I◀◀ keys to move the optical pick-up block to the center.
5. Set the disc (YEDS-18).
6. Press the ▶II key 2 times.
   It will go from focus search to focus on, and CLV pull-in mode state. Tracking and sled are OFF.
7. Confirm that the waveform on oscilloscope is vertically symmetric against 0V.

Note : Take sweep time as long as possible to obtain best waveform.

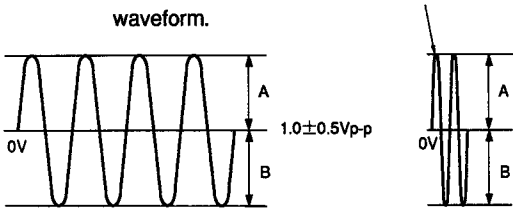

A−B=±0.1V

8. Press the ■ key.
9. After check, release service mode (see page 7).

【MAIN BOARD】 (CONDUCTOR SIDE)

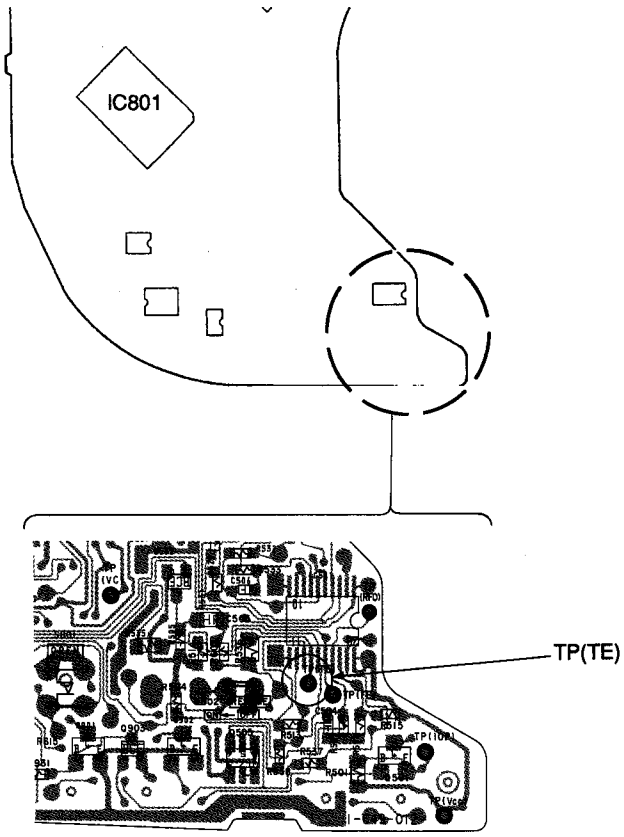

Fig. 10 Tracking Balance Check Location

Focus Bias Check

Conditions :

The set should be placed either horizontally

Check Procedure :

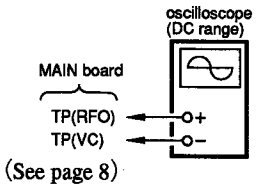

1. Put the set into STOP condition in service mode (See page 5).
2. Connect a oscilloscope to MAIN board TP (RFO).
3. Press the ▶II key 1 time.
4. Press the ▶▶I and I◀◀ keys to move the optical pick-up block to the center. (Move the optical pick-up block to the music area on the disc to enable easy visibility of the eye pattern).
5. Set the disc (YEDS-18).
6. Press the ▶II key 2 times.
   It will go from focus search to focus on, and CLV pull-in mode state. Tracking and sled are OFF.
7. Press the PLAY MODE button (Tracking and sled go ON.)
8. Confirm that clear eye patterns of waveform are generated on the oscilloscope. A good eye pattern means that the diamond shape (◇) in the center of the waveform can be clearly distinguished.

   · RF Signal Reference Waveform (eye pattern)
   VOLT/DIV : 200mV
   TIME/DIV : 500nS

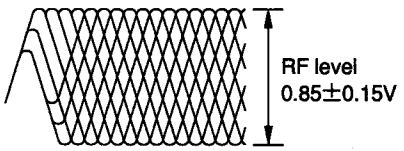

When observing the eye pattern, set the oscilloscope for AC range and raise vertical sensitivity.

9. After check, release service mode (se page 7).

Check Location : MAIN board (CONDUCTOR SIDE)

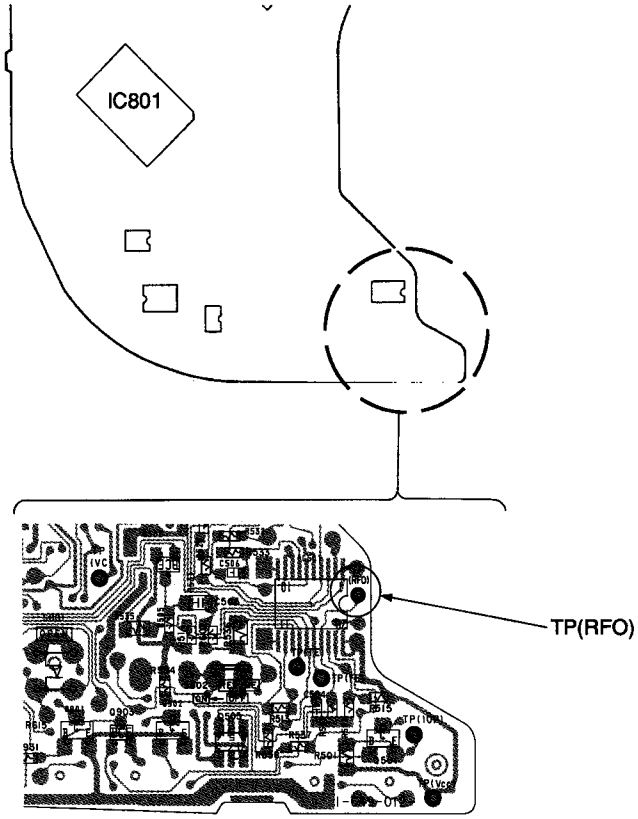

Fig. 11 Focus Bias Check Location

SECTION 4
DIAGRAMS

4-1. IC PIN FUNCTION DESCRIPTION

·IC801 CXP83916-603Q SYSTEM CONTROL IC

Pin No.	Name	I/O	Description
1	WP	I	System stop status reset signal. Stop status is reset at falling edge of input signal.
2	OPEN	I	Door switch signal. Stop status is reset at rising edge of input signal. "H" : OPEN, "L" : CLOSE
3	RMC	I	Infrared remote control signal
4	VCCADJ	O	PWM output for servo power supply adjustment. Approx. 2kHz
5	BEEP	O	Pulse signal output at BEEP sound
6	SENS	I	Input pin of CXD2515Q SENS signal output
7	SCLK	O	Clock signal output for CXD2515Q SENS serial data reading
11	SQCK	O	Clock output pin for input of SUB-Q signal from CXD2515Q
12	SUBQ	I	SUB-Q signal input from CXD2515Q
15	XLDON	O	Laser diode control output. "L" : ON, "H" : OFF
16	MIRR	I	Input pin of CXD2515Q MIRR signal output
18	TEST	I	Test mode selected by input of "L" level at the system reset
20	XRST	O	RESET signal output to CXD2515Q, RF5C241 and SM5853BF. Each IC is reset by output of "L" level.
21	PCON	O	Power supply control signal. "L" : POWER ON, "H" : POWER OFF
22	XRSM	I	RESUME switch input. "L" : RESUME ON, "H" : RESUME OFF
23	XHOLD	I	HOLD switch input. "L" : HOLD ON, "H" : HOLD OFF (reset)
24	XDCIN	I	DC-IN detection signal input. "L" : DC-IN detected, "H" : DC-IN not detected
25	XDM1	I	Battery (BP-DM10) connection detect switch input. "L" : Battery connected, "H" : Battery not connected
26	XORG	I	Control signal input at DSPILM and SRRILM. "L" : AMBER, "H" : GREEN
28	XCHG	O	Battery (BP-DM10) charge control signal output. "L" : Charge
29	RMDTO	O	Serial data output to LCD remote controller
30	SAFE	I	A/D input for CXD2515Q auto gain control setting
31	TCXSL	I	A/D input for model setting
32	VCCSEL	I	A/D input for servo system power supply voltage setting
33	CHGMNT	I	A/D input for battery (BP-DM10) charge voltage detection
34	BATT	I	A/D input for voltage detection of battery (BP-DM10/AM-3) and external power supply
35	VCCMNT	I	A/D input for servo system power supply voltage detection
36	RMKEY	I	A/D input of FR, FF, PLAY/PAUSE, DSP and STOP switches on headphone remote controller
37	KEY	I	A/D input of PLAY/PAUSE, STOP, FF, FR, REPEAT/ENTER, PLAY MODE, DSP, ESP and SURROUND switches
38	XMCRST	I	System reset signal. System is reset by input of "L" level.
39 40	XLTI1 XLTO1	—	Connection of clock oscillating circuit 4.19MHz
41	VSS	—	Ground
43	XLTI2	—	Not used (ground)
44	AVREF	—	Reference voltage input for A/D converter
45	AVSS	—	Ground of A/D converter

Pin No.	Name	I/O	Description
46	VL	O	Control signal to cut off the current flowing into external LCD bias resistor at standby
47 | 49	VLC3 | VLC1	—	LCD bias power supply voltages
50 | 53	COM0 | COM3	O	LCD remote control signals
54 | 56	S00 | S02	O	LCD segment signals
58 | 73	S03 | S18	O	LCD segment signals
74	LIGHT	O	Backlight control signal. "H" : ON
75	DSPILM	O	Color changed signal output for DSP LED XORG: H / L DSP ON: L / H DSP OFF: H / L
76	SRRILM	O	Color changed signal output for SURROUND LED XORG: H / L SURROUND ON: L / H SURROUND OFF: H / L
77	OPNILM	O	ON/OFF control signal output for OPEN LED. "L" : PLAY, "H" : STOP
80 81	SRR0 SRR1	O	SURROUND control signal output LCD DISPLAY: NONE / ((SUR)) / ((((SUR)))) SRR 0: H / L / L SRR 1: L / H / L
82	AMUT	O	Mute control signal. "H" : Mute
83	DMUT	O	SM5853BF mute control signal. "H" : Mute
85	MLEN	O	Latch signal output at serial data transfer to SM5853BF
86	CLKO	O	Serial clock to CXD2515Q and SM5853BF
87	DATO	O	Serial data to CXD2515Q and SM5853BF
88	X2515LT	O	Latch signal output at serial data transfer to CXD2515Q
89	VDD	—	Power supply
90	NC	—	Not used (connect to VDD)
91	VSS	—	Ground
93	TEX	—	Not used (ground)
94	TRVCNT	O	LPF switch for tracking balance adjustment. "H" : LPF ON
95 | 98	TRV0 | TRV3	O	Resistor selection switch for tracking balance adjustment. "H" : Select
99	SCOR	I	Input pin of CXD2515Q SCOR signal output
100	RMCKI	I	Input of clock signal (for data output) from LCD remote controller. Data is updated by detection of falling edge.

IC301 SM5853BF-EL

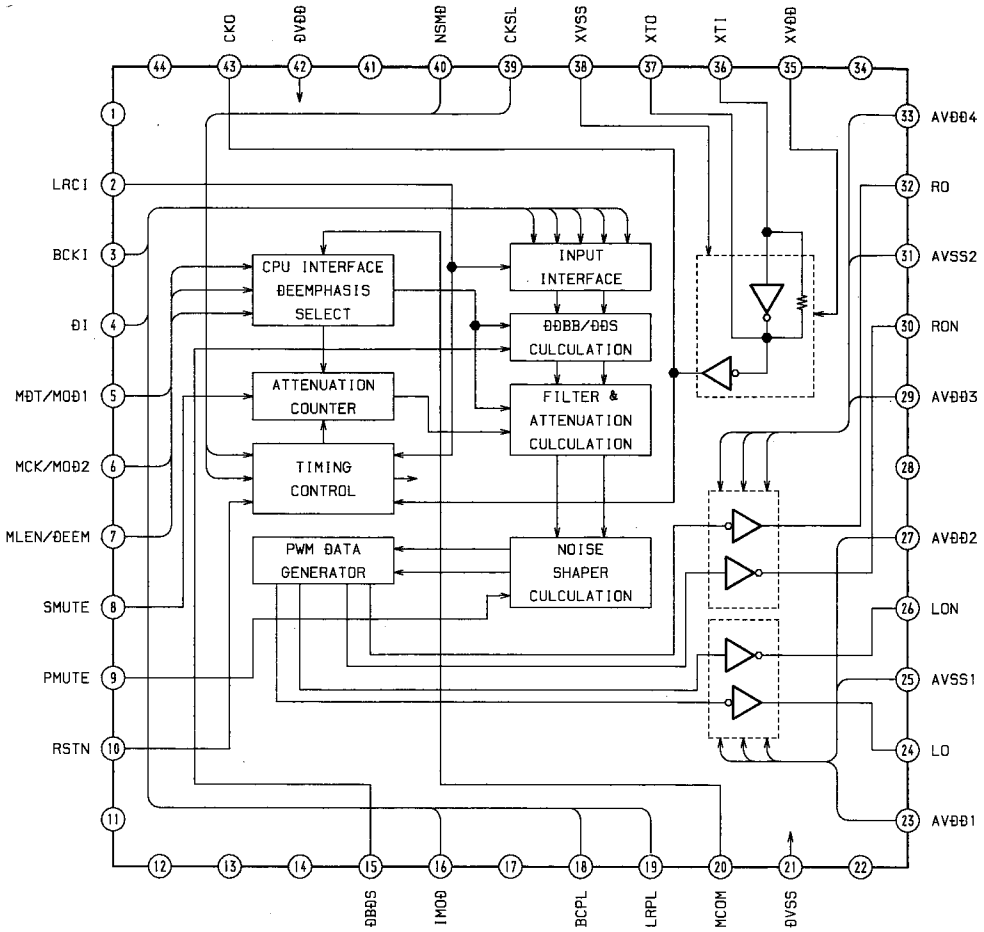

IC304 LA4534M

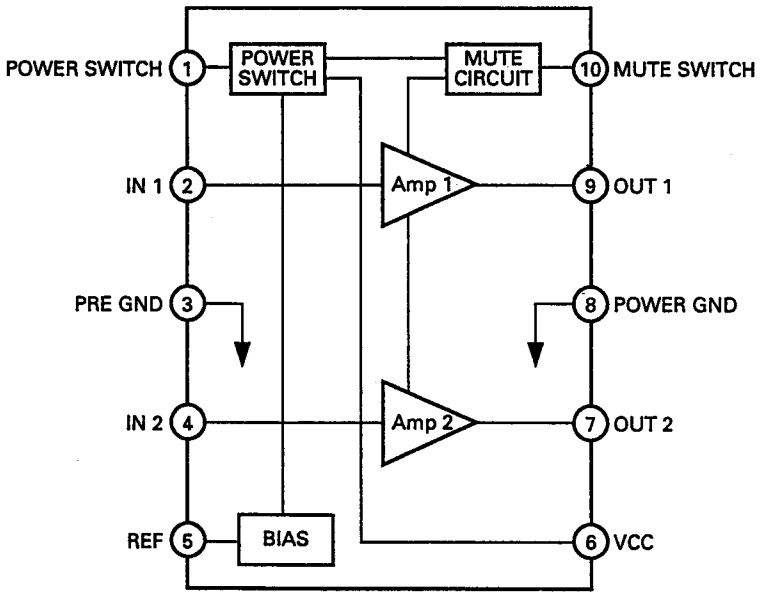

IC401 MB3776APNF-G-SNY-ER

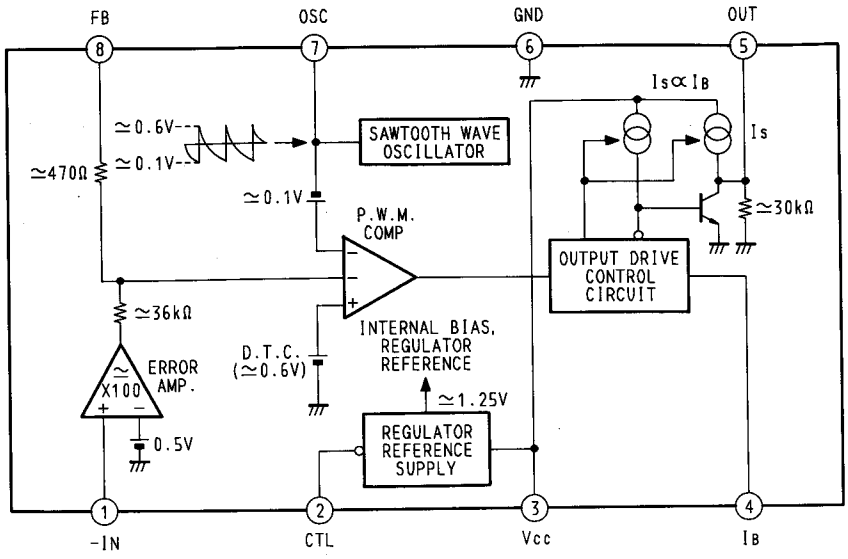

IC402 RS5RJ32271-T1

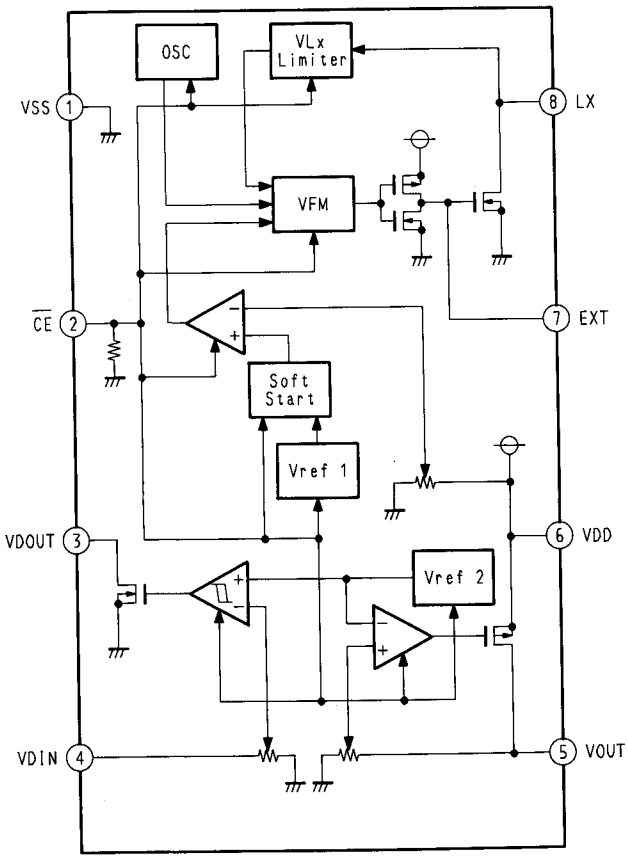

IC501 CXA1571N

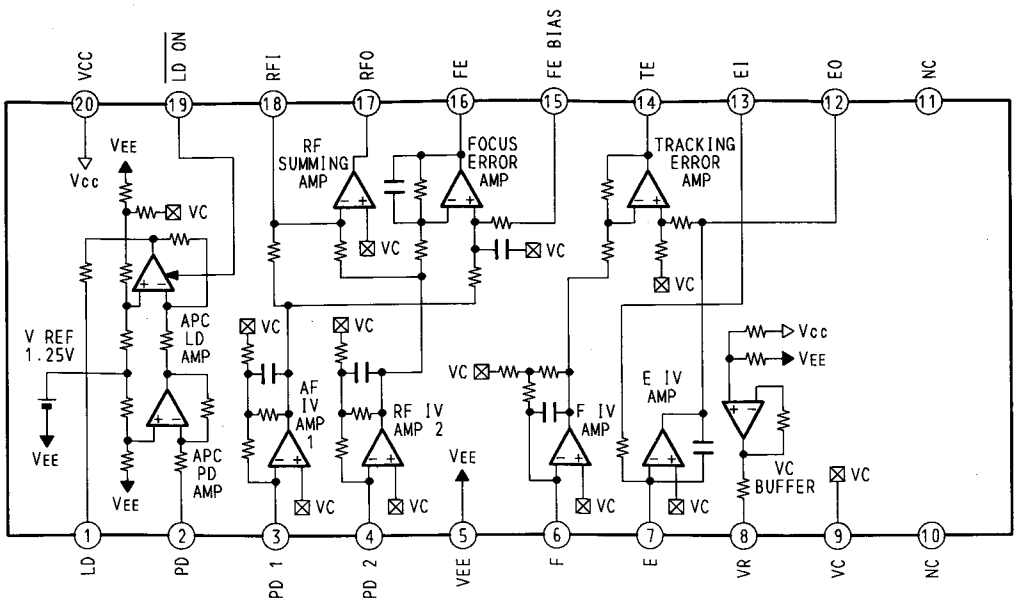

IC502 MPC17A38VMEL

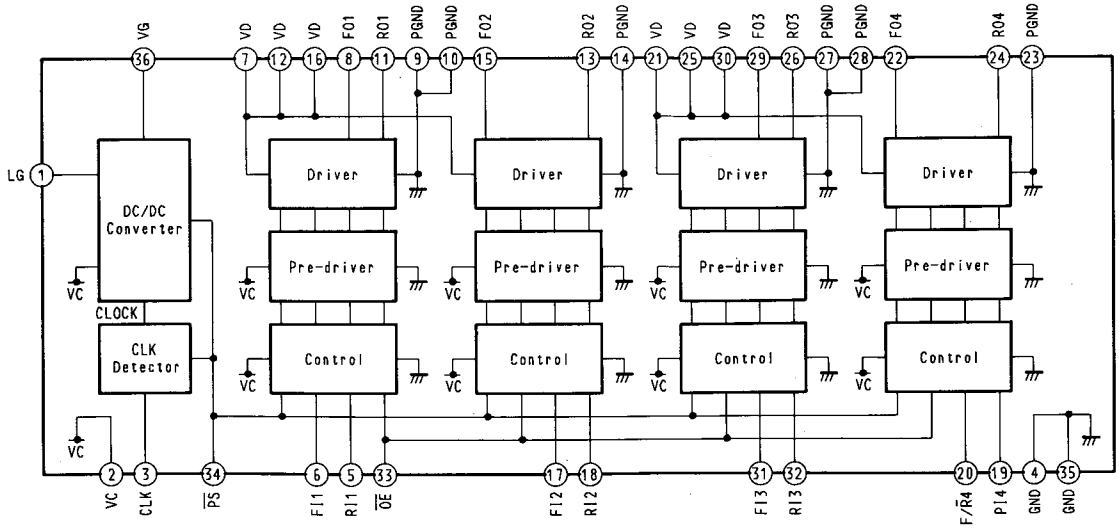

IC601 CXD2515Q

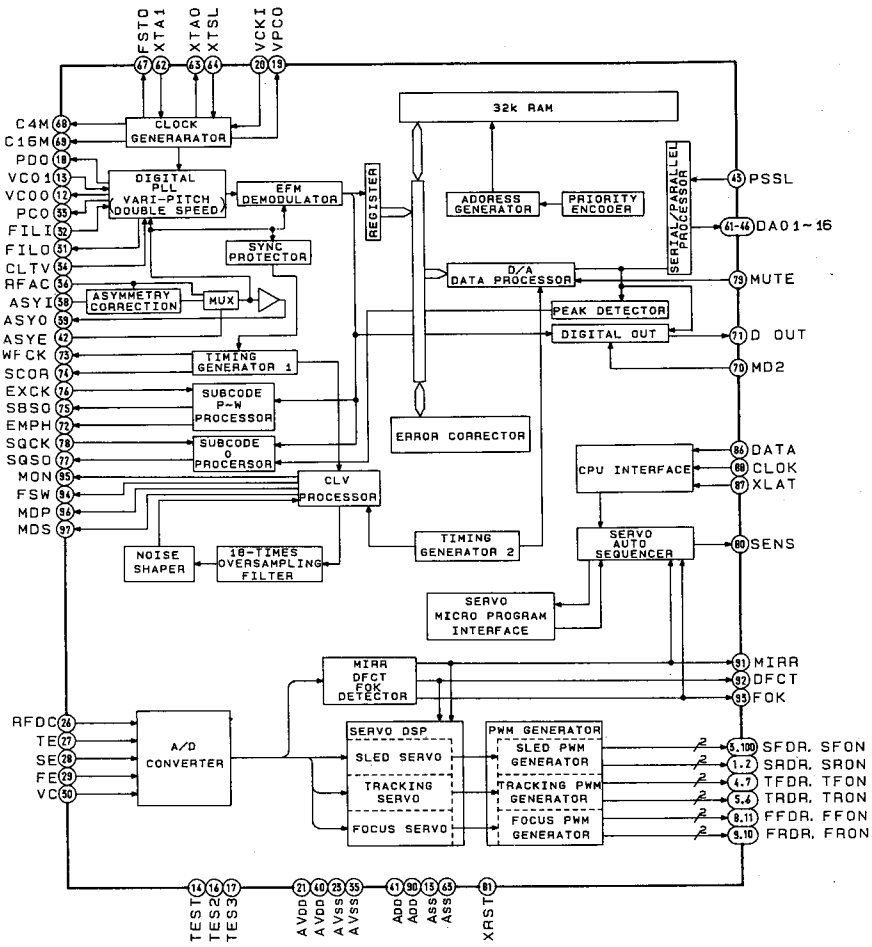

IC605 BA3890F

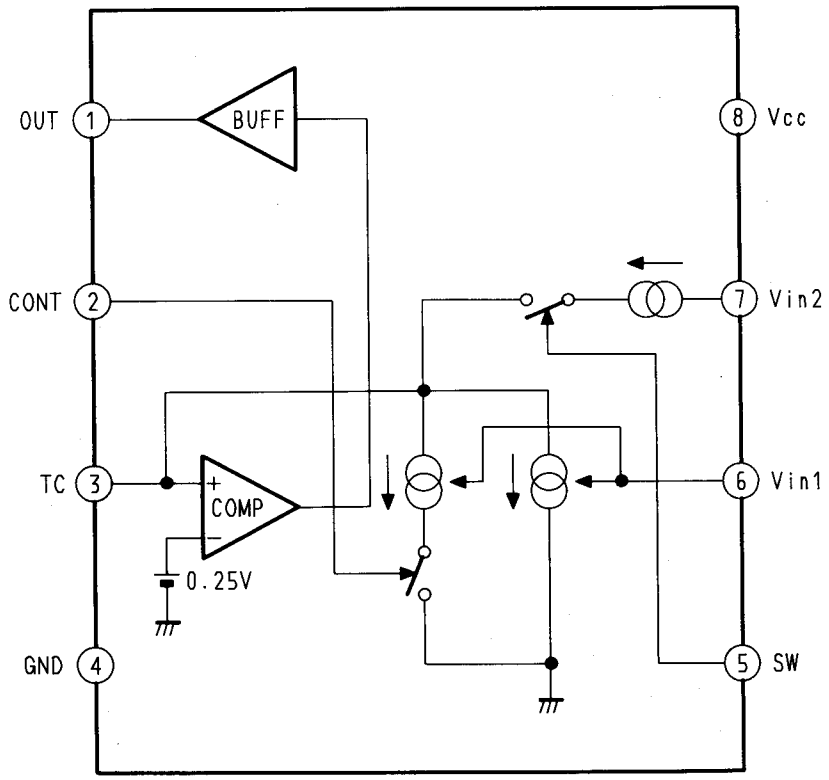

IC606 TLC2931IDB-ELL1000

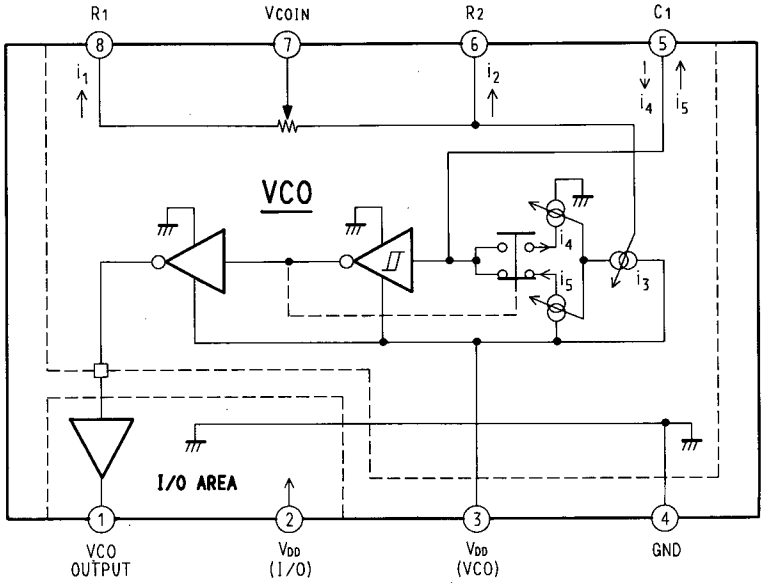

SECTION 5
EXPLODED VIEWS

NOTE:
- -xx,-x mean standardized parts, so they may have some differences from the original one.
- Color Indication of Appearance Parts
  Example:
  KNOB, BALANCE (WHITE)...(RED)
  ↑ Parts color ↑ Cabinet's color
- Items marked "*" are not stocked since they are seldom required for routine service. Some delay should be anticipated when ordering these items.
- The mechanical parts with no reference number in the exploded views are not supplied.
- Hardware (#mark) list is given in the last of this parts list.
- Abbreviation JE : Tourist

The components identified by mark ⚠ or dotted line with mark. ⚠ are critical for safety.
Replace only with part number specified.

Les components identifiés par une marque ⚠ sont critiques pour la sécurité.
Ne les remplacer que par une pièc portant le numéro spéccifié.

5-1. CABINET SECTION 1

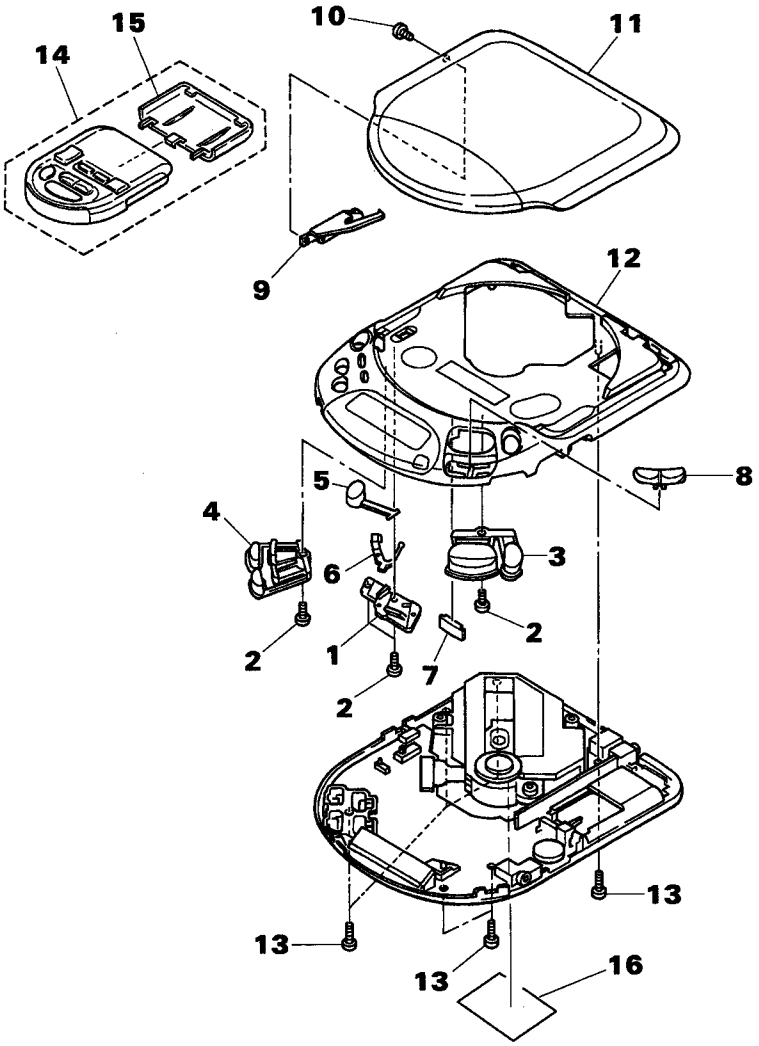

Ref.No.	Part No.	Description	Remark
1	4-959-436-01	RETAINER (OPEN)	
2	3-374-079-11	SCREW (1.7X5), TAPPING	
3	4-959-429-01	BUTTON (PLAY)	
4	4-959-416-01	BUTTON (MODE)	
5	4-959-433-01	BUTTON (OPEN)	
6	4-959-435-01	CLAW, LOCK	
7	4-959-417-01	LENS	
8	4-959-438-01	BUTTON (FR)	
9	X-4943-816-1	ARM ASSY, SWITCHING	
10	3-704-197-32	SCREW (M1.4X3.0)	
11	4-959-444-11	LID, UPPER	
12	X-4943-833-1	CABINET (UPPER) ASSY	
13	3-336-395-01	SCREW (B2X10) (G), TAPPING	
14	1-467-210-11	REMOTE COMMANDER (RM-DM10)	
15	4-961-140-01	LID, BUTTERY CASE (RM-DM10)	
*16	3-703-034-01	LABEL, CAUTION (JE)	

5-2. CABINET SECTION 2

Note:

For the US model only, there are two kinds of last codes -11 and -12 assigned to the MAIN board. For last code -11, JT and SK boards are attached. For last code -12, only one MAIN board is mounted.

US-11: MAIN, JT and SK boards

US-12: MAIN board

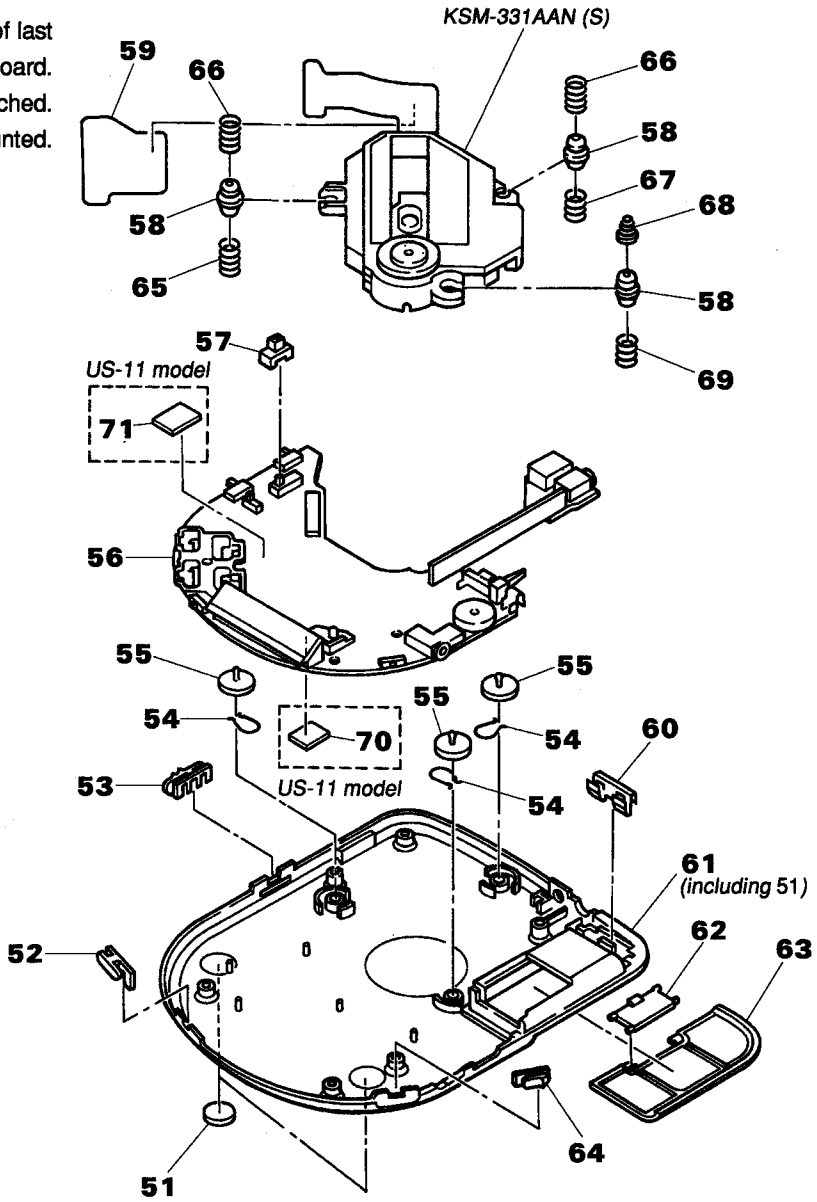

Ref.No.	Part No.	Description	Remark
51	4-912-641-01	FOOT, RUBBER	
52	4-959-439-01	KNOB (HOLD)	
53	4-959-431-01	KNOB (IRUMI)	
54	4-959-428-01	SPRING (BUSHING)	
55	4-959-418-01	BUSHING	
56	A-3264-580-A	MAIN BOARD, COMPLETE	
57	4-959-434-01	KNOB (RESUME)	
58	4-959-412-01	INSULATOR, OIL	
*59	4-956-818-01	RETAINER, FLEXIBLE	
60	4-959-419-01	TERMINAL BOARD (RELAY), BATTERY	
61	X-4943-928-1	CABINET (LOWER) ASSY	

Ref.No.	Part No.	Description	Remark
62	4-959-414-01	HINGE, BATTERY	
63	4-959-413-11	LID, BATTERY CASE	
64	4-959-437-01	KNOB (AVLS)	
65	4-959-425-11	SPRING, COMPRESSION	
66	4-961-119-01	SPRING (B) (UPPER), COIL	
67	4-959-425-01	SPRING, COMPRESSION	
68	4-961-118-01	SPRING (A) (UPPER), COIL	
69	4-959-424-01	SPRING, COMPRESSION	
70	1-649-727-11	SK BOARD, (US-11)	
71	1-649-598-11	JT BOARD, (US-11)	

5-3. OPTICAL PICK-UP BLOCK SECTION (KSM-331AAN (S))

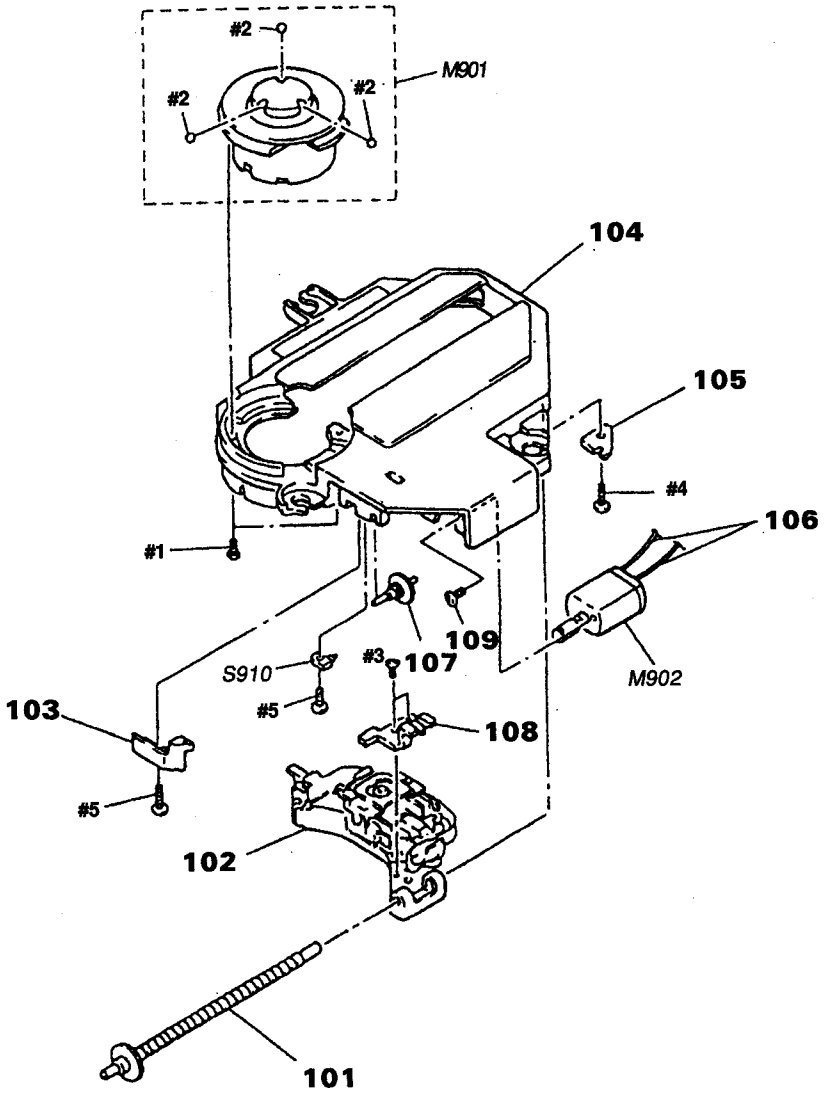

The components identified by mark ⚠ or dotted line with mark. ⚠ are critical for safety. Replace only with part number specified.	Les components identifiés par une marque ⚠ sont critiques pour la sécurité. Ne les remplacer que par une pièc portant le numéro spéccifié.

Ref.No.	Part No.	Description	Remark
101	X-2625-483-1	SCREW ASSY, SLED	
⚠102	8-848-289-21	DEVICE, OPTICAL KSS-331A	
103	2-625-412-02	SPRING, SLED	
104	2-625-415-02	CHASSIS, MD	
105	2-625-411-01	RETAINER, SHAFT	
106	1-948-418-21	HARNESS	
107	2-625-410-01	GEAR (B)	
108	2-625-414-02	RACK	
109	3-732-988-01	SCREW (M2X2.5)	
M901	X-2625-485-1	MOTOR ASSY, T.T.	
M902	X-2625-171-2	MOTOR ASSY, SLED	
S910	1-570-771-11	SWITCH (LIMI SW)	

5-4. CAR MOUNT SECTION (CPM-302P) (Tourist model)

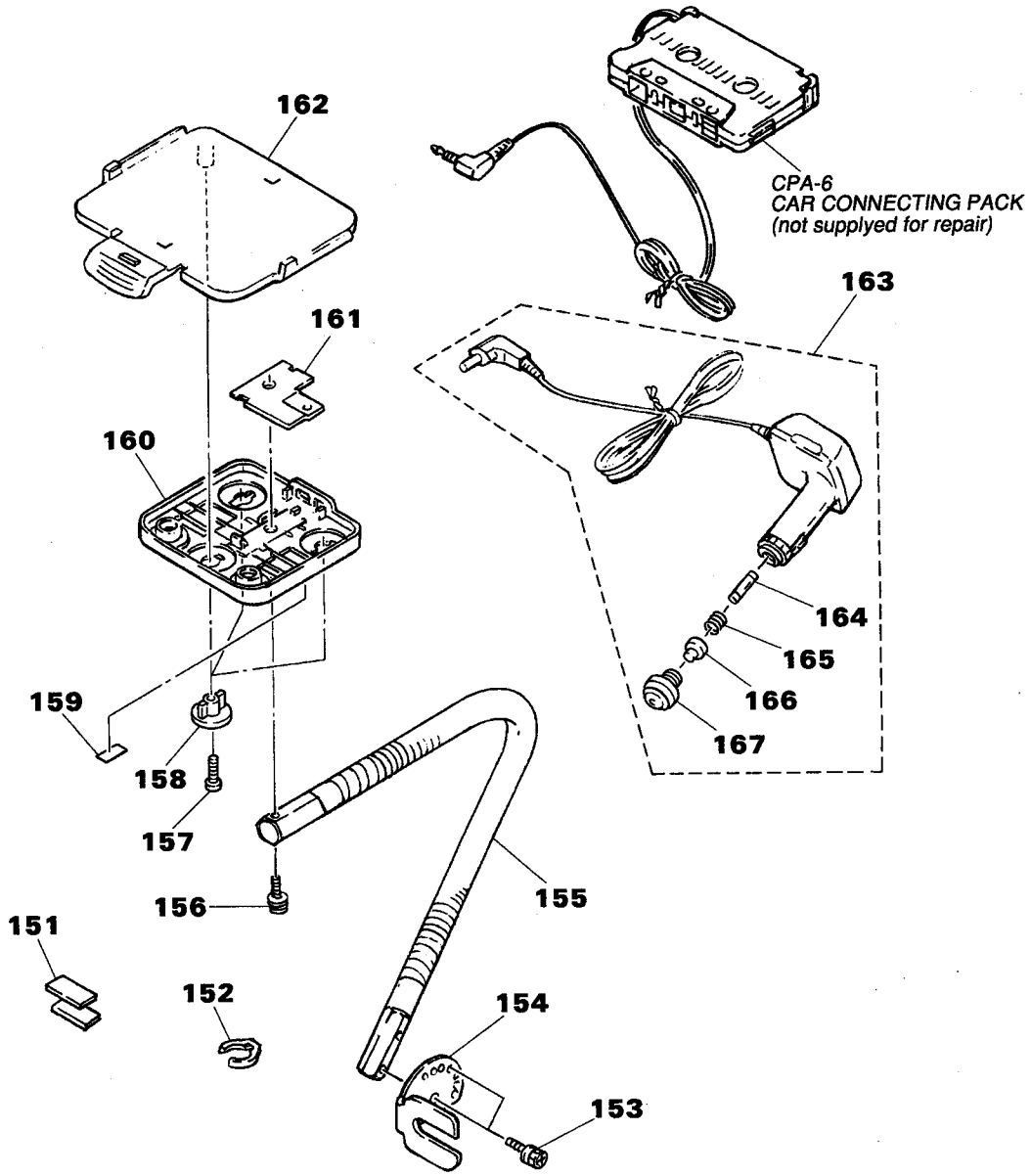

Ref.No.	Part No.	Description	Remark
151	2-201-810-00	TAPE, MAGIC	
152	2-120-534-01	CLAMP, CORD	
153	7-683-323-07	BOLT, HEXAGON	
154	2-120-542-01	BRACKET, BASE	
155	X-4943-745-1	PIPE ASSY, FLEXIBLE	
156	7-682-665-09	SCREW +PS 4X16	
157	7-685-547-19	SCREW +BTP 3X10 TYPE2 N-S	
158	4-947-605-01	BRACKET (LOWER)	
159	3-704-222-11	LABEL, SERIAL NUMBER	

Ref.No.	Part No.	Description	Remark
160	4-958-719-11	PLATE, BOTTOM	
161	4-958-716-01	HEAT SINK	
162	4-959-655-01	CABINET	
163	1-751-087-11	CORD, CAR BATTERY (DCC-E455)	
164	1-532-360-XX	FUSE (125V/1A)	
165	4-950-263-01	SPRING	
166	4-950-277-01	CHIP	
167	4-950-259-01	CAP	

SECTION 6
ELECTRICAL PARTS LIST

JT **MAIN** **CN** **JACK**

NOTE:
- Due to standardization, replacements in the parts list may be different from the parts specified in the diagrams or the components used on the set.
- -XX and -X mean standardized parts, so they may have some difference from the original one.
- RESISTORS
  All resistors are in ohms.
  METAL: Metal-film resistor.
  METAL OXIDE: Metal oxide-film resistor.
  F: nonflammable
- Items marked "*" are not stocked since they are seldom required for routine service. Some delay should be anticipated when ordering these items.
- SEMICONDUCTORS
  In each case, u : μ, for example:
  uA··· : μA···, uPA··· : μPA···,
  uPB··· : μPB···, uPC··· : μPC···, uPD··· : μPD···
- CAPACITORS
  uF : μF
- COILS
  uH : μH
- Abbreviations

When indicating parts by reference number, please include the board.

AEC: Netherlands, North European, Spanish, Belgium, Polan
AEL: French, Austrian, East European, Swiss, Italian, German
AUS: Australian
EA: Saudi Arabia
JE: Tourist

The components identified by mark ⚠ or dotted line with mark. ⚠ are critical for safety.
Replace only with part number specified.

Les components identifiés par une marque ⚠ sont critiques pour la sécurité.
Ne les remplacer que par une pièc portant le numéro spéccifié.

NOTE:
For the US model only, there are two kinds of last codes -11 and -12 assigned to the MAIN board.
For last code -11, JT and SK boards are attached.
For last code -12, only one MAIN board is mounted.
US-11: MAIN, JT and SK boards
US-12: MAIN board

Ref.No.	Part No.	Description			Remark
*	1-649-598-11	JT BOARD (US-11)			
		**********			
		< CAPACITOR >			
C532	1-164-346-11	CERAMIC CHIP	1uF		16V
		< DIODE >			
D501	8-719-938-72	DIODE SB01-05CP			
		< COIL >			
L521	1-412-034-11	INDUCTOR CHIP	330uH		
**********					
	A-3264-580-A	MAIN BOARD, COMPLETE			
		**********			
		CN BOARD			
		********			
		JACK BOARD			
		**********			
	X-4943-819-1	TERMINAL ASSY, BATTERY			
	4-959-421-01	TERMINAL BOARD (+), BATTERY			
	4-959-423-01	PLATE (LCD), LIGHT GUIDE			
	4-959-430-01	HOLDER (LCD)			
		< CAPACITOR >			
C101	1-164-816-11	CERAMIC CHIP	220PF	2%	50V
C102	1-162-928-11	CERAMIC CHIP	120PF	5%	50V
C103	1-162-928-11	CERAMIC CHIP	120PF	5%	50V
C104	1-162-924-11	CERAMIC CHIP	56PF	5%	50V
C105	1-162-924-11	CERAMIC CHIP	56PF	5%	50V
C106	1-135-181-21	TANTALUM CHIP	4.7uF	20%	6.3V
C107	1-163-275-11	CERAMIC CHIP	0.001uF	5%	50V
C108	1-164-156-11	CERAMIC CHIP	0.1uF		25V
C109	1-162-945-11	CERAMIC CHIP	22PF	5%	50V
C112	1-162-953-11	CERAMIC CHIP	100PF	5%	50V
C114	1-126-608-11	ELECT	330uF	20%	2V
C115	1-164-156-11	CERAMIC CHIP	0.1uF		25V
C116	1-163-275-11	CERAMIC CHIP	0.001uF	5%	50V
C201	1-164-816-11	CERAMIC CHIP	220PF	2%	50V
C202	1-162-928-11	CERAMIC CHIP	120PF	5%	50V
C203	1-162-928-11	CERAMIC CHIP	120PF	5%	50V
C204	1-162-924-11	CERAMIC CHIP	56PF	5%	50V
C205	1-162-924-11	CERAMIC CHIP	56PF	5%	50V
C206	1-135-181-21	TANTALUM CHIP	4.7uF	20%	6.3V
C207	1-163-275-11	CERAMIC CHIP	0.001uF	5%	50V
C208	1-164-156-11	CERAMIC CHIP	0.1uF		25V
C209	1-162-945-11	CERAMIC CHIP	22PF	5%	50V
C212	1-162-953-11	CERAMIC CHIP	100PF	5%	50V
C213	1-162-953-11	CERAMIC CHIP	100PF	5%	50V
C214	1-126-608-11	ELECT	330uF	20%	2V
C215	1-164-156-11	CERAMIC CHIP	0.1uF		25V
C216	1-163-275-11	CERAMIC CHIP	0.001uF	5%	50V
C301	1-162-919-11	CERAMIC CHIP	22PF	5%	50V
C302	1-162-921-11	CERAMIC CHIP	33PF	5%	50V
C303	1-164-234-11	CERAMIC CHIP	1uF		10V
C304	1-126-207-11	ELECT CHIP	33uF	20%	4V
C305	1-164-156-11	CERAMIC CHIP	0.1uF		25V
C307	1-104-847-91	TANTAL. CHIP	22uF	20%	4V
C309	1-162-953-11	CERAMIC CHIP	100PF	5%	50V
C310	1-162-953-11	CERAMIC CHIP	100PF	5%	50V
C311	1-162-964-11	CERAMIC CHIP	0.001uF	10%	50V
C312	1-104-908-91	TANTALUM CHIP	47uF	20%	4V
C313	1-164-156-11	CERAMIC CHIP	0.1uF		25V
C320	1-162-970-11	CERAMIC CHIP	0.01uF	10%	25V
C321	1-135-181-21	TANTALUM CHIP	4.7uF	20%	6.3V
C322	1-135-317-11	TANTAL. CHIP	33uF	20%	2.5V
C330	1-164-234-11	CERAMIC CHIP	1uF		10V
C331	1-104-847-91	TANTAL. CHIP	22uF	20%	4V
C332	1-164-234-11	CERAMIC CHIP	1uF		10V
C333	1-104-847-91	TANTAL. CHIP	22uF	20%	4V
C336	1-104-847-91	TANTAL. CHIP	22uF	20%	4V
C337	1-162-953-11	CERAMIC CHIP	100PF	5%	50V
C350	1-164-005-11	CERAMIC CHIP	0.47uF		25V
C351	1-164-005-11	CERAMIC CHIP	0.47uF		25V
C352	1-135-210-11	TANTAL. CHIP	4.7uF	20%	10V(EXCEPT US-11)
C353	1-164-156-11	CERAMIC CHIP	0.1uF		25V
C354	1-164-234-11	CERAMIC CHIP	1uF		10V

Ref.No.	Part No.	Description			Remark
C355	1-164-234-11	CERAMIC CHIP	1uF		10V
C356	1-164-234-11	CERAMIC CHIP	1uF		10V
C357	1-164-234-11	CERAMIC CHIP	1uF		10V
C358	1-164-156-11	CERAMIC CHIP	0.1uF		25V
C401	1-135-091-91	TANTAL. CHIP	1uF	20%	16V
C402	1-164-357-11	CERAMIC CHIP	1000PF	5%	50V
C403	1-162-949-11	CERAMIC CHIP	47PF	5%	50V
C404	1-163-038-00	CERAMIC CHIP	0.1uF		25V
C405	1-164-373-11	CERAMIC CHIP	0.033uF		25V
C406	1-104-908-91	TANTAL. CHIP	47uF	20%	4V
C407	1-104-851-91	TANTAL. CHIP	10uF	20%	10V
C408	1-104-851-91	TANTAL. CHIP	10uF	20%	10V
C409	1-104-851-91	TANTAL. CHIP	10uF	20%	10V
C410	1-162-974-11	CERAMIC CHIP	0.01uF		50V
C411	1-127-561-11	ELECT(SOLID)	33uF	20%	10V
C413	1-104-847-91	TANTAL. CHIP	22uF	20%	4V
C421	1-164-156-11	CERAMIC CHIP	0.1uF		25V
C422	1-164-373-11	CERAMIC CHIP	0.033uF		25V
C423	1-162-969-11	CERAMIC CHIP	0.0068uF	10%	25V
C425	1-162-974-11	CERAMIC CHIP	0.01uF		50V
C426	1-162-974-11	CERAMIC CHIP	0.01uF		50V
C427	1-164-156-11	CERAMIC CHIP	0.1uF		25V
C428	1-162-974-11	CERAMIC CHIP	0.01uF		50V
C450	1-164-156-11	CERAMIC CHIP	0.1uF		25V
C451	1-164-156-11	CERAMIC CHIP	0.1uF		25V
C452	1-104-847-91	TANTAL. CHIP	22uF	20%	4V(EXCEPT US-11)
C501	1-135-317-11	TANTAL. CHIP	33uF	20%	2.5V
C503	1-164-156-11	CERAMIC CHIP	0.1uF		25V
C504	1-162-917-11	CERAMIC CHIP	15PF	5%	50V
C505	1-164-344-11	CERAMIC CHIP	0.068uF	10%	25V
C506	1-162-941-11	CERAMIC CHIP	10PF	0.5PF	50V
C507	1-104-847-91	TANTAL. CHIP	22uF	20%	4V
C510	1-104-908-91	TANTAL. CHIP	47uF	20%	4V
C520	1-164-156-11	CERAMIC CHIP	0.1uF		25V
C529	1-104-852-91	TANTAL. CHIP	22uF	20%	10V
C530	1-126-530-11	ELECT	22uF	20%	10V
C531	1-126-530-11	ELECT	22uF	20%	10V
C532	1-164-346-11	CERAMIC CHIP	1uF	16V	(EXCEPT US-11)
C533	1-162-974-11	CERAMIC CHIP	0.01uF		50V
C601	1-164-362-11	CERAMIC CHIP	470PF	5%	50V
C602	1-164-473-11	CERAMIC CHIP	820PF	5%	50V
C603	1-164-156-11	CERAMIC CHIP	0.1uF		25V
C604	1-164-361-11	CERAMIC CHIP	0.047uF		16V
C605	1-162-965-11	CERAMIC CHIP	0.0015uF	10%	50V
C606	1-162-953-11	CERAMIC CHIP	100PF	5%	50V
C607	1-135-145-11	TANTALUM CHIP	0.47uF	10%	35V
C609	1-162-953-11	CERAMIC CHIP	100PF	5%	50V
C610	1-162-953-11	CERAMIC CHIP	100PF	5%	50V
C611	1-162-974-11	CERAMIC CHIP	0.01uF		50V
C612	1-164-156-11	CERAMIC CHIP	0.1uF		25V
C630	1-163-038-00	CERAMIC CHIP	0.1uF		25V
C650	1-104-848-91	TANTAL. CHIP	100uF	20%	4V
C652	1-164-217-11	CERAMIC CHIP	150PF	5%	50V
C653	1-135-149-21	TANTALUM CHIP	2.2uF	20%	10V
C654	1-162-927-11	CERAMIC CHIP	100PF	5%	50V
C655	1-162-953-11	CERAMIC CHIP	100PF	5%	50V
C656	1-164-234-11	CERAMIC CHIP	1uF		10V
C657	1-164-373-11	CERAMIC CHIP	0.033uF		25V
C658	1-162-965-11	CERAMIC CHIP	0.0015uF	10%	50V
C801	1-135-181-21	TANTALUM CHIP	4.7uF	20%	6.3V
C802	1-162-971-11	CERAMIC CHIP	0.001uF		50V
C803	1-162-971-11	CERAMIC CHIP	0.001uF		50V
C804	1-162-971-11	CERAMIC CHIP	0.001uF		50V
C807	1-164-156-11	CERAMIC CHIP	0.1uF		25V
C832	1-164-234-11	CERAMIC CHIP	1uF		10V
C834	1-164-156-11	CERAMIC CHIP	0.1uF		25V
C835	1-164-156-11	CERAMIC CHIP	0.1uF		25V
C836	1-162-974-11	CERAMIC CHIP	0.01uF		50V
C837	1-162-945-11	CERAMIC CHIP	22PF	5%	50V
C838	1-164-373-11	CERAMIC CHIP	0.033uF		25V
C901	1-162-971-11	CERAMIC CHIP	0.001uF		50V

< CONNECTOR >

CN402	1-568-330-11	CONNECTOR, BOARD TO BOARD 6P	
CN403	1-568-330-11	CONNECTOR, BOARD TO BOARD 6P	
CN404	1-568-362-11	CONNECTOR, BOARD TO BOARD 6P	
CN405	1-568-362-11	CONNECTOR, BOARD TO BOARD 6P	
CN501	1-566-534-11	CONNECTOR, FPC (ZIF) 18P	
* CN502	1-695-320-11	PIN, CONNECTOR (1.5MM)(SMD) 2P	
* CN503	1-695-320-31	PIN, CONNECTOR (1.5MM)(SMD) 2P	
* CN504	1-695-320-51	PIN, CONNECTOR (1.5MM)(SMD) 2P	

< JACK >

CNJ401	1-568-907-21	JACK,DC(POLARITY UNIFIED TYPE)	(DC IN 4.5V)

< DIODE >

D101	8-719-040-00	DIODE	UMZ8.2T-T106
D102	8-719-040-00	DIODE	UMZ8.2T-T106
D201	8-719-040-00	DIODE	UMZ8.2T-T106
D202	8-719-040-00	DIODE	UMZ8.2T-T106
D301	8-719-023-69	DIODE	SB007T03Q
D303	8-719-941-23	DIODE	DA204U
D350	8-719-988-78	DIODE	SB007W03Q
D401	8-719-938-72	DIODE	SB01-05CP
D402	8-719-988-78	DIODE	SB007W03Q

MAIN CN JACK

Ref.No.	Part No.	Description	Remark
D403	8-719-938-72	DIODE SB01-05CP	
D404	8-719-975-33	DIODE RB110C	
D405	8-719-938-75	DIODE SB05-05CP	
D501	8-719-938-72	DIODE SB01-05CP (EXCEPT US-11)	
D601	8-719-977-12	DIODE MA8068	
D801	8-719-404-46	DIODE MA110	
D802	8-719-941-86	DIODE DAN202U	
D803	8-719-404-46	DIODE MA110	
D804	8-719-800-76	DIODE 1SS226	
D805	8-719-977-12	DIODE MA8068	
D806	8-719-105-91	DIODE RD5.6M-B2	
D807	8-719-975-33	DIODE RB110C	
D808	8-719-421-27	DIODE MA728 (EXCEPT US-11)	
D809	8-719-404-46	DIODE MA110 (EXCEPT US-11)	
D901	8-719-987-45	LED CL-155Y/PG-CD(■STOP/DISPLAY OFF)	
D902	8-719-987-45	LED CL-155Y/PG-CD (⏭)	
D903	8-719-987-45	LED CL-155Y/PG-CD (⏮)	
D904	8-719-987-45	LED CL-155Y/PG-CD (❚❚)	
D905	8-719-987-45	LED CL-155Y/PG-CD (▶)	
D906	8-719-987-45	LED CL-155Y/PG-CD (LCD BACK LIGHT)	
D907	8-719-987-45	LED CL-155Y/PG-CD (LCD BACK LIGHT)	
D908	8-719-987-45	LED CL-155Y/PG-CD (LCD BACK LIGHT)	
D909	8-719-987-45	LED CL-155Y/PG-CD (LCD BACK LIGHT)	
D910	8-719-987-45	LED CL-155Y/PG-CD (LCD BACK LIGHT)	
D911	8-719-987-45	LED CL-155Y/PG-CD (REPEAT/ENTER)	
D912	8-719-987-45	LED CL-155Y/PG-CD (PLAY MODE)	
D913	8-719-987-45	LED CL-155Y/PG-CD (DSP)	
D914	8-719-987-45	LED CL-155Y/PG-CD (SURROUND)	
D915	8-719-987-45	LED CL-155Y/PG-CD (OPEN)	
D916	8-719-987-45	LED CL-155Y/PG-CD (OPEN)	
D939	8-719-420-51	DIODE MA729	
		< IC >	
IC301	8-759-177-68	IC SM5853BF-EL	
IC302	8-759-177-70	IC TLV2362IDB-ELL1000	
IC303	8-759-161-75	IC NJM2112V(TE2)	
IC304	8-759-048-93	IC LA4534M	
IC401	8-759-097-95	IC MB3776APNF-G-SNY-ER	
IC402	8-759-176-73	IC RS5RJ32271-T1	
IC403	8-759-177-70	IC TLV2362IDB-ELL1000	
IC501	8-752-059-39	IC CXA1571N	
IC502	8-759-179-60	IC MPC17A38VMEL	
IC601	8-752-351-94	IC CXD2515Q	
IC605	8-759-179-64	IC BA3890F	
IC606	8-759-177-71	IC TLC2931IDB-ELL1000	
IC801	8-752-845-09	IC CXP83916-603Q	
IC802	8-749-923-29	IC RS-20E-T	

Ref.No.	Part No.	Description	Remark
		< JACK >	
J301	1-565-287-41	JACK (LINE OUT)	
J302	1-580-680-11	JACK (Ω/REMOTE)	
		< JUMPER RESISTOR >	
JR610	1-216-864-11	METAL CHIP 0 5% 1/16W	
JR625	1-216-864-11	METAL CHIP 0 5% 1/16W	
JR626	1-216-864-11	METAL CHIP 0 5% 1/16W	
JR627	1-216-864-11	METAL CHIP 0 5% 1/16W	
		< COIL >	
L101	1-414-135-11	INDUCTOR CHIP BLM21A10	
L105	1-414-135-11	INDUCTOR CHIP BLM21A10	
L201	1-414-135-11	INDUCTOR CHIP BLM21A10	
L205	1-414-135-11	INDUCTOR CHIP BLM21A10	
L301	1-414-135-11	INDUCTOR CHIP BLM21A10	
L302	1-414-135-11	INDUCTOR CHIP BLM21A10	
L303	1-414-135-11	INDUCTOR CHIP BLM21A10	
L304	1-414-135-11	INDUCTOR CHIP BLM21A10	
L305	1-414-135-11	INDUCTOR CHIP BLM21A10	
L306	1-414-135-11	INDUCTOR CHIP BLM21A10	
L401	1-423-636-11	TRANSFORMER, DC-DC CONVERTER	
L402	1-412-622-51	INDUCTOR 10uH	
L403	1-412-630-51	INDUCTOR 47uH	
L404	1-412-029-11	INDUCTOR CHIP 10uH	
L405	1-412-029-11	INDUCTOR CHIP 10uH	
L501	1-412-029-11	INDUCTOR CHIP 10uH	
L521	1-412-034-11	INDUCTOR CHIP 330uH (EXCEPT US-11)	
L530	1-412-039-51	INDUCTOR CHIP 100uH	
L531	1-412-244-31	INDUCTOR 150uH	
L532	1-412-039-51	INDUCTOR CHIP 100uH	
L603	1-414-135-11	INDUCTOR CHIP BLM21A10	
L604	1-414-135-11	INDUCTOR CHIP BLM21A10	
		< LIQUID CRYSTAL DISPLAY >	
LCD801	1-810-190-11	LCD	
		< PILOT LAMP >	
PL901	1-518-259-00	LAMP,PILOT	
		< TRANSISTOR >	
Q301	8-729-425-18	TRANSISTOR XN4504	
Q302	8-729-422-39	TRANSISTOR XN4404	
Q303	8-729-902-93	TRANSISTOR FMG4	
Q304	8-729-425-18	TRANSISTOR XN4504	
Q305	8-729-902-90	TRANSISTOR FMA4	
Q310	8-729-230-60	TRANSISTOR 2SA1586-YG	
Q320	8-729-231-74	TRANSISTOR 2SC4116-GL	
Q330	8-729-904-86	TRANSISTOR 2SB1197K-Q	
Q331	8-729-903-10	TRANSISTOR FMW1	

Ref.No.	Part No.	Description		Remark
Q332	8-729-141-75	TRANSISTOR	2SD596DV345	
Q350	8-729-907-39	TRANSISTOR	IMD2	
Q351	8-729-402-XX	TRANSISTOR	XN4112	
Q401	8-729-905-61	TRANSISTOR	DTC124EU	
Q403	8-729-920-56	TRANSISTOR	FMG1	
Q404	8-729-923-36	TRANSISTOR	2SD1963-Q.R	
Q405	8-729-022-67	TRANSISTOR	2SC3650-TD	
Q406	8-729-403-02	TRANSISTOR	XN4212	
Q407	8-729-905-57	TRANSISTOR	DTA124EU	
Q408	8-729-922-34	TRANSISTOR	2SD1758F5-QR	
Q409	8-729-905-57	TRANSISTOR	DTA124EU	
Q410	8-729-231-74	TRANSISTOR	2SC4116-GL	
Q421	8-729-230-60	TRANSISTOR	2SA1586-YG	
Q501	8-729-904-86	TRANSISTOR	2SB1197K-Q	
Q502	8-729-922-94	TRANSISTOR	DTC143TU	
Q503	8-729-924-79	TRANSISTOR	FMG8	
Q504	8-729-924-79	TRANSISTOR	FMG8	
Q505	8-729-907-39	TRANSISTOR	IMD2	
Q506	8-729-905-61	TRANSISTOR	DTC124EU	
Q603	8-729-231-74	TRANSISTOR	2SC4116-GL	
Q810	8-729-231-74	TRANSISTOR	2SC4116-GL	
Q811	8-729-924-04	TRANSISTOR	DTA143TU	
Q812	8-729-905-18	TRANSISTOR	DTC144EU (EXCEPT US-11)	
Q901	8-729-141-75	TRANSISTOR	2SD596DV345	
Q902	8-729-141-75	TRANSISTOR	2SD596DV345	
Q903	8-729-905-61	TRANSISTOR	DTC124EU	
Q904	8-729-806-75	TRANSISTOR	2SB1120	
Q905	8-729-903-10	TRANSISTOR	FMW1	
Q906	8-729-903-10	TRANSISTOR	FMW1	
Q908	8-729-924-79	TRANSISTOR	FMG8	
Q909	8-729-924-79	TRANSISTOR	FMG8	
Q910	8-729-903-10	TRANSISTOR	FMW1	
Q911	8-729-924-79	TRANSISTOR	FMG8	
Q912	8-729-905-57	TRANSISTOR	DTA124EU	

< RESISTOR >

Ref.No.	Part No.	Description				Remark
R101	1-216-834-11	METAL CHIP	12K	5%	1/16W	
R102	1-216-834-11	METAL CHIP	12K	5%	1/16W	
R103	1-216-837-11	METAL CHIP	22K	5%	1/16W	
R104	1-216-837-11	METAL CHIP	22K	5%	1/16W	
R105	1-216-839-11	METAL CHIP	33K	5%	1/16W	
R106	1-216-839-11	METAL CHIP	33K	5%	1/16W	
R107	1-216-843-11	METAL CHIP	68K	5%	1/16W	
R108	1-216-843-11	METAL CHIP	68K	5%	1/16W	
R109	1-216-821-11	METAL CHIP	1K	5%	1/16W	
R110	1-216-845-11	METAL CHIP	100K	5%	1/16W	
R111	1-216-839-11	METAL CHIP	33K	5%	1/16W	
R112	1-216-823-11	METAL CHIP	1.5K	5%	1/16W	
R113	1-216-809-11	METAL CHIP	100	5%	1/16W	
R114	1-216-837-11	METAL CHIP	22K	5%	1/16W	
R115	1-216-837-11	METAL CHIP	22K	5%	1/16W	
R116	1-216-843-11	METAL CHIP	68K	5%	1/16W	
R117	1-216-832-11	METAL CHIP	8.2K	5%	1/16W	
R118	1-216-796-11	METAL GLAZE	8.2	5%	1/16W	
R119	1-216-793-11	METAL GLAZE	4.7	5%	1/16W	
R120	1-216-815-11	METAL CHIP	330	5%	1/16W	
R121	1-216-789-11	METAL CHIP	2.2	5%	1/16W	
R122	1-216-823-11	METAL CHIP	1.5K	5%	1/16W	
R123	1-216-819-11	METAL CHIP	680	5%	1/16W	
R124	1-216-821-11	METAL CHIP	1K	5%	1/16W	
R125	1-216-813-11	METAL CHIP	220	5%	1/16W	
R130	1-216-846-11	METAL CHIP	120K	5%	1/16W	
R201	1-216-834-11	METAL CHIP	12K	5%	1/16W	
R202	1-216-834-11	METAL CHIP	12K	5%	1/16W	
R203	1-216-837-11	METAL CHIP	22K	5%	1/16W	
R204	1-216-837-11	METAL CHIP	22K	5%	1/16W	
R205	1-216-839-11	METAL CHIP	33K	5%	1/16W	
R206	1-216-839-11	METAL CHIP	33K	5%	1/16W	
R207	1-216-843-11	METAL CHIP	68K	5%	1/16W	
R208	1-216-843-11	METAL CHIP	68K	5%	1/16W	
R209	1-216-821-11	METAL CHIP	1K	5%	1/16W	
R210	1-216-845-11	METAL CHIP	100K	5%	1/16W	
R211	1-216-839-11	METAL CHIP	33K	5%	1/16W	
R212	1-216-823-11	METAL CHIP	1.5K	5%	1/16W	
R213	1-216-809-11	METAL CHIP	100	5%	1/16W	
R214	1-216-837-11	METAL CHIP	22K	5%	1/16W	
R215	1-216-837-11	METAL CHIP	22K	5%	1/16W	
R216	1-216-843-11	METAL CHIP	68K	5%	1/16W	
R217	1-216-843-11	METAL CHIP	68K	5%	1/16W	
R218	1-216-796-11	METAL GLAZE	8.2	5%	1/16W	
R219	1-216-793-11	METAL GLAZE	4.7	5%	1/16W	
R220	1-216-815-11	METAL CHIP	330	5%	1/16W	
R221	1-216-789-11	METAL CHIP	2.2	5%	1/16W	
R222	1-216-823-11	METAL CHIP	1.5K	5%	1/16W	
R223	1-216-819-11	METAL CHIP	680	5%	1/16W	
R224	1-216-821-11	METAL CHIP	1K	5%	1/16W	
R225	1-216-813-11	METAL CHIP	220	5%	1/16W	
R230	1-216-846-11	METAL CHIP	120K	5%	1/16W	
R301	1-216-825-11	METAL CHIP	2.2K	5%	1/16W	
R302	1-216-825-11	METAL CHIP	2.2K	5%	1/16W	
R303	1-216-839-11	METAL CHIP	33K	5%	1/16W	
R304	1-216-839-11	METAL CHIP	33K	5%	1/16W	
R305	1-216-845-11	METAL CHIP	100K	5%	1/16W	
R306	1-216-845-11	METAL CHIP	100K	5%	1/16W	
R307	1-216-833-11	METAL CHIP	10K	5%	1/16W	
R308	1-216-829-11	METAL CHIP	4.7K	5%	1/16W	

MAIN CN JACK

Ref.No.	Part No.	Description				Remark
R309	1-216-809-11	METAL CHIP	100	5%	1/16W	
R310	1-216-809-11	METAL CHIP	100	5%	1/16W	
R320	1-216-864-11	METAL CHIP	0	5%	1/16W	
R321	1-216-811-11	METAL CHIP	150	5%	1/16W	
R322	1-216-822-11	METAL CHIP	1.2K	5%	1/16W	
R323	1-216-841-11	METAL CHIP	47K	5%	1/16W	
R324	1-216-821-11	METAL CHIP	1K	5%	1/16W	
R325	1-216-841-11	METAL CHIP	47K	5%	1/16W	
R326	1-216-025-00	METAL CHIP	100	5%	1/10W	
R327	1-216-857-11	METAL CHIP	1M	5%	1/16W	
R328	1-216-821-11	METAL CHIP	1K	5%	1/16W	
R330	1-216-821-11	METAL CHIP	1K	5%	1/16W	
R331	1-216-825-11	METAL CHIP	2.2K	5%	1/16W	
R332	1-216-833-11	METAL CHIP	10K	5%	1/16W	
R333	1-216-821-11	METAL CHIP	1K	5%	1/16W	
R334	1-218-705-11	METAL GLAZE	3.6K	5%	1/16W	
R339	1-216-825-11	METAL CHIP	2.2K	5%	1/16W	
R340	1-216-825-11	METAL CHIP	2.2K	5%	1/16W	
R360	1-216-833-11	METAL CHIP	10K	5%	1/16W	
R361	1-216-833-11	METAL CHIP	10K	5%	1/16W	
R362	1-216-829-11	METAL CHIP	4.7K	5%	1/16W	
R363	1-216-864-11	METAL CHIP	0	5%	1/16W	
R401	1-218-716-11	METAL CHIP	10K	0.50%	1/16W	
R402	1-216-827-11	METAL CHIP	3.3K	5%	1/16W	
R403	1-216-824-11	METAL CHIP	1.8K	5%	1/16W	
R404	1-216-805-11	METAL CHIP	47	5%	1/16W	
R405	1-216-833-11	METAL CHIP	10K	5%	1/16W	
R409	1-218-720-11	METAL CHIP	15K	0.50%	1/16W	
R410	1-218-734-11	METAL CHIP	56K	0.50%	1/16W	
R411	1-218-724-11	METAL CHIP	22K	0.50%	1/16W	
R412	1-218-724-11	METAL CHIP	22K	0.50%	1/16W	
R413	1-217-671-11	METAL CHIP	1	5%	1/10W	
R414	1-216-821-11	METAL CHIP	1K	5%	1/16W	
R415	1-217-671-11	METAL CHIP	1	5%	1/10W	
R417	1-216-806-11	METAL GLAZE	56	5%	1/16W	
R418	1-216-835-11	METAL CHIP	15K	5%	1/16W	
R419	1-216-832-11	METAL CHIP	8.2K	5%	1/16W	
R420	1-218-330-11	METAL CHIP	11K	0.50%	1/16W	
R421	1-216-833-11	METAL CHIP	10K	5%	1/16W	
R422	1-216-839-11	METAL CHIP	33K	5%	1/16W	
R423	1-216-846-11	METAL CHIP	120K	5%	1/16W	
R427	1-216-857-11	METAL CHIP	1M	5%	1/16W	
R428	1-216-857-11	METAL CHIP	1M	5%	1/16W	
R429	1-216-857-11	METAL CHIP	1M	5%	1/16W	
R430	1-216-857-11	METAL CHIP	1M	5%	1/16W	
R431	1-216-845-11	METAL CHIP	100K	5%	1/16W	
R436	1-216-831-11	METAL CHIP	6.8K	5%	1/16W	
R437	1-216-864-11	METAL CHIP	0	5%	1/16W	
R438	1-216-854-11	METAL CHIP	560K	5%	1/16W	

Ref.No.	Part No.	Description				Remark
R501	1-217-671-11	METAL CHIP	1	5%	1/10W	
R502	1-216-835-11	METAL CHIP	15K	5%	1/16W	
R503	1-218-290-11	METAL GLAZE	6.2K	5%	1/16W	
R504	1-216-829-11	METAL CHIP	4.7K	5%	1/16W	
R505	1-216-857-11	METAL CHIP	1M	5%	1/16W	
R506	1-216-841-11	METAL CHIP	47K	5%	1/16W	
R507	1-216-839-11	METAL CHIP	33K	5%	1/16W	
R508	1-216-843-11	METAL CHIP	68K	5%	1/16W	
R509	1-218-332-11	METAL GLAZE	130K	5%	1/16W	
R510	1-216-850-11	METAL CHIP	270K	5%	1/16W	
R511	1-216-845-11	METAL CHIP	100K	5%	1/16W	
R512	1-216-822-11	METAL CHIP	1.2K	5%	1/16W	
R513	1-216-833-11	METAL CHIP	10K	5%	1/16W	
R514	1-216-833-11	METAL CHIP	10K	5%	1/16W	
R515	1-216-847-11	METAL CHIP	150K	5%	1/16W	
R528	1-218-736-11	METAL CHIP	68K	0.50%	1/16W	
R529	1-218-736-11	METAL CHIP	68K	0.50%	1/16W	
R530	1-218-736-11	METAL CHIP	68K	0.50%	1/16W	
R531	1-218-736-11	METAL CHIP	68K	0.50%	1/16W	
R532	1-218-744-11	METAL CHIP	150K	0.50%	1/16W	
R533	1-218-744-11	METAL CHIP	150K	0.50%	1/16W	
R534	1-216-841-11	METAL CHIP	47K	5%	1/16W	
R535	1-216-065-00	METAL CHIP	4.7K	5%	1/10W	
R536	1-216-067-00	METAL GLAZE	5.6K	5%	1/10W	
R537	1-216-864-11	METAL CHIP	0	5%	1/16W	
R538	1-216-843-11	METAL CHIP	68K	5%	1/16W	
R539	1-218-286-11	METAL GLAZE	91	5%	1/16W	
R550	1-218-716-11	METAL CHIP	10K	0.50%	1/16W	
R571	1-216-797-11	METAL CHIP	10	5%	1/16W	
R572	1-216-821-11	METAL CHIP	1K	5%	1/16W	
R601	1-216-833-11	METAL CHIP	10K	5%	1/16W	
R602	1-216-835-11	METAL CHIP	15K	5%	1/16W	
R603	1-216-845-11	METAL CHIP	100K	5%	1/16W	
R604	1-216-839-11	METAL CHIP	33K	5%	1/16W	
R605	1-216-827-11	METAL CHIP	3.3K	5%	1/16W	
R606	1-216-831-11	METAL CHIP	6.8K	5%	1/16W	
R607	1-216-827-11	METAL CHIP	3.3K	5%	1/16W	
R608	1-216-857-11	METAL CHIP	1M	5%	1/16W	
R609	1-216-833-11	METAL CHIP	10K	5%	1/16W	
R612	1-216-809-11	METAL CHIP	100	5%	1/16W	
R615	1-218-740-11	METAL CHIP	100K	0.50%	1/16W	
R621	1-216-841-11	METAL CHIP	47K	5%	1/16W	
R623	1-216-864-11	METAL CHIP	0	5%	1/16W	(EXCEPT US-11)
R631	1-216-829-11	METAL CHIP	4.7K	5%	1/16W	
R650	1-216-825-11	METAL CHIP	2.2K	5%	1/16W	
R651	1-216-864-11	METAL CHIP	0	5%	1/16W	
R652	1-218-740-11	METAL CHIP	100K	0.50%	1/16W	
R654	1-218-716-11	METAL CHIP	10K	0.50%	1/16W	

Ref.No.	Part No.	Description			Remark
R655	1-216-822-11	METAL CHIP	1.2K	5%	1/16W
R656	1-216-845-11	METAL CHIP	100K	5%	1/16W
R657	1-216-864-11	METAL CHIP	0	5%	1/16W
R667	1-218-740-11	METAL CHIP	100K	0.50%	1/16W
R668	1-216-845-11	METAL CHIP	100K	5%	1/16W
R669	1-216-829-11	METAL CHIP	4.7K	5%	1/16W
R670	1-216-861-11	METAL CHIP	2.2M	5%	1/16W
R673	1-216-841-11	METAL CHIP	47K	5%	1/16W
R801	1-216-833-11	METAL CHIP	10K	5%	1/16W
R802	1-218-345-11	METAL GLAZE	9.1K	5%	1/16W
R803	1-216-821-11	METAL CHIP	1K	5%	1/16W
R804	1-216-821-11	METAL CHIP	1K	5%	1/16W
R805	1-216-821-11	METAL CHIP	1K	5%	1/16W
R806	1-216-845-11	METAL CHIP	100K	5%	1/16W
R808	1-216-849-11	METAL CHIP	220K	5%	1/16W(EXCEPT US-11)
R811	1-218-716-11	METAL CHIP	10K	0.50%	1/16W
R812	1-216-820-11	METAL CHIP	820	5%	1/16W
R813	1-216-822-11	METAL CHIP	1.2K	5%	1/16W
R814	1-216-824-11	METAL CHIP	1.8K	5%	1/16W
R815	1-216-825-11	METAL CHIP	2.2K	5%	1/16W
R816	1-216-827-11	METAL CHIP	3.3K	5%	1/16W
R817	1-216-829-11	METAL CHIP	4.7K	5%	1/16W
R818	1-216-838-11	METAL CHIP	27K	5%	1/16W
R821	1-216-837-11	METAL CHIP	22K	5%	1/16W
R822	1-216-837-11	METAL CHIP	22K	5%	1/16W
R823	1-216-837-11	METAL CHIP	22K	5%	1/16W
R824	1-216-829-11	METAL CHIP	4.7K	5%	1/16W
R825	1-216-857-11	METAL CHIP	1M	5%	1/16W
R826	1-216-851-11	METAL CHIP	330K	5%	1/16W
R827	1-216-821-11	METAL CHIP	1K	5%	1/16W
R828	1-216-821-11	METAL CHIP	1K	5%	1/16W
R829	1-216-821-11	METAL CHIP	1K	5%	1/16W
R830	1-216-857-11	METAL CHIP	1M	5%	1/16W
R831	1-216-857-11	METAL CHIP	1M	5%	1/16W
R832	1-216-857-11	METAL CHIP	1M	5%	1/16W
R833	1-216-843-11	METAL CHIP	68K	5%	1/16W
R834	1-216-843-11	METAL CHIP	68K	5%	1/16W
R835	1-216-861-11	METAL CHIP	2.2M	5%	1/16W
R836	1-216-854-11	METAL CHIP	560K	5%	1/16W
R837	1-216-811-11	METAL CHIP	150	5%	1/16W
R841	1-218-717-11	METAL CHIP	11K	0.50%	1/16W
R842	1-218-734-11	METAL CHIP	56K	0.50%	1/16W
R843	1-216-857-11	METAL CHIP	1M	5%	1/16W
R844	1-216-864-11	METAL CHIP	0	5%	1/16W
R845	1-216-861-11	METAL CHIP	2.2M	5%	1/16W(US-11)
R901	1-216-799-11	METAL CHIP	15	5%	1/16W
R902	1-216-805-11	METAL CHIP	47	5%	1/16W
R903	1-216-799-11	METAL CHIP	15	5%	1/16W
R904	1-216-805-11	METAL CHIP	47	5%	1/16W
R905	1-216-805-11	METAL CHIP	47	5%	1/16W
R906	1-216-809-11	METAL CHIP	100	5%	1/16W
R907	1-216-805-11	METAL CHIP	47	5%	1/16W
R908	1-216-809-11	METAL CHIP	100	5%	1/16W
R909	1-216-805-11	METAL CHIP	47	5%	1/16W
R910	1-216-809-11	METAL CHIP	100	5%	1/16W
R911	1-216-805-11	METAL CHIP	47	5%	1/16W
R912	1-216-809-11	METAL CHIP	100	5%	1/16W
R913	1-216-805-11	METAL CHIP	47	5%	1/16W
R914	1-216-809-11	METAL CHIP	100	5%	1/16W
R915	1-216-805-11	METAL CHIP	47	5%	1/16W
R916	1-216-809-11	METAL CHIP	100	5%	1/16W
R917	1-216-805-11	METAL CHIP	47	5%	1/16W
R918	1-216-809-11	METAL CHIP	100	5%	1/16W
R919	1-216-805-11	METAL CHIP	47	5%	1/16W
R920	1-216-809-11	METAL CHIP	100	5%	1/16W
R921	1-216-805-11	METAL CHIP	47	5%	1/16W
R922	1-216-809-11	METAL CHIP	100	5%	1/16W
R923	1-216-805-11	METAL CHIP	47	5%	1/16W
R924	1-216-809-11	METAL CHIP	100	5%	1/16W
R927	1-216-864-11	METAL CHIP	0	5%	1/16W
R928	1-216-817-11	METAL CHIP	470	5%	1/16W
R929	1-216-821-11	METAL CHIP	1K	5%	1/16W
R931	1-216-829-11	METAL CHIP	4.7K	5%	1/16W
R932	1-216-829-11	METAL CHIP	4.7K	5%	1/16W
R933	1-216-829-11	METAL CHIP	4.7K	5%	1/16W
R934	1-216-829-11	METAL CHIP	4.7K	5%	1/16W
R935	1-216-809-11	METAL CHIP	100	5%	1/16W
R936	1-216-805-11	METAL CHIP	47	5%	1/16W
R937	1-216-809-11	METAL CHIP	100	5%	1/16W
R938	1-216-805-11	METAL CHIP	47	5%	1/16W
R939	1-216-809-11	METAL CHIP	100	5%	1/16W
R940	1-216-805-11	METAL CHIP	47	5%	1/16W
R941	1-216-809-11	METAL CHIP	100	5%	1/16W
R942	1-216-805-11	METAL CHIP	47	5%	1/16W
R943	1-216-829-11	METAL CHIP	4.7K	5%	1/16W
R944	1-216-845-11	METAL CHIP	100K	5%	1/16W
R945	1-216-841-11	METAL CHIP	47K	5%	1/16W
R946	1-216-841-11	METAL CHIP	47K	5%	1/16W
R947	1-216-829-11	METAL CHIP	4.7K	5%	1/16W
R948	1-216-835-11	METAL CHIP	15K	5%	1/16W

< VARIABLE RESISTOR >

RV301	1-223-444-21	RES, VAR, CARBON 10K/10K (VOLUME)
RV650	1-223-274-11	RES, ADJ 2.2K

MAIN CN JACK SK

Ref.No.	Part No.	Description	Remark
		< SWITCH >	
S301	1-571-506-41	SWITCH, SLIDE (AVLS)	
S401	1-572-126-11	SWITCH, PUSH (1 KEY) (BATTERY DETECT)	
S801	1-570-953-11	SWITCH, PUSH (1 KEY) (OPEN)	
S802	1-572-908-11	SWITCH, SLIDE (RESUME)	
S811	1-572-272-11	SWITCH, SLIDE (HOLD)	
S820	1-692-459-11	SWITCH (▶ II)	
S821	1-692-459-11	SWITCH (■ STOP/DISPLAY OFF)	
S822	1-692-459-11	SWITCH (⏭)	
S823	1-692-459-11	SWITCH (⏮)	
S824	1-692-459-11	SWITCH (REPEAT/ENTER)	
S825	1-692-459-11	SWITCH (PLAY MODE)	
S826	1-692-459-11	SWITCH (DSP)	
S827	1-692-459-11	SWITCH (SURROUND)	
S901	1-572-272-11	SWITCH, SLIDE (ILLUMINATION)	
		< THERMISTOR >	
TH601	1-810-236-11	THERMISTOR, POSITIVE	
		< VIBRATOR >	
X301	1-760-023-21	VIBRATOR, CRYSTAL (16.9MHz)	
X801	1-579-063-21	VIBRATOR, CERAMIC (4.19MHz)	

****

*	1-649-727-11	SK BOARD (US-11)	
		**********	
		< CAPACITOR >	
C452	1-104-847-91	TANTAL. CHIP 22uF 20% 4V	
		< DIODE >	
D808	8-719-404-46	DIODE MA110	
D809	8-719-421-27	DIODE MA728	
		< TRANSISTOR >	
Q812	8-729-905-18	TRANSISTOR DTC144EU	
		< RESISTOR >	
R808	1-216-849-11	METAL CHIP 220K 5% 1/16W	

****

		MISCELLANEOUS	
		**********	
⚠102	8-848-289-21	DEVICE, OPTICAL KSS-331A	
M901	X-2625-485-1	MOTOR ASSY, T.T.	
M902	X-2625-171-2	MOTOR ASSY, SLED	
S910	1-570-771-11	SWITCH (LIMIT)	

****

Ref.No.	Part No.	Description	Remark
		ACCESSORIES & PACKING MATERIALS	
		**********	
	X-4943-745-1	PIPE ASSY, FLEXIBLE (JE)	
⚠	1-467-007-21	ADAPTOR, AC (AC-E455) (AUS)	
⚠	1-467-008-11	ADAPTOR, AC (AC-E455) (AEC,AEL)	
⚠	1-467-009-11	ADAPTOR, AC (AC-E455) (US,Canadian)	
⚠	1-467-011-11	ADAPTOR, AC (AC-E455) (E,JE)	
⚠	1-467-012-11	ADAPTOR, AC (AC-E455) (EA)	
	1-467-210-11	REMOTE COMMANDER (RM-DM10)	
	1-532-360-XX	FUSE (125V/1A) (JE)	
	1-555-658-21	CORD, CONNECTION (EA)	
⚠	1-569-007-11	ADAPTER, CONVERSION 2P (E,JE)	
⚠	1-569-008-11	ADAPTER, CONVERSION 2P (EA)	
	1-575-195-11	CORD, CONNECTION (EA)	
	1-751-087-11	CORD, CAR BATTERY (DCC-E455) (JE)	
	1-751-419-11	CORD, CONNECTION (US,Canadian,AEC,AEL,E,AUS,JE)	
	2-120-534-01	CLAMP, CORD (JE)	
*	2-120-542-01	BRAKET, BASE (JE)	
	2-201-810-00	TAPE, MAGIC (JE)	
	3-757-245-11	MANUAL, INSTRUCTION (FRENCH,SPANISH) (Candian,AEC,AEL,E,EA)	
	3-757-245-21	MANUAL, INSTRUCTION (ENGLISH) (US,Canadian,AEC,AEL,E,EA,AUS,)	
	3-757-245-41	MANUAL, INSTRUCTION (DUTCH,SWEDISH,PORTUGUESE) (AEC)	
	3-757-245-51	MANUAL, INSTRUCTION (GERMAN,ITALIAN) (AEL)	
	3-757-245-61	MANUAL, INSTRUCTION (CHINESE,KOREAN,JAPANESE) (JE)	
	3-757-245-71	MANUAL, INSTRUCTION (ENGLISH,FRENCH,SPANISH) (JE)	
*	4-957-230-01	CUSHION (UPPER)	
*	4-959-842-01	INDIVIDUAL CARTON (US,Canadian)	
*	4-959-846-01	INDIVIDUAL CARTON (AEC,AEL,E,EA)	
*	4-959-847-01	CUSHION (LOWER) (AEC,AEL,E,EA,JE)	
*	4-959-857-01	CUSHION (LOWER) (US;Canadian)	
*	4-959-864-01	CUSHION (LOWER) (AUS)	
	4-960-178-01	TAPE (REMOTE CONTROL), MAGIC	
*	4-960-778-01	INDIVIDUAL CARTON (AUS)	
*	4-960-780-01	INDIVIDUAL CARTON (JE)	
*	4-960-845-01	INDIVIDUAL CARTON (CPM-302P) (JE)	
	4-961-140-01	LID, BATTERY CASE (RM-DM10)	
	7-682-665-09	SCREW +PS 4X16 (JE)	
	7-683-323-07	BOLT, HEXAGON (JE)	

****

The components identified by mark ⚠ or dotted line with mark. ⚠ are critical for safety. Replace only with part number specified.	Les components identifiés par une marque ⚠ sont critiques pour la sécurité. Ne les remplacer que par une pièc portant le numéro spéccifié.

Ref.No.	Part No.	Description	Remark

****
HARDWARE LIST
****

#1	7-627-852-17	+P 1.7X4
#2	7-671-155-01	STEEL BALL 3.0
#3	7-627-852-18	SCREW,PRECISION +P 1.7X4 TYPE3
#4	7-685-104-19	SCREW (2X6), TAPPING (B)
#5	7-685-105-19	SCREW (2X8), TAPPING (B)

English
93F1861-1
Printed in Japan

9-957-962-11

Sony Corporation
General Audio Group

Published by Audio Sector Quality Assurance Dept.