D-824K

SERVICE MANUAL

REVISED

US Model
Canadian Model

There are the former type and the new type in the model D-824K.
The mechanical and the electrical specifications of the former type are almost same as them of the model D-822K.
So this manual contains only the informations for the new type.
But the Exploded Views are for both types former and new.
For the informations not contained in this manual, please refer to the D-822K service manuals (9-957-962-□□).

Model Name Using Similar Mechanism	D-822K/826K
Optical Device Name	KSM-331AAN(S)
Optical Pick-Up Name	KSS-331A

- **NEW/FORMER DISCRIMINATION**

– FORMER –

【MAIN BOARD】 (CONDUCTOR SIDE)

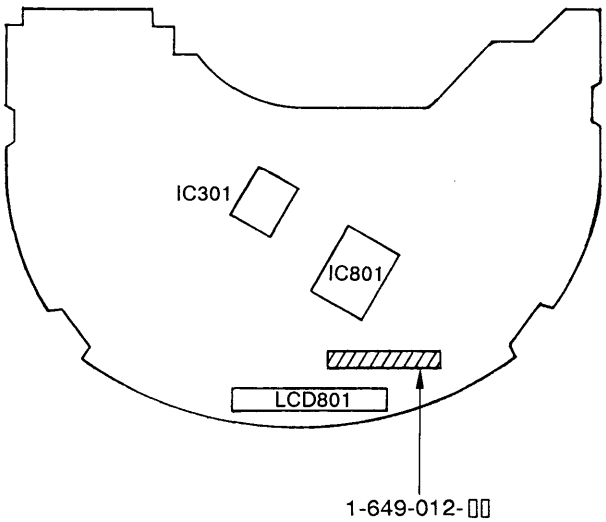

– NEW –

【MAIN BOARD】 (CONDUCTOR SIDE)

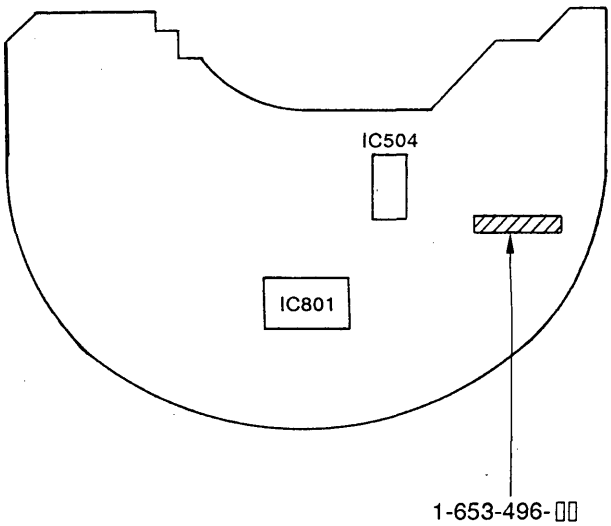

COMPACT DISC COMPACT PLAYER

SONY®

使用時は添付資料も参照のこと
Refer to the additional documents.

SECTION 1
SERVICE NOTE

TABLE OF CONTENTS

Section	Title	Page
1.	SERVICE NOTE	2
2.	SERVICE MODE	4
3.	ELECTRICAL ADJUSTMENTS	5
4.	DIAGRAMS	
4-1.	Block Diagram	8
4-2.	Printed Wiring Boards	12
4-3.	Schematic Diagram	17
4-4.	IC Pin Function	25
5.	EXPLODED VIEWS	27
6.	ELECTRICAL PARTS LIST	30

CAUTION

Use of controls or adjustments or performance of procedures other than those specified herein may result in hazardous radiation exposure.

Flexible Circuit Board Repairing

- Keep the temperature of the soldering iron around 270℃ during repairing.
- Do not touch the soldering iron on the same conductor of the circuit board (within 3 times).
- Be careful not to apply force on the conductor when soldering or unsoldering.

Notes on chip component replacement

- Never reuse a disconnected chip component.
- Notice that the minus side of a tantalum capacitor may be damaged by heat.

SAFETY-RELATED COMPONENT WARNING!!

COMPONENTS IDENTIFIED BY MARK ⚠ OR DOTTED LINE WITH MARK ⚠ ON THE SCHEMATIC DIAGRAMS AND IN THE PARTS LIST ARE CRITICAL TO SAFE OPERATION. REPLACE THESE COMPONENTS WITH SONY PARTS WHOSE PART NUMBERS APPEAR AS SHOWN IN THIS MANUAL OR IN SUPPLEMENTS PUBLISHED BY SONY.

NOTES ON HANDLING THE OPTICAL PICK-UP BLOCK OR BASE UNIT

The laser diode in the optical pick-up block may suffer electrostatic breakdown because of the potential difference generated by the charged electrostatic load, etc. on clothing and the human body.
During repair, pay attention to electrostatic breakdown and also use the procedure in the printed matter which is included in the repair parts.
The flexible board is easily damaged and should be handled with care.

NOTES ON LASER DIODE EMISSION CHECK

The laser beam on this model is concentrated so as to be focused on the disc reflective surface by the objective lens in the optical pick-up block. Therefore, when checking the laser diode emission, observe from more than 30 cm away from the objective lens.

Before Replacing the Optical Pick-Up Block

Please be sure to check thoroughly the parameters as par the "Optical Pick-Up Block Checking Procedures" (Part No.: 9-960-027-11) issued separately before replacing the optical pick-up block.
Note and specifications required to check are given below.

- FOK output: IC501 ⑫ pin
  When checking FOK, remove the lead wire to disc motor.
- S curve P-to-P value: 2.5 Vp-p
  When checking S curve P-to-P value, remove the lead wire to disc motor.
- RF signal P-to-P value: 0.8 – 1.1 Vp-p
- Traverse signal P-to-P value: 1.2 – 2.2 Vp-p
- The repairing grating holder is impossible.

ATTENTION AU COMPOSANT AYANT RAPPORT À LA SÉCURITÉ!

LES COMPOSANTS IDENTIFIÉS PAR UNE MARQUE ⚠ SUR LES DIAGRAMMES SCHÉMATIQUES ET LA LISTE DES PIÈCES SONT CRITIQUES POUR LA SÉCURITÉ DE FONCTIONNEMENT. NE REMPLACER CES COMPOSANTS QUE PAR DES PIÈCES SONY DONT LES NUMÉROS SONT DONNÉS DANS CE MANUEL OU DANS LES SUPPLÉMENTS PUBLIÉS PAR SONY.

Precautions for Checking Emission of Laser Diode

Laser light of the equipment is focused by the object lens in the optical pick-up so that the light focuses on the reflection surface of the disc. Therefore, be sure to keep your eyes more then 30 cm apart from the object lens when you check the emission of laser diode.

Laser Diode Checking Methods

During normal operation of the equipment, emission of the laser diode is prohibited unless the upper panel is closed while turning ON the S810 (push switch type).
The following two checking methods for the laser diode are operable.

- **Method-1 (In the service mode or normal operation): Emission of the laser diode is visually checked.**

1. Open the upper panel.
2. Push the S810 as shown in Fig. 1.
3. Check the object lens for confirming normal emission of the laser diode. If not emitting, there is a trouble in the automatic power control circuit or the optical pick-up.
   During normal operation, the laser diode is turned ON about 2.5 seconds for focus searching.

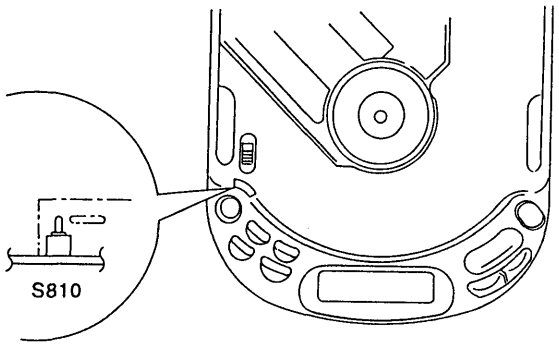

Fig. 1 Method to push the S810

- **Method-2 (In service mode or normal operation): Check the value of current flowing in the laser diode.**

1. Remove the upper panel.
2. Read the current printed on the label attached on the rear side of the optical pick-up.

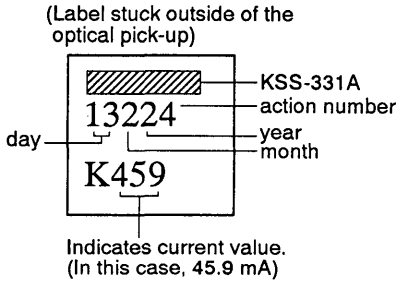

3. Connect a VTVM as shown in Fig. 2.
4. Press the ▶II key.
5. Calculate current value by the reading of the VTVM.
   Reading of the tester (V) ÷ 1=current value (A)
   (Example) Reading of the VTVM of 37 mV:
   37 mV ÷ 1 Ω =0.037 (A) = 37 mA
6. Check that the current value is within the following range.
   - Current value of the label $^{+5}_{-11}$ mA (25 ℃)
     Variation by temperature: 0.4 mA/℃
     Current increases with temperature increased.
     Current decreases with temperature decreased.

   If the current is more than the range above, there is a trouble in the automatic power control circuit or the laser diode is in deterioration.
   If less than the range, a trouble exists in the automatic power control circuit or the optical pick-up.

– MAIN BOARD – (Side B)

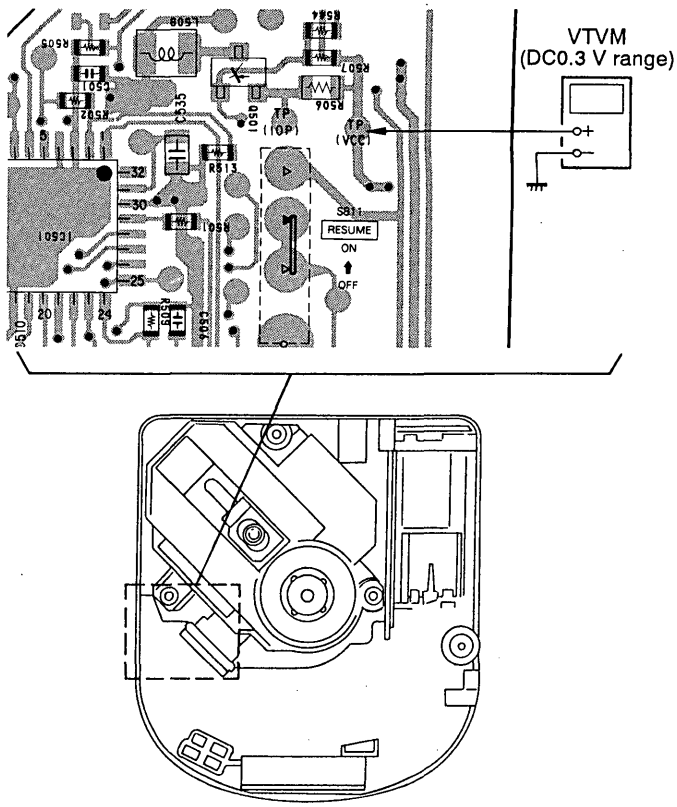

Fig. 2 VTVM connecting location

SECTION 2
SERVICE MODE

Service Mode (Service program)

The equipment is provided with a service program built in the microcomputer, like conventional models.
Service program operation methods are described in the following.

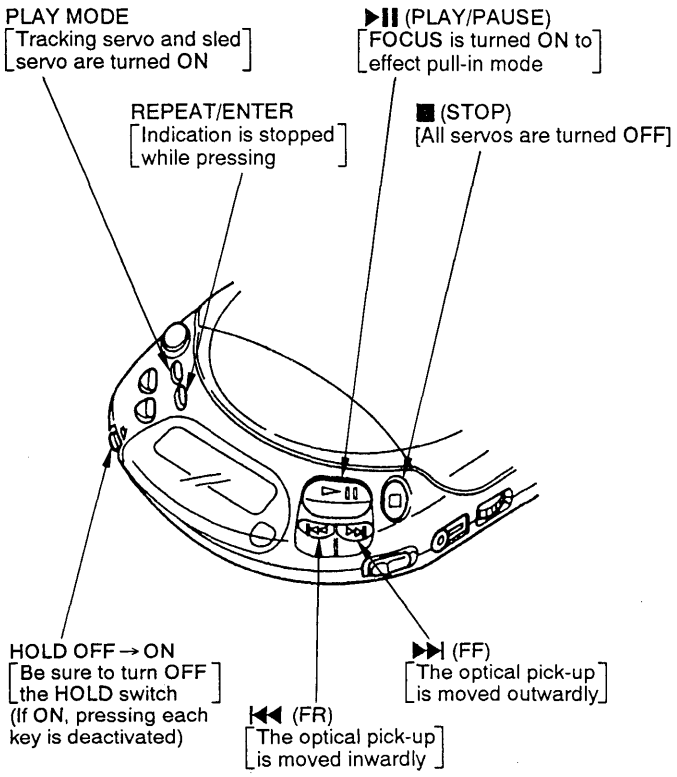

Descriptions in [ ] indicate major operations in the service mode. For more information, see Step 2.

Fig. 3 Layout of each key

- **Step 1 (Service mode setting methods)**

1. Turn OFF the HOLD switch with external power supply disconnected (power is not applied to the set).
2. Solder the jumper wire across the TEST (TAP802) terminals (pin ⑲, IC801 (TEST) is grounded).
3. Connect an external power supply.

   Thus, the set is switched to the service mode.

- **Step 2 (Operation in the service mode)**

1. Once the service mode is effected, the LCD displays 5 indications each of which is repeatedly displayed.
2. By pressing the ▶▶I or I◀◀ key, the optical pick-up is movable inwardly or outwardly. However, if this is activated, tracking servo and sled servo are turned OFF, so it can be turned ON by pressing the PLAY MODE key if required.
3. By pressing the ▶II key, focus is turned ON from focus searching while entering CLV-S (pull-in mode).
   Without disc, focus searching is repeated continuously.
4. By pressing the PLAY MODE key, tracking servo, sled servo and CLV-A (servo in PLAY) are turned ON.
5. When 3. and 4. are performed, playing begins. No muting is ON in the service mode.
6. By pressing the ■ key, all servos (focus, tracking and sled) are turned OFF. However, the disc motor revolves for a while by inertia.

- **Step 3 (Resetting of service mode)**

1. Be sure to disconnect the external power supply and remove the soldered jumper wire at the TEST terminals connected before in setting.
2. The set thus becomes available for normal operation.

– MAIN BOARD – (Side A)

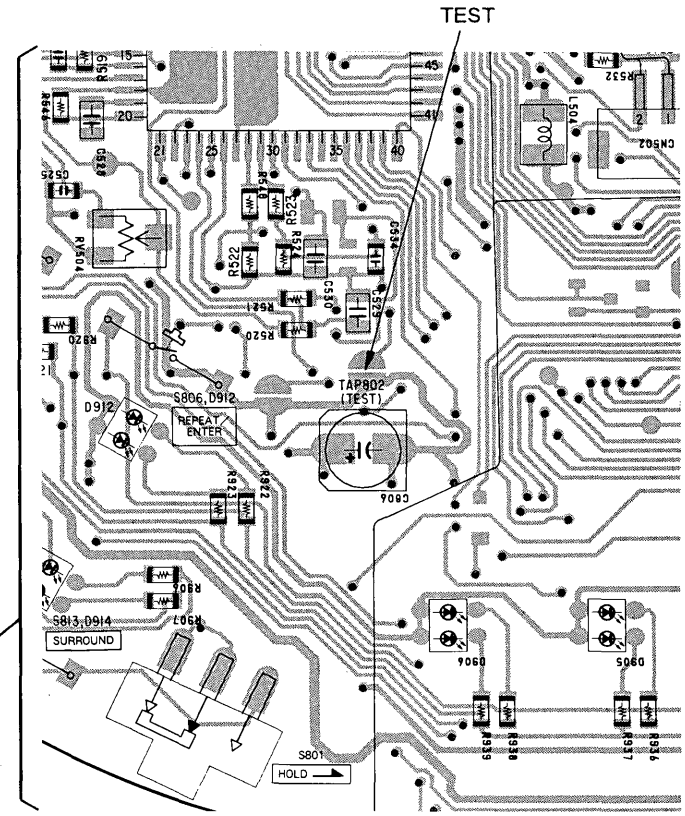

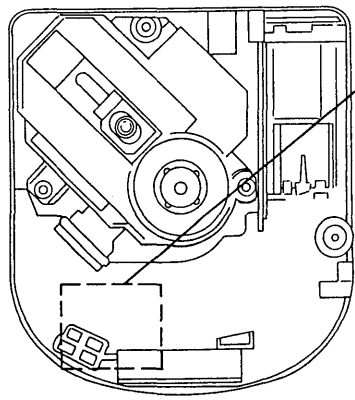

Fig. 4 Location of Test terminal

SECTION 3
ELECTRICAL ADJUSTMENTS

Precautions for Adjustment

1. Before beginning adjustment, set the equipment to service mode.
   After the completion of adjustment, be sure to reset the service mode.
   For more information, see "Service Mode (service program)" on pages 4.
2. Perform adjustments in the order given.
3. Use YEDS-18 disc (Part No.: 3-702-101-01) unless otherwise indicated.
4. Power supply voltage requirement.: DC4.5 V
   HOLD switch : OFF
   VOLUME switch : Minimum
   AVLS switch : OFF
   BASS BOOST switch : NORM
   ESP switch : OFF

Before Beginning Adjustment

Set the equipment to service mode (See page 4) and check the following. If there is an error, repair the equipment.

• Checking of the sled motor

1. Press the ▶▶| and |◀◀ keys and check that the optical pick-up can move smoothly without sluggishness or abnormal noise in innermost periphery → outermost periphery → innermost periphery.
   ▶▶| : The optical pick-up moves outwardly.
   |◀◀ : The optical pick-up moves inwardly.

• Checking of focus searching

1. Press the ▶II key. (Focus searching operation is activated continuously.)
2. Check the object lens of the optical pick-up for smooth up/down motion without sluggishness or abnormal noise.
3. Press the ■ key.
   Check that focus searching operation is deactivated. If not, again press the ■ key slightly longer.

PLL Free Run Frequency Adjustment

Adjustment Procedure:

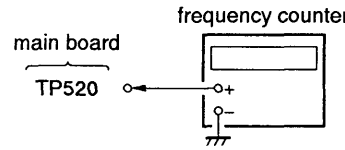

1. Unsolder TAP503 (EFM). (See page 7.)
2. Connect a frequency counter to main board test point TP520.
3. Put the set into service mode stop state. (See page 4.)
4. Check that the frequency counter reading is 4.3518 ± 0.01 MHz.
   If not, adjust RV505 so that it is 4.3518 ± 0.01 MHz.
5. After adjustment, release service mode. (See page 4.)
6. Solder TAP503.

– MAIN BOARD – (Side B)

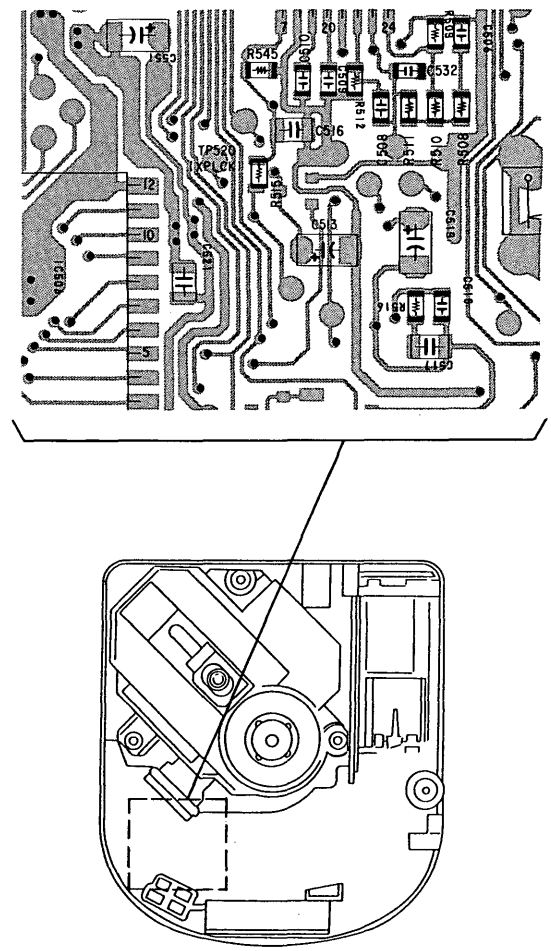

Tracking Balance Adjustment

Condition:

- Hold the set in horizontal state.

Adjustment Procedure:

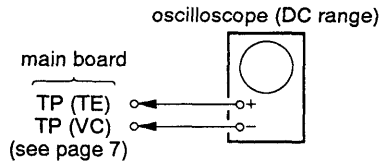

1. Connect the oscilloscope to TP (TE) of the main board.
2. Set the equipment to service mode stop state. (See page 4.)
3. Move the optical pick-up by pressing the ▶▶| and |◀◀ keys.
4. Put the disc (YEDS-18).
5. Press the ▶II key.
   [From focus searching, focus is turned ON while entering CLV drawing-in mode. Tracking and sled are turned OFF.]
6. Adjust RV502 so that the oscilloscope waveform is symmetrical on the top and bottom in relation to 0 V.

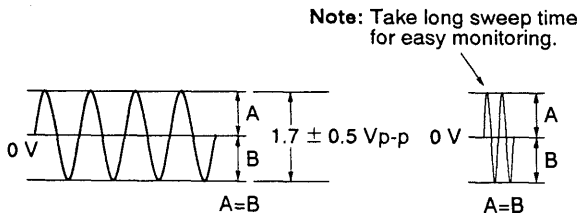

7. Stop revolving of the disc motor by pressing the ■ key.
8. After the completion of adjustment, reset service mode. (See page 4.)

Adjustment Location: Main Board (See page 7.)

Focus Bias Adjustment

Condition:

- Hold the set in horizontal state.

Adjustment Procedure:

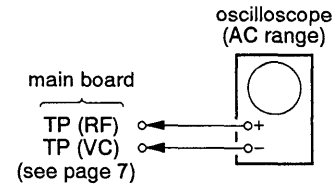

1. Set the equipment to service mode stop state. (See page 4.)
2. Connect the oscilloscope to the test point TP (RF) of the main board.
3. Move the optical pick-up by pressing the ▶▶| and |◀◀ keys.
   (To display the eye pattern more clearly, move the optical pick-up to the music range of the disc.)
4. Put the disc (YEDS-18).
5. Press the ▶II key.
   [From focus searching, focus is turned ON while entering CLV drawing-in mode. Tracking and sled are turned OFF.]
6. Press the PLAY MODE key. (Both tracking and sled are turned ON.)
7. Adjust RV501 so that the oscilloscope waveform eye pattern is good.
   A good eye pattern means that the diamond shape (◇) in the center of the waveform can be clearly distinguished.

RF SIGNAL WAVEFORM (EYE PATTERN)

VOLT DIV : 200 mV (With the 10:1 probe in use)
TIME DIV : 500 ns

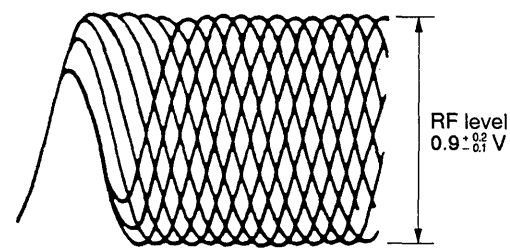

To watch the eye pattern, set the oscilloscope to AC range and increase the vertical sensitivity of the oscilloscope for easy watching.

8. Stop revolving of the disc motor by pressing the ■ key.
9. After the completion of adjustment, reset service mode. (See page 4.)

Adjustment Location: Main Board (See page 7.)

Connection and Adjustment Location

– MAIN BOARD – (Side A)

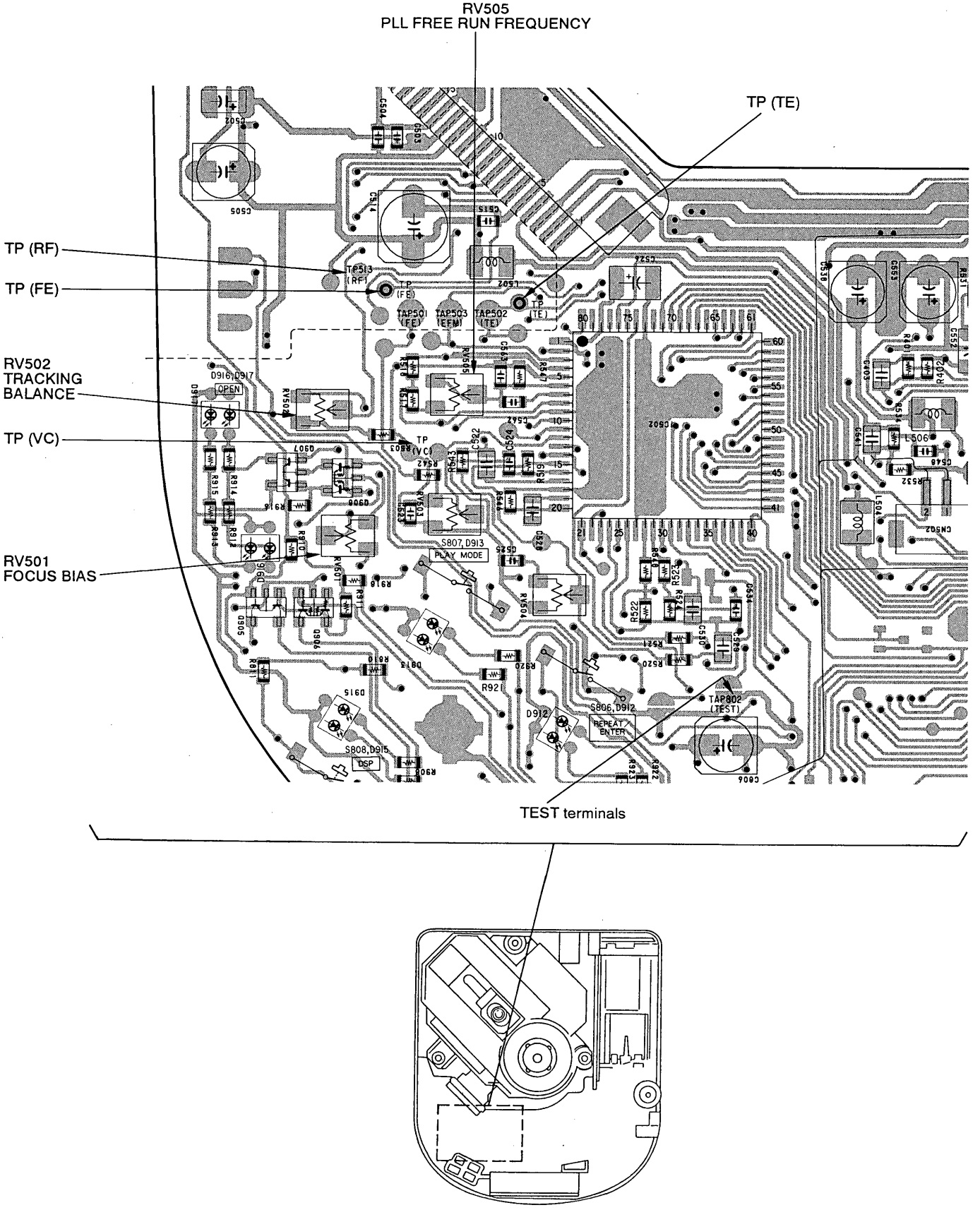

SECTION 4
DIAGRAMS

4-1. BLOCK DIAGRAM

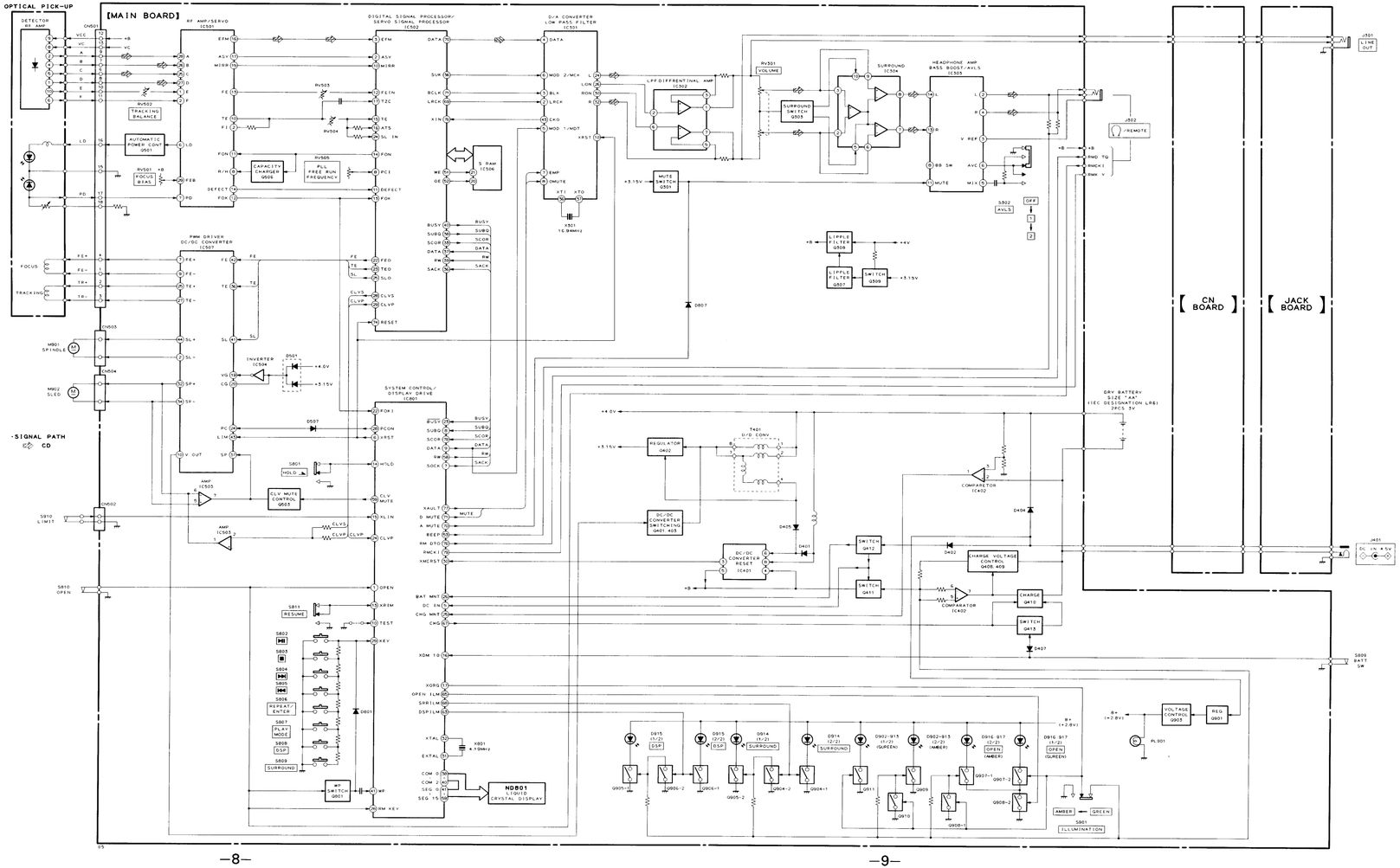

4-2. PRINTED WIRING BOARDS

• See page 21 for Semiconductor Lead Layouts.

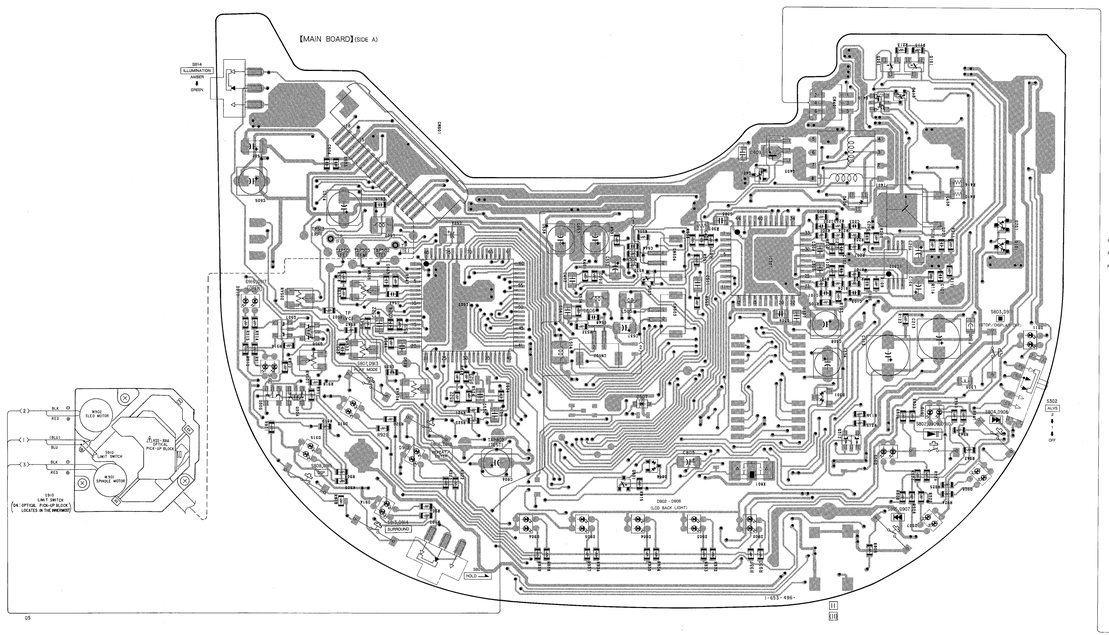

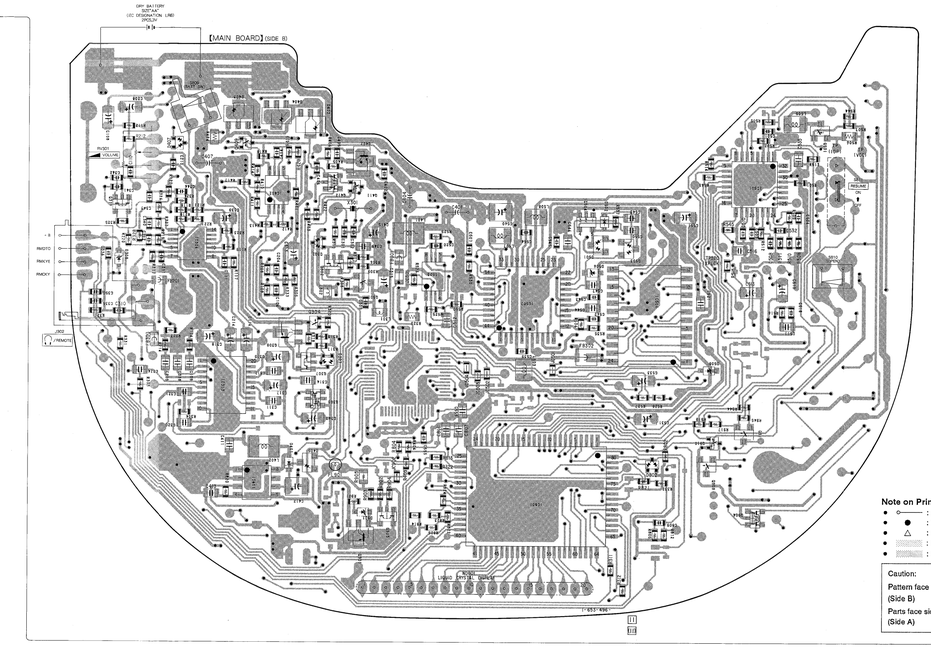

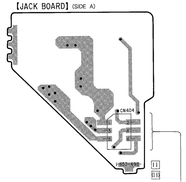

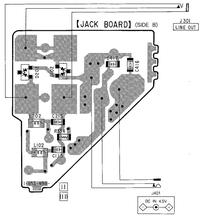

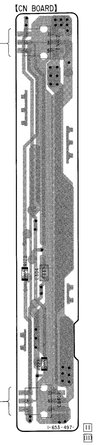

Note on Printed Wiring Board:

- ⟷ : parts extracted from the component side.
- ● : Through hole.
- △ : internal component.
- : Pattern of the rear side.
- : Pattern from the side which enables seeing.

Caution:	
Pattern face side: (Side B)	Parts on the pattern face side seen from the pattern face are indicated.
Parts face side: (Side A)	Parts on the parts face side seen from the parts face are indicated.

• Semiconductor Location

Ref. No.	Location	Ref. No.	Location
D101	E-16	IC304	E-20
D102	B-35	IC401	I-21
D201	E-16	IC402	E-21
D202	B-35	IC501	D-29
D301	H-13	IC502	F-8
D302	E-22	IC503	F-24
D307	G-22	IC504	E-26
D308	E-19	IC506	F-27
D401	H-22	IC507	F-25
D402	C-22	IC801	I-25
D403	C-21		
D404	C-21	Q101	C-15
D405	H-22	Q201	C-14
D406	E-14	Q301	F-23
D407	D-20	Q302	E-22
D501	E-26	Q303	H-22
D502	E-26	Q304	G-22
D503	E-27	Q307	G-22
D506	F-26	Q308	G-22
D507	H-11	Q311	E-19
D508	G-28	Q312	H-14
D802	H-27	Q401	D-12
D804	I-11	Q402	D-23
D901	I-23	Q403	D-13
D902	J-12	Q408	E-15
D903	J-11	Q409	E-21
D904	J-11	Q410	J-14
D905	I-10	Q411	D-23
D906	J-9	Q412	D-22
D907	J-16	Q413	C-15
D908	I-16	Q501	C-30
D909	H-14	Q503	F-11
D910	H-15	Q601	I-10
D911	G-17	Q901	J-23
D912	H-7	Q903	I-23
D913	H-6	Q904	I-29
D914	I-7	Q905	H-5
D915	H-6	Q906	H-5
D916	G-5	Q907	G-5
D917	F-5	Q908	G-6
		Q909	I-28
IC301	F-13	Q910	H-28
IC302	F-14	Q911	H-29
IC303	G-21		

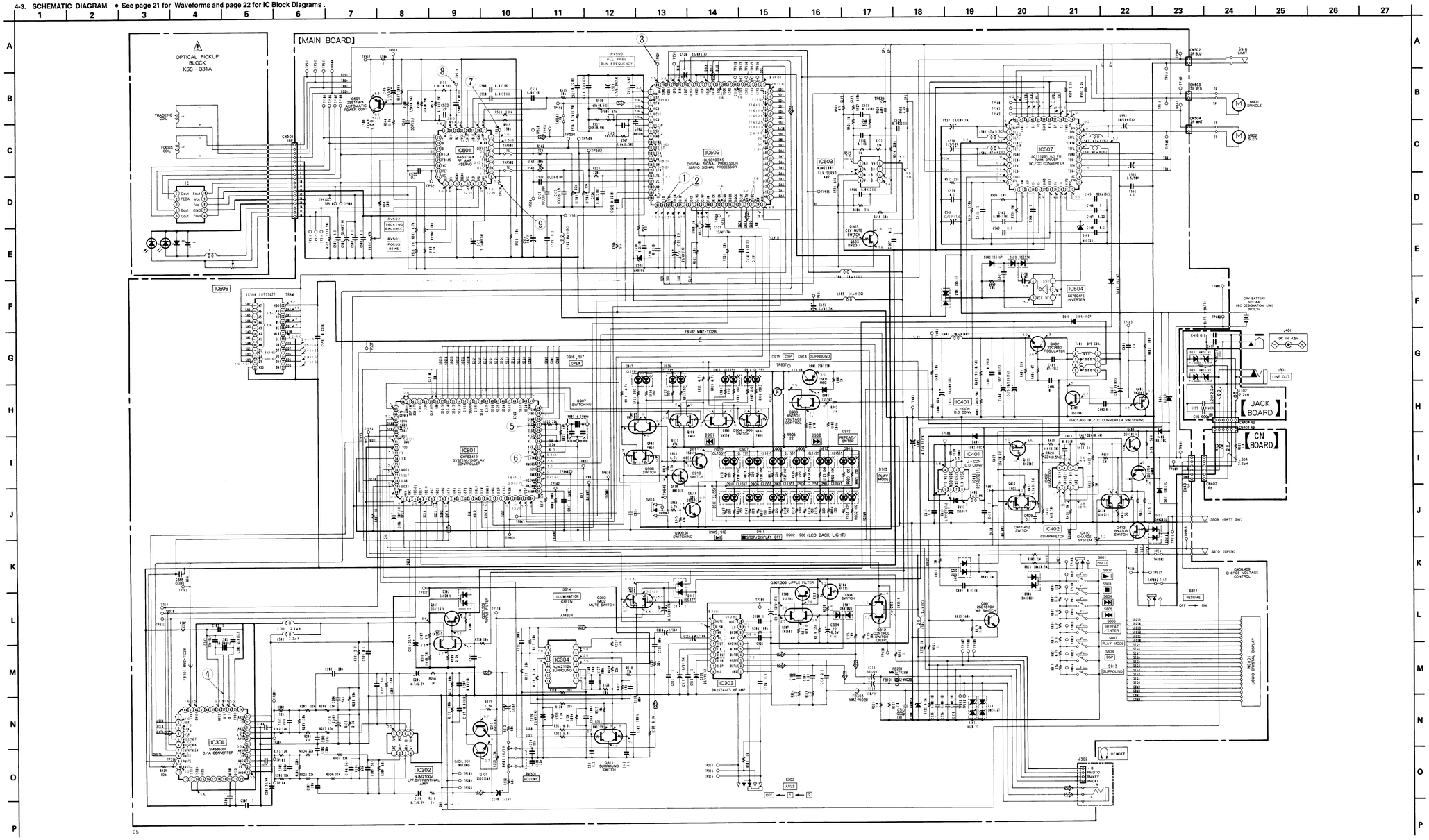

Note on Schematic Diagram:

- All capacitors are in μF unless otherwise noted. pF: μμF 50 WV or less are not indicated except for electrolytics and tantalums.
- All resistors are in Ω and ¼ W or less unless otherwise specified.
- △ : internal component.

Note:	Note:
The components identified by mark △ or dotted line with mark △ are critical for safety. Replace only with part number specified.	Les composants identifiés par une marque △ sont critiques pour la sécurité. Ne les remplacer que par une pièce portant le numéro spécifié.

- ▬▬ : B+ Line.
- ▭ : panel designation.
- ▭ : adjustment for repair.
- Power voltage is dc 4.5 V and fed with regulated dc power supply from external power voltage jack.
- Voltages and waveforms are dc with respect to ground under playing back conditions in service mode.
  no mark : SERVICE MODE PLAY (COMMON)
  ( ) : SERVICE MODE STOP
- Voltages are taken with a VOM (10 MΩ/V).
  Voltage variations may be noted due to normal production tolerances.
- Waveforms are taken with a oscilloscope.
  Voltage variations may be noted due to normal production tolerances.
- Circled numbers refer to waveforms.
- Signal path.
  ⇨ : CD

• Semiconductor Lead Layouts

BA3574AFS-T1

BU9310BKS

SC7S04F

IMD2
XN4212

1SS374-TE85L
1SS367-T3SONY

CL-155Y/PG-CD

BA6373AK

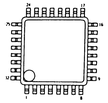

CXP83412-003Q

SC111281LFU

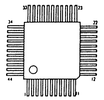

XN1115

LH5116ZE

FMG1
FMG8
XN1215
XN1501

DTZ12

• Waveforms

❶ IC502 ㉒ 500mV/DIV 5ms/DIV

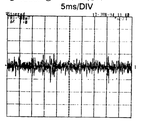

❷ IC502 ㉓ 500mV/DIV 5ms/DIV

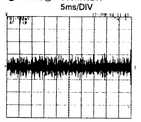

❸ IC502 ㉘

❹ IC301 ㉑

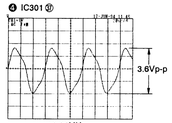

❺ IC801 ㉗

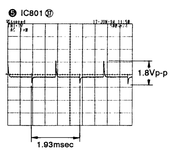

❻ IC801 ㉜

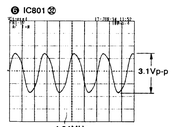

❼ TP (FE) 500mV/DIV 10ms/DIV

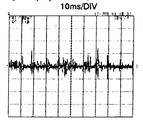

❽ TP (RF) 200mV/DIV 500ns/DIV

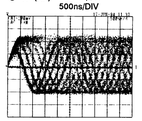

❾ TP (TE) 200mV/DIV 200μs/DIV

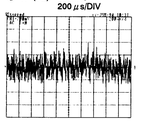

• IC Block Diagrams

MAIN BOARD

IC301 SM5853BF

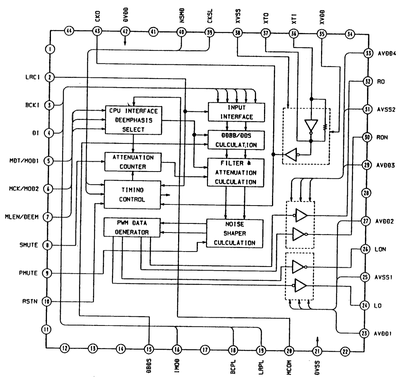

IC302, 402, 503 NJM2100V

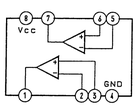

IC303 BA3574AFS-T1

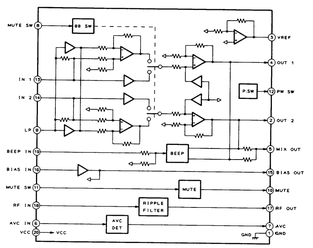

IC401 RS5RJ32271-T1

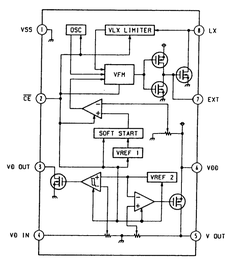

IC501 BA6373AK

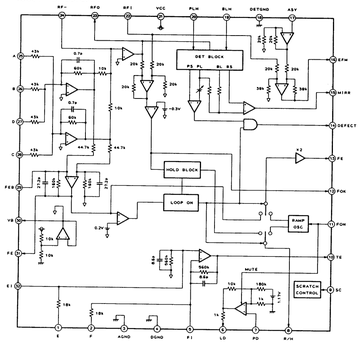

IC502 BU9310BKS

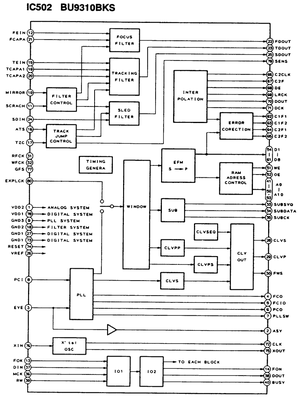

IC507 SC111281LFU

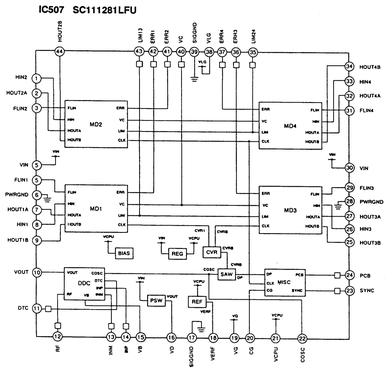

4-4. IC PIN FUNCTION
MAIN BOARD IC801 CXP83412

Pin No.	Pin Name	I/O	Function
1	OPEN	I	Door switch input terminal. Stop state is canceled at rising edge (⌋⌈⌊) of input. "H": OPEN "L": CLOSE
2	RMC	I	Not used. (Infrared ray remote control signal input.)
3	VCCADJ	O	Not used. (Servo power supply adjusting PWM output.)
4	BEEP	O	Beep sound pulse output.
5	XDCIN	I	DC-IN detection input. "L": DC-IN "H": No DC-IN
6	XRST	O	Reset signal output to BU9310BKS, RF5C241, SM5853BF. Resets ICs by "L" level output.
7	SQCK	O	Serial clock output to BU9310KS, SM5853BF.
8	SUBQ	I	SUB-Q signal input from BU9310BKS.
9	DATA	O	Serial data output to BU9310BKS, SM5853BF.
10	SCKO	O	Serial clock output to RF5C241.
11	SDTI	I	Serial data input from RF5C241.
12	SDTO	O	Serial data output to RF5C241.
13	XRSM	I	RESUME switch input. "L": RESUME ON "H": RESUME OFF
14	XHOLD	I	HOLD switch input. "L": HOLD ON "H": HOLD OFF (Canceled)
15	XLIM	I	Limit switch input. "L": ON "H": OFF
16	XDM10	I	Rechargeable battery (BP-DM10) connected detecting switch input. "L": There is rechargeable battery. "H": There is not rechargeable battery.
17	XORG	I	DSPILM/SRRILM output select switch input.
18	XESP	I	ESP switch input. "L": ESP ON "H": ESP OFF
19	XTEST	I	Test mode at "L" level input on system reset.
20	PCON	O	Servo system power supply control output. "L": Power on. "H": Power off.
21		—	Not used.
22	FOK	I	FOK signal input from BA6373K.
23	BUSY	I	Busy signal input from BU9310BKS.
24		—	Not used.
25	CHGMNT	I	Battery (BP-DM10) charging voltage detect A/D input.
26	BATMNT	I	Battery (BP-DM10/AM-3) voltage detect A/D input.
27	VCCMNT	I	Servo system power supply voltage detect A/D input.
28	RMKEY	I	FR, FF, PLAY/PAUSE, DSP STOP switches on phones remote controller A/D input.
29	KEY	I	PLAY/PAUSE, STOP, FF, FR, REPEAT/ENTER, PLAY MODE, DSP, SURROUND switches A/D input.
30	XMCRST	I	System reset input. Reset at "L" level.
31	EXTAL	—	Connected to clock oscillating circuit.
32	XTAL		
33	VSS	—	Ground
34	VL	O	On standby, controls to cut off current flowing external LCD bias resistor.
35 – 37	VCL3 – VCL1	—	Supplies LCD bias power supply voltage.
38 – 41	COM0 – CMO3	O	LCD common signal output.

Pin No.	Pin Name	I/O	Function
42 – 57	S00 – S15	O	LCD segment signal output.
58	RW	O	RW signal output for serial communication to BU9310BKS.
59	CLV_MT	O	CLV mute control output. "L": Mute
60	ESP	O	Not used. (ESP state output.) "H": ESP ON "L": ESP OFF
61	XSOE	O	Not used. (Serial data output enable signal for RF5C241 output.)
62	X241LT	O	Not used. (Latch signal output on sending serial data to RF5C241.)
63	DSPILM	O	Color select of LED for DSP output. XORG: H / L DSP ON: L / H DSP OFF: H / L
64	SRRILM	O	Color select of LED for surround output. XORG: H / L SURROUND ON: L / H SURROUND OFF: H / L
65	OPNILM	O	Output to control LED for light hold on/off. "L": Play "H": Disc stop
66	C2POEN	O	Not used. (S-RAM Over-flow signal mute "H": Mute on.)
67	XCHG	O	Battery (BP-DM10) charging control output. "L": Charge
68	SRR0	O	Surround control output. Indication: None / ((SUR)) / ((((SUR)))) SRR0: H / L / L SRR1: L / H / L
69	SRR1		
70	AMUT	O	Mute control output. "H": Mute
71	DMUT	O	Mute control for SM5853BF. "H": Mute
72	VDD	—	Power supply.
73	TX	—	Not used.
74	TEX	—	Not used. (Ground)
75	NC	—	Not used.
76	RMDTO	O	Serial data output to LCD remote controller.
77	XAULT	O	Latch signal output on sending serial data to SM5853F.
78	SCOR	I	SCOR signal input from BU9310BKS.
79	RMCKI	I	Clock signal (for data output) is fed from LCD remote controller. When detecting its falling edge, data is renewed.
80	WP	I	Input for releasing stop state of system. Stop state is released at falling edge ( ) of input.

SECTION 5
EXPLODED VIEWS

NOTE:

- -XX and -X mean standardized parts, so they may have some difference from the original one.
- Color Indication of Appearance Parts
  Example:
  KNOB, BALANCE (WHITE) . . . (RED)
  ↑ Parts Color ↑ Cabinet's Color
- Items marked "*" are not stocked since they are seldom required for routine service. Some delay should be anticipated when ordering these items.
- The mechanical parts with no reference number in the exploded views are not supplied.
- Hardware (# mark) list and accessories and packing materials are given in the last of the electrical parts list.

The components identified by mark ⚠ or dotted line with mark ⚠ are critical for safety.
Replace only with part number specified.

Les composants identifiés par une marque ⚠ sont critiques pour la sécurité.
Ne les remplacer que par une pièce portant le neméro spécifié.

(1) CABINET SECTION-1

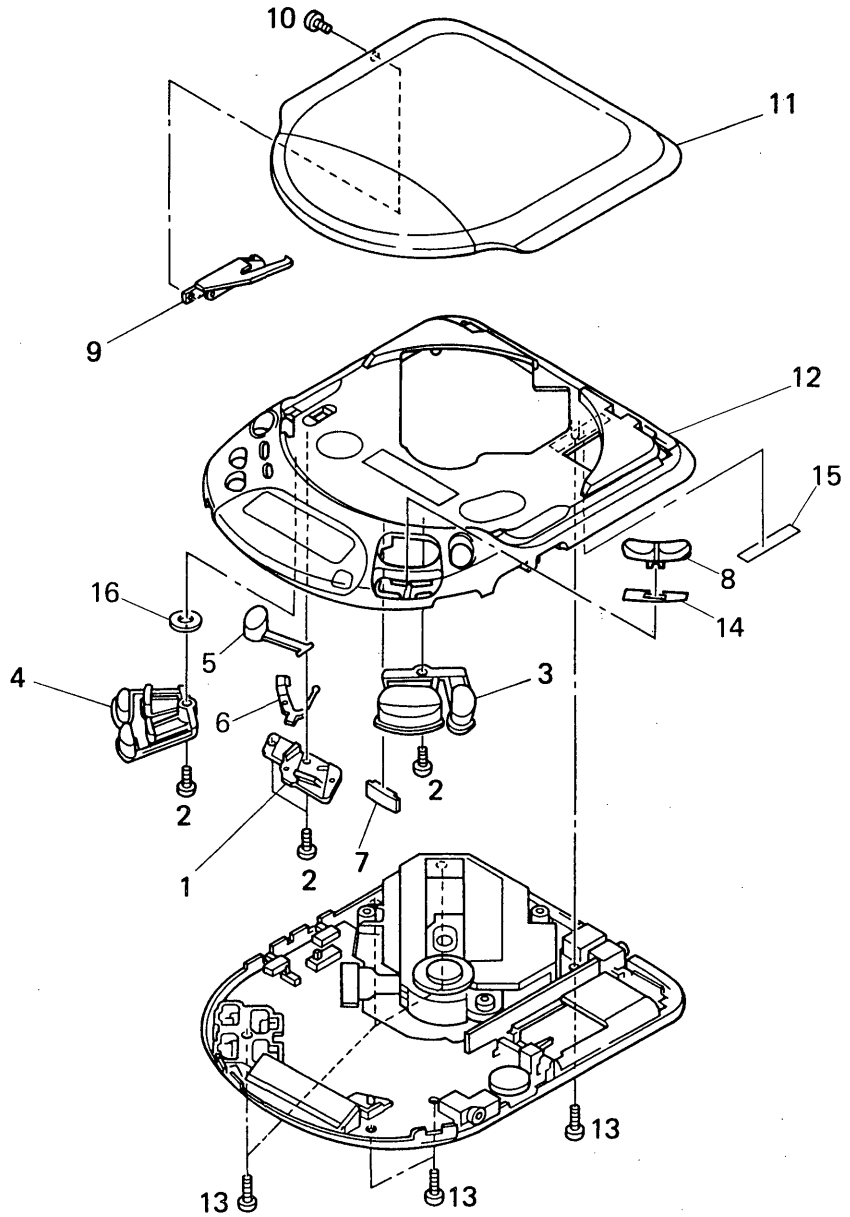

Ref. No.	Part No.	Description	Remark
1	4-959-436-01	RETAINER (OPEN)	
2	3-374-079-11	SCREW (1.7X5), TAPPING	
3	4-959-429-11	BUTTON (PLAY)	
4	4-959-416-01	BUTTON (MODE)	
5	4-959-433-11	BUTTON (OPEN)	
6	4-959-435-01	CLAW, LOCK	
7	4-959-417-01	LENS	
8	4-959-438-11	BUTTON (FR)	
9	X-4943-816-1	ARM ASSY, SWITCHING	
10	3-704-197-32	SCREW (M1.4X3.0)	
11	4-959-444-31	LID, UPPER	
12	X-4945-097-1	CABINET (UPPER) ASSY	
13	3-336-395-01	SCREW (B2X10) (G), TAPPING	
14	*4-962-069-01*	*SHEET (FR) (NEW)*	
15	4-970-677-01	CUSHION (NEW)	
16	4-962-572-21	WASHER, POLYETHYLENE, DIA. 3.2 (NEW)	

(2) CABINET SECTION-2

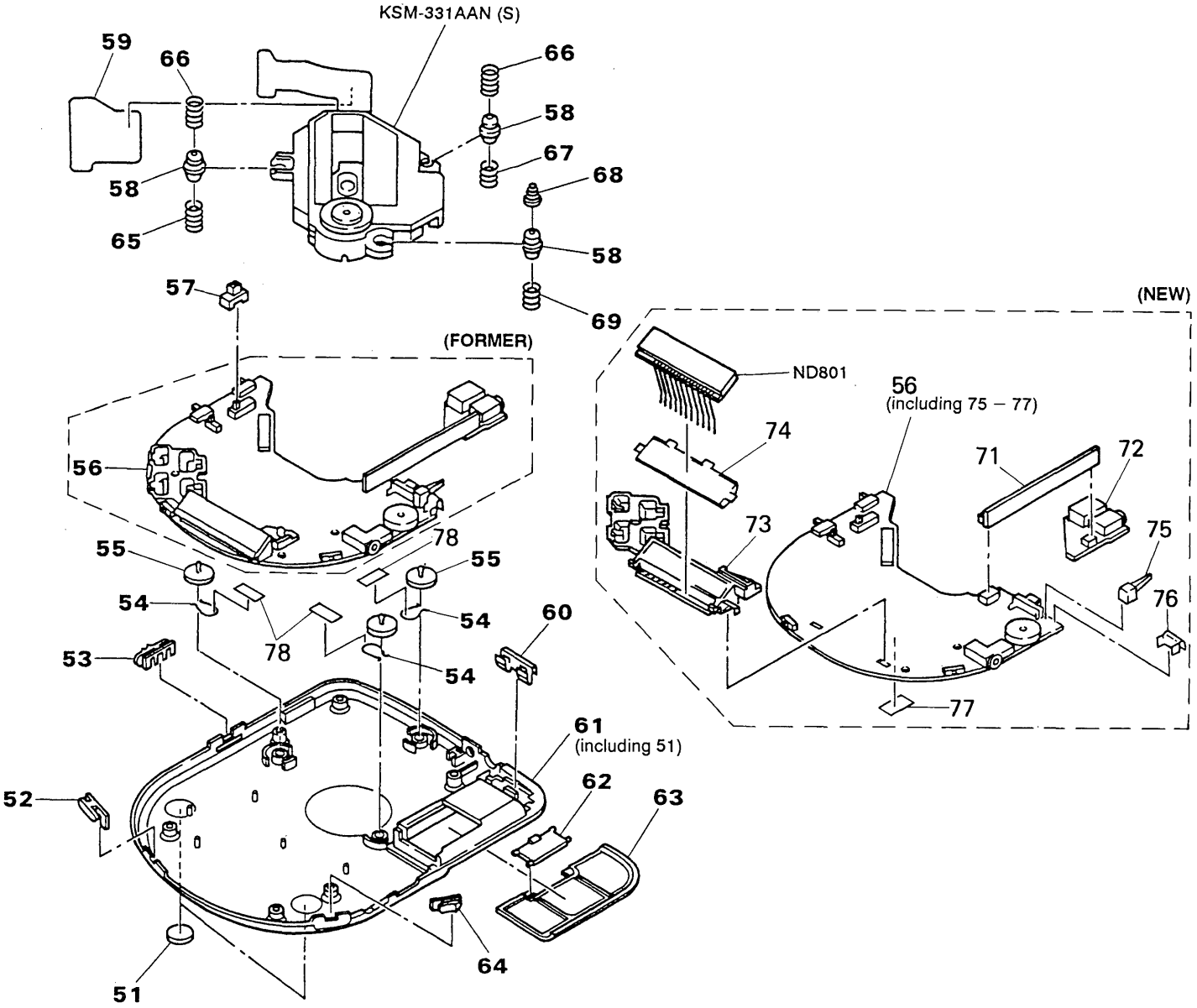

Ref. No.	Part No.	Description	Remark
51	4-912-641-01	FOOT, RUBBER	
52	4-959-439-11	KNOB (HOLD)	
53	4-959-431-11	KNOB (IRUMI)	
54	4-959-428-01	SPRING (BUSHING)	
55	4-959-418-01	BUSHING	
56	A-3264-580-A	MAIN BOARD, COMPLETE (FORMER)	
56	A-3276-526-A	MAIN BOARD, COMPLETE (NEW)	
57	4-959-434-01	KNOB (RESUME)	
58	4-959-412-01	INSULATOR, OIL	
59	4-956-818-01	RETAINER, FLEXIBLE	
60	4-959-419-01	TERMINAL BOARD (RELAY), BATTERY	
61	X-4945-110-1	CABINET (LOWER) ASSY	
62	4-959-414-11	HINGE, BATTERY	
63	4-959-413-11	LID, BATTERY CASE	
64	4-959-437-11	KNOB (AVLS)	

Ref. No.	Part No.	Description	Remark
65	4-959-425-11	SPRING, COMPRESSION	
66	4-961-120-01	SPRING (C) (UPPER), COIL	
67	4-959-425-01	SPRING, COMPRESSION	
68	4-961-118-01	SPRING (A) (UPPER), COIL	
69	4-959-424-01	SPRING, COMPRESSION	
* 71	1-653-497-11	CN BOARD (NEW)	
* 72	1-653-498-11	JACK BOARD (NEW)	
* 73	4-959-430-11	HOLDER (LCD) (NEW)	
74	4-959-423-01	PLATE (LCD), LIGHT GUIDE (NEW)	
75	X-4943-819-1	TERMINAL ASSY, BATTERY (NEW)	
76	4-959-421-01	TERMINAL BOARD (+), BATTERY (NEW)	
77	3-831-441-XX	SPACER, KNOB (NEW)	
78	3-831-441-11	SHEET (NEW)	
ND801	1-810-589-11	DISPLAY PANEL, LIQUID CRYSTAL (NEW)	

(3) OPTICAL PICK-UP BLOCK SECTION (KSM-331AAN (S))

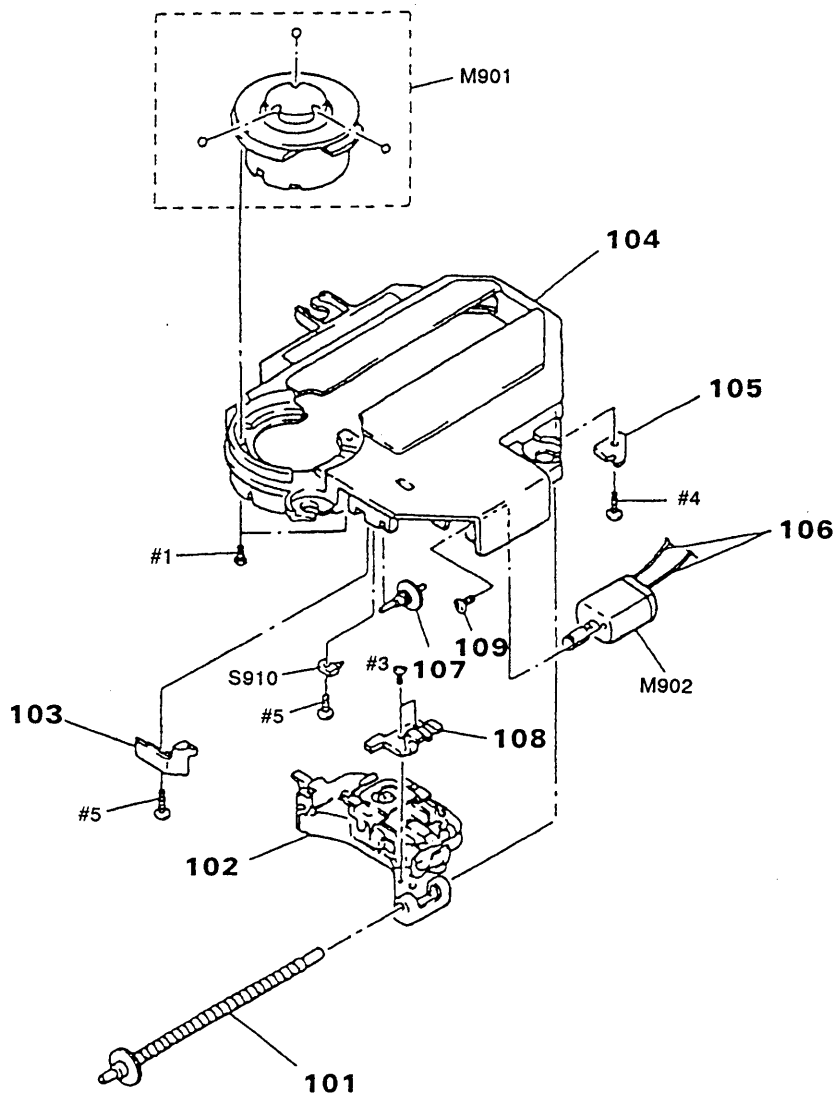

Note:	Note:
The components identified by mark ⚠ or dotted line with mark ⚠ are critical for safety. Replace only with part number specified.	Les composants identifiés par une marque ⚠ sont critiques pour la sécurité. Ne les remplacer que par une pièce portant le neméro spécifié.

Ref. No.	Part No.	Description	Remark
101	X-2625-483-1	SCREW ASSY, SLED	
⚠102	8-848-289-31	DEVICE, OPTICAL KSS-331A	
103	2-625-412-02	SPRING, SLED	
104	2-625-415-02	CHASSIS, MD	
105	2-625-411-01	RETAINER, SHAFT	
106	1-948-418-21	HARNESS	
107	2-625-410-01	GEAR (B)	
108	2-625-414-02	RACK	
109	3-732-988-01	SCREW (M2X2.5)	
M901	X-2625-485-1	MOTOR ASSY, T.T.	
M902	X-2625-171-2	MOTOR ASSY, SLED	
S910	1-570-771-11	SWITCH (LIMIT SW)	

CN JACK MAIN

SECTION 6
ELECTRICAL PARTS LIST

NOTE:
- Due to standardization, replacements in the parts list may be different from the parts specified in the diagrams or the components used on the set.
- -XX and -X mean standardized parts, so they may have some difference from the original one.
- RESISTORS
  All resistors are in ohms.
  METAL:Metal-film resistor.
  METAL OXIDE: Metal oxide-film resistor.
  F:nonflammable
- Items marked "*" are not stocked since they are seldom required for routine service. Some delay should be anticipated when ordering these items.
- SEMICONDUCTORS
  In each case, u:μ, for example:
  uA..: μA.. uPA..: μPA..
  uPB..: μPB.. uPC..: μPC.. uPD..: μPD..
- CAPACITORS
  uF: μF
- COILS
  uH: μH

When indicating parts by reference number, please include the board.

The components identified by mark ⚠ or dotted line with mark ⚠ are critical for safety. Replace only with part number specified.

Les composants identifiés par une marque ⚠ sont critiques pour la sécurité. Ne les remplacer que par une pièce portant le numéro spécifié.

Ref. No.	Part No.	Description			Remark
*	1-653-497-11	CN BOARD			
		********			
		< CONNECTOR >			
CN402	1-568-362-11	CONNECTOR, BOARD TO BOARD 6P			
CN403	1-568-362-11	CONNECTOR, BOARD TO BOARD 6P			
		< COIL >			
L304	1-410-997-31	INDUCTOR CHIP	2.2uH		
		< RESISTOR >			
R122	1-216-813-11	METAL CHIP	220	5%	1/16W
R222	1-216-813-11	METAL CHIP	220	5%	1/16W
**********					
*	1-653-498-11	JACK BOARD			
		**********			
		< CAPACITOR >			
C115	1-162-964-11	CERAMIC CHIP	0.001uF	10%	50V
C215	1-162-964-11	CERAMIC CHIP	0.001uF	10%	50V
C416	1-164-360-11	CERAMIC CHIP	0.1uF		16V
C417	1-164-360-11	CERAMIC CHIP	0.1uF		16V
		< CONNECTOR >			
CN404	1-568-330-11	CONNECTOR, BOARD TO BOARD 6P			
		< DIODE >			
D102	8-719-039-99	DIODE	UMZ8.2T-T106		
D202	8-719-039-99	DIODE	UMZ8.2T-T106		
		< JACK >			
J301	1-565-287-41	JACK (LINE OUT)			
J401	1-568-907-21	JACK, DC(POLARITY UNIFIED TYPE)(DC IN 4.5)			
		< COIL >			
L102	1-410-997-31	INDUCTOR CHIP	2.2uH		
L202	1-410-997-31	INDUCTOR CHIP	2.2uH		
		< RESISTOR >			
R334	1-216-809-11	METAL CHIP	100	5%	1/16W
**********					
	A-3276-526-A	MAIN BOARD, COMPLETE			
		**********			
	3-831-441-XX	SPACER, KNOB			
	4-959-421-01	TERMINAL BOARD (+), BATTERY			
	4-959-423-01	PLATE (LCD), LIGHT GUIDE			
*	4-959-430-11	HOLDER (LCD)			
		< CAPACITOR >			
C101	1-164-816-11	CERAMIC CHIP	220PF	2%	50V
C102	1-162-928-11	CERAMIC CHIP	120PF	5%	50V
C103	1-162-928-11	CERAMIC CHIP	120PF	5%	50V
C104	1-162-924-11	CERAMIC CHIP	56PF	5%	50V
C105	1-162-924-11	CERAMIC CHIP	56PF	5%	50V
C106	1-135-181-21	TANTALUM CHIP	4.7uF	20%	6.3V
C107	1-162-964-11	CERAMIC CHIP	0.001uF	10%	50V
C108	1-135-091-00	TANTAL. CHIP	1uF	20%	16V
C109	1-164-222-11	CERAMIC CHIP	0.22uF		25V
C110	1-162-945-11	CERAMIC CHIP	22PF	5%	50V
C111	1-162-953-11	CERAMIC CHIP	100PF	5%	50V
C113	1-126-608-11	ELECT	330uF	20%	2V
C114	1-135-091-00	TANTAL. CHIP	1uF	20%	16V
C201	1-164-816-11	CERAMIC CHIP	220PF	2%	50V
C202	1-162-928-11	CERAMIC CHIP	120PF	5%	50V
C203	1-162-928-11	CERAMIC CHIP	120PF	5%	50V
C204	1-162-924-11	CERAMIC CHIP	56PF	5%	50V
C205	1-162-924-11	CERAMIC CHIP	56PF	5%	50V
C206	1-135-181-21	TANTALUM CHIP	4.7uF	20%	6.3V
C207	1-162-964-11	CERAMIC CHIP	0.001uF	10%	50V
C208	1-135-091-00	TANTAL. CHIP	1uF	20%	16V
C209	1-164-222-11	CERAMIC CHIP	0.22uF		25V
C210	1-162-945-11	CERAMIC CHIP	22PF	5%	50V
C211	1-162-953-11	CERAMIC CHIP	100PF	5%	50V
C212	1-162-953-11	CERAMIC CHIP	100PF	5%	50V
C213	1-126-608-11	ELECT	330uF	20%	2V
C214	1-135-091-00	TANTAL. CHIP	1uF	20%	16V

Ref. No.	Part No.	Description			Remark
C301	1-162-945-11	CERAMIC CHIP	22PF	5%	50V
C302	1-162-947-11	CERAMIC CHIP	33PF	5%	50V
C303	1-164-346-11	CERAMIC CHIP	1uF		16V
C304	1-164-346-11	CERAMIC CHIP	1uF		16V
C305	1-164-346-11	CERAMIC CHIP	1uF		16V
C306	1-164-346-11	CERAMIC CHIP	1uF		16V
C307	1-164-346-11	CERAMIC CHIP	1uF		16V
C308	1-126-207-11	ELECT CHIP	33uF	20%	4V
C309	1-164-360-11	CERAMIC CHIP	0.1uF		16V
C310	1-162-964-11	CERAMIC CHIP	0.001uF	10%	50V
C311	1-164-346-11	CERAMIC CHIP	1uF		16V
C312	1-164-346-11	CERAMIC CHIP	1uF		16V
C313	1-104-847-11	TANTAL. CHIP	22uF	20%	4V
C314	1-164-346-11	CERAMIC CHIP	1uF		16V
C315	1-104-847-11	TANTAL. CHIP	22uF	20%	4V
C317	1-135-201-11	TANTALUM CHIP	10uF	20%	4V
C318	1-104-847-11	TANTAL. CHIP	22uF	20%	4V
C319	1-104-847-11	TANTAL. CHIP	22uF	20%	4V
C320	1-164-346-11	CERAMIC CHIP	1uF		16V
C321	1-164-346-11	CERAMIC CHIP	1uF		16V
C324	1-163-038-00	CERAMIC CHIP	0.1uF		25V
C334	1-124-778-00	ELECT CHIP	22uF	20%	6.3V
C335	1-162-964-11	CERAMIC CHIP	0.001uF	10%	50V
C336	1-162-964-11	CERAMIC CHIP	0.001uF	10%	50V
C338	1-164-505-11	CERAMIC CHIP	2.2uF		16V
C339	1-104-847-11	TANTAL. CHIP	22uF	20%	4V
C340	1-162-953-11	CERAMIC CHIP	100PF	5%	50V
C341	1-164-360-11	CERAMIC CHIP	0.1uF		16V
C342	1-164-360-11	CERAMIC CHIP	0.1uF		16V
C343	1-162-964-11	CERAMIC CHIP	0.001uF	10%	50V
C344	1-162-953-11	CERAMIC CHIP	100PF	5%	50V
C347	1-135-210-11	TANTALUM CHIP	4.7uF	20%	10V
C349	1-164-346-11	CERAMIC CHIP	1uF		16V
C350	1-162-964-11	CERAMIC CHIP	0.001uF	10%	50V
C401	1-127-561-11	ELECT(SOLID)	33uF	20%	10V
C402	1-164-360-11	CERAMIC CHIP	0.1uF		16V
C403	1-164-492-11	CERAMIC CHIP	0.15uF	10%	16V
C404	1-127-561-11	ELECT(SOLID)	33uF	20%	10V
C405	1-162-949-11	CERAMIC CHIP	47PF	5%	50V
C406	1-164-360-11	CERAMIC CHIP	0.1uF		16V
C407	1-128-241-11	ELECT	220uF	20%	10V
C408	1-162-947-11	CERAMIC CHIP	33PF	5%	50V
C409	1-164-360-11	CERAMIC CHIP	0.1uF		16V
C411	1-164-346-11	CERAMIC CHIP	1uF		16V
C412	1-135-155-21	TANTALUM CHIP	4.7uF	10%	16V
C413	1-163-038-00	CERAMIC CHIP	0.1uF		25V
C414	1-162-970-11	CERAMIC CHIP	0.01uF	10%	25V
C415	1-104-851-11	TANTAL. CHIP	10uF	20%	10V

Ref. No.	Part No.	Description			Remark
C501	1-164-360-11	CERAMIC CHIP	0.1uF		16V
C502	1-135-318-11	TANTAL. CHIP	33uF	20%	4V
C503	1-164-360-11	CERAMIC CHIP	0.1uF		16V
C504	1-164-360-11	CERAMIC CHIP	0.1uF		16V
C505	1-126-607-11	ELECT CHIP	47uF	20%	4V
C506	1-164-457-11	CERAMIC CHIP	30PF	5%	50V
C507	1-164-360-11	CERAMIC CHIP	0.1uF		16V
C508	1-162-970-11	CERAMIC CHIP	0.01uF	10%	25V
C509	1-164-677-11	CERAMIC CHIP	0.033uF	10%	16V
C510	1-162-967-11	CERAMIC CHIP	0.0033uF	10%	50V
C511	1-164-489-11	CERAMIC CHIP	0.22uF	10%	16V
C512	1-164-004-11	CERAMIC CHIP	0.1uF	10%	25V
C513	1-135-180-21	TANTALUM CHIP	3.3uF	20%	6.3V
C514	1-126-209-11	ELECT	100uF	20%	4V
C515	1-164-360-11	CERAMIC CHIP	0.1uF		16V
C516	1-163-809-11	CERAMIC CHIP	0.047uF	10%	25V
C517	1-164-489-11	CERAMIC CHIP	0.22uF	10%	16V
C518	1-164-217-11	CERAMIC CHIP	150PF	5%	50V
C519	1-135-181-21	TANTALUM CHIP	4.7uF	20%	6.3V
C520	1-162-966-11	CERAMIC CHIP	0.0022uF	10%	50V
C521	1-164-005-11	CERAMIC CHIP	0.47uF		25V
C522	1-164-344-11	CERAMIC CHIP	0.068uF	10%	25V
C523	1-162-964-11	CERAMIC CHIP	0.001uF	10%	50V
C524	1-162-966-11	CERAMIC CHIP	0.0022uF	10%	50V
C525	1-162-964-11	CERAMIC CHIP	0.001uF	10%	50V
C526	1-135-318-11	TANTAL. CHIP	33uF	20%	4V
C528	1-164-489-11	CERAMIC CHIP	0.22uF	10%	16V
C529	1-164-489-11	CERAMIC CHIP	0.22uF	10%	16V
C530	1-164-489-11	CERAMIC CHIP	0.22uF	10%	16V
C531	1-104-847-11	TANTAL. CHIP	22uF	20%	4V
C532	1-162-932-11	CERAMIC CHIP	2PF	0.25PF	50V
C533	1-104-847-11	TANTAL. CHIP	22uF	20%	4V
C534	1-164-227-11	CERAMIC CHIP	0.022uF	10%	25V
C535	1-164-004-11	CERAMIC CHIP	0.1uF	10%	25V
C537	1-104-851-11	TANTAL. CHIP	10uF	20%	10V
C538	1-126-194-21	ELECT	1.5uF	20%	50V
C539	1-164-360-11	CERAMIC CHIP	0.1uF		16V
C540	1-104-852-11	TANTAL. CHIP	22uF	20%	10V
C541	1-164-346-11	CERAMIC CHIP	1uF		16V
C542	1-162-968-11	CERAMIC CHIP	0.0047uF	10%	50V
C543	1-164-360-11	CERAMIC CHIP	0.1uF		16V
C544	1-164-346-11	CERAMIC CHIP	1uF		16V
C545	1-164-473-11	CERAMIC CHIP	820PF	5%	50V
C546	1-164-346-11	CERAMIC CHIP	1uF		16V
C547	1-164-222-11	CERAMIC CHIP	0.22uF		25V
C548	1-164-360-11	CERAMIC CHIP	0.1uF		16V
C549	1-164-346-11	CERAMIC CHIP	1uF		16V
C550	1-164-005-11	CERAMIC CHIP	0.47uF		25V
C551	1-104-847-11	TANTAL. CHIP	22uF	20%	4V

MAIN

Ref. No.	Part No.	Description			Remark
C552	1-104-851-11	TANTAL. CHIP	10uF	20%	10V
C553	1-126-194-21	ELECT	1.5uF	20%	50V
C554	1-164-360-11	CERAMIC CHIP	0.1uF		16V
C555	1-164-360-11	CERAMIC CHIP	0.1uF		16V
C559	1-164-222-11	CERAMIC CHIP	0.22uF		25V
C562	1-162-913-11	CERAMIC CHIP	8PF	0.5PF	50V
C563	1-162-913-11	CERAMIC CHIP	8PF	0.5PF	50V
C564	1-162-966-11	CERAMIC CHIP	0.0022uF	10%	50V
C805	1-135-181-21	TANTALUM CHIP	4.7uF	20%	6.3V
C806	1-124-779-00	ELECT CHIP	10uF	20%	16V
C807	1-164-346-11	CERAMIC CHIP	1uF		16V
C809	1-162-970-11	CERAMIC CHIP	0.01uF	10%	25V
C816	1-164-346-11	CERAMIC CHIP	1uF		16V

< CONNECTOR >

CN401	1-568-330-11	CONNECTOR, BOARD TO BOARD 6P	
CN501	1-566-534-11	CONNECTOR, FPC (ZIF) 18P	
* CN502	1-695-320-51	PIN, CONNECTOR (1.5MM)(SMD) 2P	
* CN503	1-695-320-31	PIN, CONNECTOR (1.5MM)(SMD) 2P	
* CN504	1-695-320-21	PIN, CONNECTOR (1.5MM)(SMD) 2P	

< DIODE >

D101	8-719-039-99	DIODE	UMZ8.2T
D201	8-719-039-99	DIODE	UMZ8.2T
D301	8-719-049-11	DIODE	1SS377-TE85L
D302	8-719-941-86	DIODE	DAN202U
D307	8-719-941-86	DIODE	DAN202U
D308	8-719-422-46	DIODE	MA8056
D401	8-719-049-09	DIODE	1SS367-T3SONY
D402	8-719-975-33	DIODE	RB110C
D403	8-719-975-33	DIODE	RB110C
D404	8-719-975-33	DIODE	RB110C
D405	8-719-938-72	DIODE	SB01-05CP
D406	8-719-938-75	DIODE	SB05-05CP
D407	8-719-941-86	DIODE	DAN202U
D501	8-719-049-11	DIODE	1SS377-TE85L
D502	8-719-049-09	DIODE	1SS367-T3SONY
D503	8-719-049-10	DIODE	1SS374-TE85L
D506	8-719-977-34	DIODE	DTZ12
D507	8-719-049-09	DIODE	1SS367-T3SONY
D508	8-719-422-46	DIODE	MA8056
D802	8-719-941-09	DIODE	DAP202U
D804	8-719-941-86	DIODE	DAN202U
D901	8-719-049-09	DIODE	1SS367-T3SONY
D902	8-719-987-45	DIODE	CL-155Y/PG-CD (LCD BACK LIGHT)
D903	8-719-987-45	DIODE	CL-155Y/PG-CD (LCD BACK LIGHT)
D904	8-719-987-45	DIODE	CL-155Y/PG-CD (LCD BACK LIGHT)
D905	8-719-987-45	DIODE	CL-155Y/PG-CD (LCD BACK LIGHT)
D906	8-719-987-45	DIODE	CL-155Y/PG-CD (LCD BACK LIGHT)
D907	8-719-987-45	DIODE	CL-155Y/PG-CD (⏮)
D908	8-719-987-45	DIODE	CL-155Y/PG-CD (⏭)
D909	8-719-987-45	DIODE	CL-155Y/PG-CD (▶II)
D910	8-719-987-45	DIODE	CL-155Y/PG-CD (▶II)
D911	8-719-987-45	DIODE	CL-155Y/PG-CD (■ STOP/DISPLAY OFF)
D912	8-719-987-45	DIODE	CL-155Y/PG-CD (REPEAT/ENTER)
D913	8-719-987-45	DIODE	CL-155Y/PG-CD (PLAY MODE)
D914	8-719-987-45	DIODE	CL-155Y/PG-CD (SURROUND)
D915	8-719-987-45	DIODE	CL-155Y/PG-CD (DSP)
D916	8-719-987-45	DIODE	CL-155Y/PG-CD (OPEN)
D917	8-719-987-45	DIODE	CL-155Y/PG-CD (OPEN)

< FERRITE BEAD >

FB101	1-550-907-21	BEAD, FERRITE (CHIP)
FB201	1-550-907-21	BEAD, FERRITE (CHIP)
FB301	1-550-907-21	BEAD, FERRITE (CHIP)
FB302	1-550-907-21	BEAD, FERRITE (CHIP)
FB303	1-550-907-21	BEAD, FERRITE (CHIP)

< IC >

IC301	8-759-177-67	IC	SM5853BF
IC302	8-759-097-92	IC	NJM2100V
IC303	8-759-285-22	IC	BA3574AFS-T1
IC304	8-759-161-75	IC	NJM2112V(TE2)
IC401	8-759-176-73	IC	RS5RJ32271-T1
IC402	8-759-097-92	IC	NJM2100V
IC501	8-759-293-60	IC	BA6373AK
IC502	8-759-193-61	IC	BU9310BKS
IC503	8-759-097-92	IC	NJM2100V
IC504	8-759-031-84	IC	SC7S04F
IC506	8-759-264-81	IC	LH5116ZE
IC507	8-759-263-14	IC	SC111281LFU
IC801	8-752-858-32	IC	CXP83412-009Q

< JACK >

J302	1-580-680-11	JACK (Ω/REMOTE)

< JUMPER RESISTOR >

JC301	1-216-295-00	CONDUCTOR, CHIP			
JC501	1-216-864-11	METAL CHIP	0	5%	1/16W
JC502	1-216-864-11	METAL CHIP	0	5%	1/16W
JC503	1-216-864-11	METAL CHIP	0	5%	1/16W
JC504	1-216-864-11	METAL CHIP	0	5%	1/16W
JC902	1-216-864-11	METAL CHIP	0	5%	1/16W

Ref. No.	Part No.	Description		Remark
		< COIL >		
L301	1-410-997-31	INDUCTOR CHIP	2.2uH	
L302	1-410-997-31	INDUCTOR CHIP	2.2uH	
L305	1-410-997-31	INDUCTOR CHIP	2.2uH	
L401	1-412-622-51	INDUCTOR	10uH	
L402	1-412-622-51	INDUCTOR	10uH	
L502	1-414-398-11	INDUCTOR	10uH	
L503	1-414-398-11	INDUCTOR	10uH	
L504	1-414-398-11	INDUCTOR	10uH	
L505	1-414-402-11	INDUCTOR	47uH	
L506	1-414-402-11	INDUCTOR	47uH	
L507	1-414-402-11	INDUCTOR	47uH	
L508	1-414-402-11	INDUCTOR	47uH	
L509	1-414-398-11	INDUCTOR	10uH	
		< LIQUID CRYSTAL DISPLAY >		
ND801	1-810-589-11	DISPLAY PANEL, LIQUID CRYSTAL		
		< PILOT LAMP >		
PL901	1-518-259-00	LAMP, PILOT		
		< TRANSISTOR >		
Q101	8-729-023-22	TRANSISTOR	2SD2114KT146	
Q201	8-729-023-22	TRANSISTOR	2SD2114KT146	
Q301	8-729-904-86	TRANSISTOR	2SB1197K-Q	
Q302	8-729-402-13	TRANSISTOR	XN1501	
Q303	8-729-907-39	TRANSISTOR	IMD2	
Q304	8-729-014-12	TRANSISTOR	RN1311-TE85L	
Q307	8-729-402-13	TRANSISTOR	XN1501	
Q308	8-729-101-07	TRANSISTOR	2SB798-DL	
Q311	8-729-403-17	TRANSISTOR	XN1215	
Q312	8-729-403-45	TRANSISTOR	XN1115	
Q401	8-729-014-18	TRANSISTOR	RN2303-TE85L	
Q402	8-729-022-67	TRANSISTOR	2SC3650-TD	
Q403	8-729-923-36	TRANSISTOR	2SD1963-Q.R	
Q408	8-729-922-34	TRANSISTOR	2SD1758F5-QR	
Q409	8-729-402-32	TRANSISTOR	2SD1819A-R	
Q410	8-729-403-02	TRANSISTOR	XN4212	
Q411	8-729-014-18	TRANSISTOR	RN2303-TE85L	
Q412	8-729-920-56	TRANSISTOR	FMG1	
Q413	8-729-014-18	TRANSISTOR	RN2303-TE85L	
Q501	8-729-904-86	TRANSISTOR	2SB1197K-Q	
Q503	8-729-014-34	TRANSISTOR	RN2311-TE85L	
Q801	8-729-402-32	TRANSISTOR	2SD1819A-R	
Q901	8-729-806-75	TRANSISTOR	2SB1120	
Q903	8-729-402-13	TRANSISTOR	XN1501	
Q904	8-729-924-79	TRANSISTOR	FMG8	
Q905	8-729-402-13	TRANSISTOR	XN1501	
Q906	8-729-924-79	TRANSISTOR	FMG8	
Q907	8-729-402-13	TRANSISTOR	XN1501	
Q908	8-729-924-79	TRANSISTOR	FMG8	
Q909	8-729-141-75	TRANSISTOR	2SD596DV345	
Q910	8-729-402-45	TRANSISTOR	UN5212	
Q911	8-729-141-75	TRANSISTOR	2SD596DV345	
		< RESISTOR >		
R101	1-216-834-11	METAL CHIP	12K 5%	1/16W
R102	1-216-834-11	METAL CHIP	12K 5%	1/16W
R103	1-216-837-11	METAL CHIP	22K 5%	1/16W
R104	1-216-837-11	METAL CHIP	22K 5%	1/16W
R105	1-216-846-11	METAL CHIP	120K 5%	1/16W
R106	1-216-839-11	METAL CHIP	33K 5%	1/16W
R107	1-216-839-11	METAL CHIP	33K 5%	1/16W
R108	1-216-843-11	METAL CHIP	68K 5%	1/16W
R109	1-216-843-11	METAL CHIP	68K 5%	1/16W
R111	1-216-845-11	METAL CHIP	100K 5%	1/16W
R112	1-216-843-11	METAL CHIP	68K 5%	1/16W
R113	1-216-823-11	METAL CHIP	1.5K 5%	1/16W
R114	1-216-789-11	METAL CHIP	2.2 5%	1/16W
R115	1-216-833-11	METAL CHIP	10K 5%	1/16W
R116	1-216-821-11	METAL CHIP	1K 5%	1/16W
R117	1-216-843-11	METAL CHIP	68K 5%	1/16W
R118	1-216-839-11	METAL CHIP	33K 5%	1/16W
R119	1-216-832-11	METAL CHIP	8.2K 5%	1/16W
R120	1-216-837-11	METAL CHIP	22K 5%	1/16W
R121	1-216-837-11	METAL CHIP	22K 5%	1/16W
R123	1-216-815-11	METAL CHIP	330 5%	1/16W
R201	1-216-834-11	METAL CHIP	12K 5%	1/16W
R202	1-216-834-11	METAL CHIP	12K 5%	1/16W
R203	1-216-837-11	METAL CHIP	22K 5%	1/16W
R204	1-216-837-11	METAL CHIP	22K 5%	1/16W
R205	1-216-846-11	METAL CHIP	120K 5%	1/16W
R206	1-216-839-11	METAL CHIP	33K 5%	1/16W
R207	1-216-839-11	METAL CHIP	33K 5%	1/16W
R208	1-216-843-11	METAL CHIP	68K 5%	1/16W
R209	1-216-843-11	METAL CHIP	68K 5%	1/16W
R211	1-216-845-11	METAL CHIP	100K 5%	1/16W
R212	1-216-843-11	METAL CHIP	68K 5%	1/16W
R213	1-216-823-11	METAL CHIP	1.5K 5%	1/16W
R214	1-216-789-11	METAL CHIP	2.2 5%	1/16W
R215	1-216-833-11	METAL CHIP	10K 5%	1/16W
R216	1-216-821-11	METAL CHIP	1K 5%	1/16W
R217	1-216-843-11	METAL CHIP	68K 5%	1/16W
R218	1-216-839-11	METAL CHIP	33K 5%	1/16W
R219	1-216-843-11	METAL CHIP	68K 5%	1/16W
R220	1-216-837-11	METAL CHIP	22K 5%	1/16W

MAIN

Ref. No.	Part No.	Description			Remark
R221	1-216-837-11	METAL CHIP	22K	5%	1/16W
R223	1-216-815-11	METAL CHIP	330	5%	1/16W
R301	1-216-001-00	METAL CHIP	10	5%	1/10W
R303	1-216-833-11	METAL CHIP	10K	5%	1/16W
R304	1-216-845-11	METAL CHIP	100K	5%	1/16W
R305	1-216-825-11	METAL CHIP	2.2K	5%	1/16W
R306	1-218-716-11	METAL CHIP	10K	0.50%	1/16W
R307	1-216-817-11	METAL CHIP	470	5%	1/16W
R308	1-216-827-11	METAL CHIP	3.3K	5%	1/16W
R309	1-216-825-11	METAL CHIP	2.2K	5%	1/16W
R310	1-216-833-11	METAL CHIP	10K	5%	1/16W
R311	1-216-831-11	METAL CHIP	6.8K	5%	1/16W
R312	1-216-831-11	METAL CHIP	6.8K	5%	1/16W
R317	1-216-817-11	METAL CHIP	470	5%	1/16W
R318	1-216-821-11	METAL CHIP	1K	5%	1/16W
R319	1-216-835-11	METAL CHIP	15K	5%	1/16W
R320	1-216-823-11	METAL CHIP	1.5K	5%	1/16W
R321	1-218-345-11	METAL GLAZE	9.1K	5%	1/16W
R322	1-216-821-11	METAL CHIP	1K	5%	1/16W
R323	1-216-825-11	METAL CHIP	2.2K	5%	1/16W
R324	1-216-845-11	METAL CHIP	100K	5%	1/16W
R325	1-216-833-11	METAL CHIP	10K	5%	1/16W
R326	1-216-833-11	METAL CHIP	10K	5%	1/16W
R327	1-216-845-11	METAL CHIP	100K	5%	1/16W
R328	1-216-825-11	METAL CHIP	2.2K	5%	1/16W
R329	1-216-073-00	METAL CHIP	10K	5%	1/10W
R331	1-216-821-11	METAL CHIP	1K	5%	1/16W
R332	1-216-821-11	METAL CHIP	1K	5%	1/16W
R333	1-216-825-11	METAL CHIP	2.2K	5%	1/16W
R401	1-218-739-11	METAL CHIP	91K	0.50%	1/16W
R402	1-218-724-11	METAL CHIP	22K	0.50%	1/16W
R403	1-216-833-11	METAL CHIP	10K	5%	1/16W
R404	1-216-844-11	METAL CHIP	82K	5%	1/16W
R405	1-216-833-11	METAL CHIP	10K	5%	1/16W
R406	1-216-805-11	METAL CHIP	47	5%	1/16W
R407	1-216-809-11	METAL CHIP	100	5%	1/16W
R410	1-216-857-11	METAL CHIP	1M	5%	1/16W
R411	1-216-857-11	METAL CHIP	1M	5%	1/16W
R412	1-216-857-11	METAL CHIP	1M	5%	1/16W
R413	1-216-857-11	METAL CHIP	1M	5%	1/16W
R414	1-216-854-11	METAL CHIP	560K	5%	1/16W
R415	1-217-671-11	METAL CHIP	1	5%	1/10W
R416	1-217-671-11	METAL CHIP	1	5%	1/10W
R417	1-218-724-11	METAL CHIP	22K	0.50%	1/16W
R418	1-216-821-11	METAL CHIP	1K	5%	1/16W
R419	1-218-734-11	METAL CHIP	56K	0.50%	1/16W
R420	1-218-724-11	METAL CHIP	22K	0.50%	1/16W
R421	1-218-717-11	METAL CHIP	11K	0.50%	1/16W
R422	1-218-870-11	METAL CHIP	9.1K	0.50%	1/16W
R423	1-218-720-11	METAL CHIP	15K	0.50%	1/16W
R424	1-216-019-00	METAL CHIP	56	5%	1/10W
R501	1-216-845-11	METAL CHIP	100K	5%	1/16W
R502	1-216-829-11	METAL CHIP	4.7K	5%	1/16W
R503	1-216-829-11	METAL CHIP	4.7K	5%	1/16W
R504	1-216-839-11	METAL CHIP	33K	5%	1/16W
R505	1-211-992-11	METAL CHIP	91	0.50%	1/16W
R506	1-217-671-11	METAL CHIP	1	5%	1/10W
R507	1-216-845-11	METAL CHIP	100K	5%	1/16W
R508	1-218-868-11	METAL CHIP	7.5K	0.50%	1/16W
R509	1-218-736-11	METAL CHIP	68K	0.50%	1/16W
R510	1-218-870-11	METAL CHIP	9.1K	0.50%	1/16W
R511	1-218-867-11	METAL CHIP	6.8K	0.50%	1/16W
R512	1-216-846-11	METAL CHIP	120K	5%	1/16W
R513	1-216-833-11	METAL CHIP	10K	5%	1/16W
R514	1-216-833-11	METAL CHIP	10K	5%	1/16W
R515	1-216-833-11	METAL CHIP	10K	5%	1/16W
R516	1-218-714-11	METAL CHIP	8.2K	0.50%	1/16W
R517	1-218-724-11	METAL CHIP	22K	0.50%	1/16W
R518	1-218-886-11	METAL CHIP	43K	0.50%	1/16W
R519	1-216-849-11	METAL CHIP	220K	5%	1/16W
R520	1-216-844-11	METAL CHIP	82K	5%	1/16W
R521	1-216-837-11	METAL CHIP	22K	5%	1/16W
R522	1-216-833-11	METAL CHIP	10K	5%	1/16W
R523	1-216-821-11	METAL CHIP	1K	5%	1/16W
R524	1-216-833-11	METAL CHIP	10K	5%	1/16W
R525	1-216-833-11	METAL CHIP	10K	5%	1/16W
R526	1-216-857-11	METAL CHIP	1M	5%	1/16W
R527	1-216-855-11	METAL CHIP	680K	5%	1/16W
R528	1-216-841-11	METAL CHIP	47K	5%	1/16W
R529	1-216-849-11	METAL CHIP	220K	5%	1/16W
R530	1-216-825-11	METAL CHIP	2.2K	5%	1/16W
R531	1-216-825-11	METAL CHIP	2.2K	5%	1/16W
R532	1-216-837-11	METAL CHIP	22K	5%	1/16W
R534	1-216-847-11	METAL CHIP	150K	5%	1/16W
R535	1-216-833-11	METAL CHIP	10K	5%	1/16W
R536	1-216-857-11	METAL CHIP	1M	5%	1/16W
R537	1-216-833-11	METAL CHIP	10K	5%	1/16W
R538	1-216-825-11	METAL CHIP	2.2K	5%	1/16W
R539	1-216-843-11	METAL CHIP	68K	5%	1/16W
R542	1-216-834-11	METAL CHIP	12K	5%	1/16W
R543	1-216-834-11	METAL CHIP	12K	5%	1/16W
R544	1-216-823-11	METAL CHIP	1.5K	5%	1/16W
R545	1-216-847-11	METAL CHIP	150K	5%	1/16W
R546	1-216-842-11	METAL CHIP	56K	5%	1/16W
R547	1-218-705-11	METAL CHIP	3.6K	0.50%	1/16W
R548	1-216-821-11	METAL CHIP	1K	5%	1/16W
R549	1-216-845-11	METAL CHIP	100K	5%	1/16W

Ref. No.	Part No.	Description			Remark
R550	1-216-833-11	METAL CHIP	10K	5%	1/16W
R551	1-216-839-11	METAL CHIP	33K	5%	1/16W
R552	1-216-849-11	METAL CHIP	220K	5%	1/16W
R554	1-216-849-11	METAL CHIP	220K	5%	1/16W
R802	1-216-857-11	METAL CHIP	1M	5%	1/16W
R804	1-216-845-11	METAL CHIP	100K	5%	1/16W
R805	1-216-857-11	METAL CHIP	1M	5%	1/16W
R806	1-216-820-11	METAL CHIP	820	5%	1/16W
R807	1-216-822-11	METAL CHIP	1.2K	5%	1/16W
R808	1-216-823-11	METAL CHIP	1.5K	5%	1/16W
R809	1-216-825-11	METAL CHIP	2.2K	5%	1/16W
R810	1-216-827-11	METAL CHIP	3.3K	5%	1/16W
R811	1-216-829-11	METAL CHIP	4.7K	5%	1/16W
R812	1-216-857-11	METAL CHIP	1M	5%	1/16W
R813	1-216-854-11	METAL CHIP	560K	5%	1/16W
R814	1-218-716-11	METAL CHIP	10K	0.50%	1/16W
R815	1-216-861-11	METAL CHIP	2.2M	5%	1/16W
R819	1-216-838-11	METAL CHIP	27K	5%	1/16W
R820	1-216-845-11	METAL CHIP	100K	5%	1/16W
R821	1-216-857-11	METAL CHIP	1M	5%	1/16W
R822	1-216-837-11	METAL CHIP	22K	5%	1/16W
R823	1-216-837-11	METAL CHIP	22K	5%	1/16W
R824	1-216-829-11	METAL CHIP	4.7K	5%	1/16W
R825	1-216-837-11	METAL CHIP	22K	5%	1/16W
R901	1-216-821-11	METAL CHIP	1K	5%	1/16W
R902	1-216-835-11	METAL CHIP	15K	5%	1/16W
R903	1-216-845-11	METAL CHIP	100K	5%	1/16W
R904	1-216-817-11	METAL CHIP	470	5%	1/16W
R905	1-216-009-00	METAL CHIP	22	5%	1/10W
R906	1-216-811-11	METAL CHIP	150	5%	1/16W
R907	1-216-813-11	METAL CHIP	220	5%	1/16W
R908	1-216-811-11	METAL CHIP	150	5%	1/16W
R909	1-216-813-11	METAL CHIP	220	5%	1/16W
R910	1-216-829-11	METAL CHIP	4.7K	5%	1/16W
R911	1-216-829-11	METAL CHIP	4.7K	5%	1/16W
R912	1-216-811-11	METAL CHIP	150	5%	1/16W
R913	1-216-813-11	METAL CHIP	220	5%	1/16W
R914	1-216-811-11	METAL CHIP	150	5%	1/16W
R915	1-216-813-11	METAL CHIP	220	5%	1/16W
R916	1-216-829-11	METAL CHIP	4.7K	5%	1/16W
R917	1-216-841-11	METAL CHIP	47K	5%	1/16W
R918	1-216-829-11	METAL CHIP	4.7K	5%	1/16W
R919	1-216-829-11	METAL CHIP	4.7K	5%	1/16W
R920	1-216-809-11	METAL CHIP	100	5%	1/16W
R921	1-216-811-11	METAL CHIP	150	5%	1/16W
R922	1-216-809-11	METAL CHIP	100	5%	1/16W
R923	1-216-811-11	METAL CHIP	150	5%	1/16W
R924	1-216-811-11	METAL CHIP	150	5%	1/16W
R925	1-216-813-11	METAL CHIP	220	5%	1/16W
R926	1-216-811-11	METAL CHIP	150	5%	1/16W
R927	1-216-813-11	METAL CHIP	220	5%	1/16W
R928	1-216-811-11	METAL CHIP	150	5%	1/16W
R929	1-216-813-11	METAL CHIP	220	5%	1/16W
R930	1-216-811-11	METAL CHIP	150	5%	1/16W
R931	1-216-813-11	METAL CHIP	220	5%	1/16W
R932	1-216-811-11	METAL CHIP	150	5%	1/16W
R933	1-216-813-11	METAL CHIP	220	5%	1/16W
R934	1-216-811-11	METAL CHIP	150	5%	1/16W
R935	1-216-813-11	METAL CHIP	220	5%	1/16W
R936	1-216-811-11	METAL CHIP	150	5%	1/16W
R937	1-216-813-11	METAL CHIP	220	5%	1/16W
R938	1-216-811-11	METAL CHIP	150	5%	1/16W
R939	1-216-813-11	METAL CHIP	220	5%	1/16W
R940	1-216-811-11	METAL CHIP	150	5%	1/16W
R941	1-216-813-11	METAL CHIP	220	5%	1/16W
R942	1-216-811-11	METAL CHIP	150	5%	1/16W
R943	1-216-813-11	METAL CHIP	220	5%	1/16W
R944	1-216-829-11	METAL CHIP	4.7K	5%	1/16W
R945	1-216-841-11	METAL CHIP	47K	5%	1/16W

< VARIABLE RESISTOR >

RV301	1-223-382-11	RES, VAR, CARBON 10K/10K (VOLUME ◢)
RV501	1-223-612-11	RES, ADJ, METAL GLAZE 47K
RV502	1-223-695-11	RES, ADJ, METAL GLAZE 10K
RV503	1-223-578-11	RES, ADJ, METAL GLAZE 22K
RV504	1-223-578-11	RES, ADJ, METAL GLAZE 22K
RV505	1-223-612-11	RES, ADJ, METAL GLAZE 47K

< SWITCH >

S302	1-571-506-41	SWITCH, SLIDE (AVLS)
S801	1-572-272-11	SWITCH, SLIDE (HOLD)
S802	1-692-459-11	SWITCH (▶II)
S803	1-692-459-11	SWITCH (■ STOP/DISPLY OFF)
S804	1-692-459-11	SWITCH (▶▶I)
S805	1-692-459-11	SWITCH (I◀◀)
S806	1-692-459-11	SWITCH (REPEAT/ENTER)
S807	1-692-459-11	SWITCH (PLAY MODE)
S808	1-692-459-11	SWITCH (DSP)
S809	1-572-126-21	SWITCH, PUSH (1 KEY) (BATT SW)
S810	1-570-953-11	SWITCH, PUSH (1 KEY) (OPEN)
S811	1-572-908-11	SWITCH, SLIDE (RESUME)
S813	1-692-459-11	SWITCH (SURROUND)
S814	1-572-272-11	SWITCH, SLIDE (ILLUMINATION)

< TRANSFORMER >

T401	1-423-636-11	TRANSFORMER, DC-DC CONVERTER

MAIN

Ref. No.	Part No.	Description	Remark
		< VIBRATOR >	
X301	1-579-345-11	VIBRATOR, CERAMIC (16.94MHz)	
X801	1-579-063-21	VIBRATOR, CERAMIC (4.19MHz)	

****

MISCELLANEOUS
****

⚠102	8-848-289-31	DEVICE, OPTICAL KSS-331A	
106	1-948-418-21	HARNESS	
M901	X-2625-485-1	MOTOR ASSY, T.T.	
M902	X-2625-171-2	MOTOR ASSY, SLED	
S910	1-570-771-11	SWITCH (LIMIT SW)	

****

ACCESSORIES & PACKING MATERIALS
****

⚠	1-467-009-11	ADAPTOR, AC (AC-E455)	
	1-532-360-XX	FUSE (125V 1A) (for DCC-E455)	
*	1-751-087-11	CORD, CAR BATTERY (DCC-E455)	
	1-751-419-11	CORD, CONNECTION	
*	2-120-526-01	TUBE, SPIRAL	
	3-759-119-21	MANUAL, INSTRUCTION (ENGLISH)	
	3-759-119-31	MANUAL, INSTRUCTION (FRENCH) (Canadian)	
*	4-916-258-01	TAPE, MAGIC	
	4-950-259-01	CAP (for DCC-455)	
	4-950-263-01	SPRING (for DCC-455)	
	4-950-277-01	CHIP (for DCC-455)	
*	4-967-787-01	CUSHION	
*	4-967-791-01	INDIVIDUAL CARTON	
	A-3263-915-A	CPA-6	

****

****
HARDWARE LIST
****

#1	7-627-852-17	+P 1.7X4
#3	7-627-852-18	SCREW, PRECISION +P 1.7X4 TYPE3
#4	7-685-104-19	SCREW (2X6), TAPPING (B)
#5	7-685-105-19	SCREW (2X8), TAPPING (B)

The components identified by mark ⚠ or dotted line with mark. ⚠ are critical for safety. Replace only with part number specified.	Les composants identifiés par une marque ⚠ sont critiques pour la sécurité. Ne les remplacer que par une pièce portant le numéro spécifié.

English
94J050437-1
Printed in Japan

9-959-646-12

Sony Corporation
Consumer A&V Products Company
Personal A&V Products Div.

Published by Home A&V Products Div.
Quality Engineering Dept.

D-824K

SONY®
SERVICE MANUAL

US Model
Canadian Model

SUPPLEMENT-1

File this supplement with the service manual.

Subject: 1. Electrical Adjustments
• Focus/Tracking Gain Adjustment

1. ELECTRICAL ADJUSTMENTS

Focus/Tracking Gain Adjustment

A servo analayzer is necessary in order to perform this adjustment exactly.

> However, this gain has a margin, so even if it is slightly off, there is no probrem. Therefore, do not perform this adjustment.

Focus/tracking gain determines the pick-up follow-up relative to mechanical noise and mechanical shock when the 2-axis device operates. However, as these reciprocate, the adjustment is at the point where both are satisfied.

- When gain is rased, the noise when 2-axis device operates increase.
- When gain is lowered, it is more susceptible to mechanical shock and skipping occurs more easily.

This adjustment has to be performed upon replacing any of the following parts.

- Optical pick-up
- RV503 (Focus gain VR)
- RV504 (Tracking gain VR)

> Normally, be sure not to move RV503 (focus gain VR) and RV504 (tracking gain VR).

Adjustment method:

– Focus Gain Adjustment –

This adjustment is not performed.
If focus gain VR RV503 is turned, set to mechanical center.

– Tracking Gain Adjustment –
(perform at normal operation)

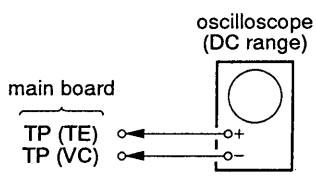

1. Place the optical pick-up level, horizontally. (If the optical pick-up is not level, the 2-axis device will be weighted and adjustment cannot be done.)
2. Connect the osilloscope to TP (TE) and TP (VC) on main board.
3. Set the disc (YEDS-18) and press the ▶II key.
4. Turn RV504 slightly counterclockwise (tracking gain drops) and obtain a waveform with a fundamental wave (waveform has large waves) as in Figure 1.
5. Turn RV504 slowly counterclockwise (tracking gain rises) until the fundemental wave disappears (no large waves) as in Figure 2.
6. Set RV504 to the position about 30 ° clockwise form the position obtained in step 5. If RV504 contact point is more than 90 ° clockwise from mechanical center, tracking gain is too high. In this case, readjust from step 4.
7. Press ▶▶I or I◀◀ key and observe the 100 track jump waveform. Check that no traverse waveform appears for both ▶▶I and I◀◀ directions. (See Figures 3 and 4.) It is acceptable if the traverse waveform appears only now and then, but if it appears constantly, raise tracking gain slightly and check step 7 again.
8. Check that there is not abnormal amount of operation noise (white noise) from the 2-axis device. If there is, tracking gain is too high, readjust starting with step 4.

English
95F0523-1
Printed in Japan

Sony Corporation
Consumer A&V Products Company
Personal A&V Products Div.

9-959-646-81

Published by Home A&V Products Div.
Quality Engineering Dept.

The waveforms are those measured with the oscilloscope set as shown below.

- VOLT/DIV: 0.2 V
- TIME/DIV: 5 ms

- Waveform when tracking gain is lowered.
  Fundamental wave appears (large waves).

Fig. 1

- Waveform when fundamental wave disappears (no large waves).

Fig. 2

- Waveform with no traverse waveform during 100 track jump. (Brake application is smooth because of adjustment.)

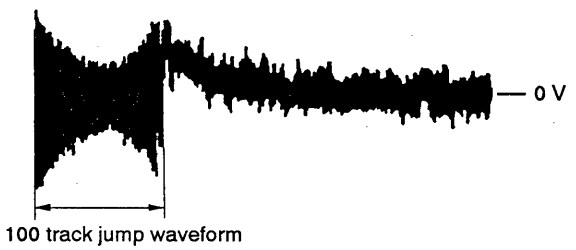

Fig. 3

- Waveform with traverse waveform during 100 track jump.
  (Brake application is poor because of adjustment.)

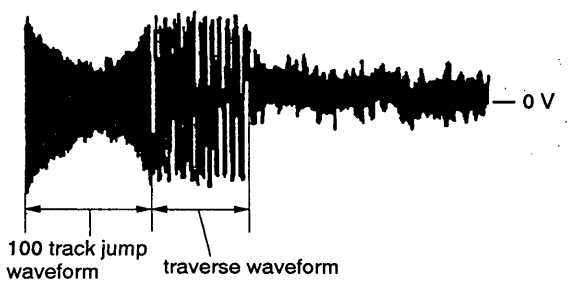

Fig. 4

Connection and Adjustment Location

– MAIN BOARD – (Side A)