D-844K/848K

SERVICE MANUAL

US Model
D-844K/848K
Canadian Model
Tourist Model
D-848K
AEP Model
UK Model
E Model
D-844K

Model Name Using Similar Mechanism	NEW
CD Mechanism Type	KSM-333CAN
Optical Pick-Up Name	KSS-333C

SPECIFICATIONS

System
Compact disc digital audio system

Laser diode properties
Material: GaAlAs
Wavelength: λ =780 nm
Emission duration: Continuous
Laser output power: Less than 44.6 μW*
*This output is the value measured at a distance of 200 mm from the objective lens surface on the optical pick-up block with 7 mm aperture.

Error correction
Sony Super Strategy Cross Interleave Reed Solomon Code

D-A conversion
1-bit quartz time-axis control

Frequency response
20-20,000 Hz $\pm\frac{1}{2}$ dB (measured by EIAJ CP-307)

Output (at 4.5 V input level)
Headphones (stereo minijack)
20 mW + 20 mW at 16 ohms
Line output (stereo minijack)
Output level 0.75 V rms at 47 kilohms
Recommended load impedance over 10 kilohms

General

Power requirements
- Sony BP-DM10 rechargeable battery: 2.4 V DC, Ni-Cd, 650 mAh
- Two LR6 (size AA) batteries: 3 V DC
- AC power adaptor (DC IN 4.5 V jack):
  220-230 V, 50 Hz (European and Asian model)
  120 V, 60 Hz (USA, Canadian, Central and South American model)
  100-240 V, 50/60 Hz (Middle Eastern model)
  240 V, 50 Hz (U.K. model)
  100-240 V, 50/60 Hz (Model for other countries)
- Car battery (DC IN 4.5 V jack): 4.5 V DC

Dimensions (w/h/d) (incl. projecting parts and controls)
Approx. 140 × 33.3 × 166.5 mm ($5\frac{5}{8} \times 1\frac{5}{16} \times 6\frac{5}{8}$ in.)

Mass (excl. rechargeable batteries)
Approx. 313 g (11 oz)

Operating temperature
5 ℃-35 ℃ (45 °F-95 °F)

Supplied accessories
AC power adaptor (1)
Car battery cord (1)
Car connecting pack (1)
Velcro tapes (2)
Spiral tube (1)
Spare fuse (1)
Connecting cord (Phono plug. × 2 ↔ stereo miniplug) (1)*
Wireless remote control (1)
Stereo headphones (1)**
*Not supplied with USA model
**Supplied for the European Continent

Design and specifications are subject to change without notice.

COMPACT DISC COMPACT PLAYER

SONY®

TABLE OF CONTENTS

Flexible Circuit Board Repairing

- Keep the temperature of the soldering iron around 270 ℃ during repairing.
- Do not touch the soldering iron on the same conductor of the circuit board (within 3 times).
- Be careful not to apply force on the conductor when soldering or unsoldering.

Notes on chip component replacement

- Never reuse a disconnected chip component.
- Notice that the minus side of a tantalum capacitor may be damaged by heat.

SAFETY-RELATED COMPONENT WARNING!!

COMPONENTS IDENTIFIED BY MARK ⚠ OR DOTTED LINE WITH MARK ⚠ ON THE SCHEMATIC DIAGRAMS AND IN THE PARTS LIST ARE CRITICAL TO SAFE OPERATION. REPLACE THESE COMPONENTS WITH SONY PARTS WHOSE PART NUMBERS APPEAR AS SHOWN IN THIS MANUAL OR IN SUPPLEMENTS PUBLISHED BY SONY.

ATTENTION AU COMPOSANT AYANT RAPPORT À LA SÉCURITÉ!

LES COMPOSANTS IDENTIFIÉS PAR UNE MARQUE ⚠ SUR LES DIAGRAMMES SCHÉMATIQUES ET LA LISTE DES PIÈCES SONT CRITIQUES POUR LA SÉCURITÉ DE FONCTIONNEMENT. NE REMPLACER CES COMPOSANTS QUE PAR DES PIÈCES SONY DONT LES NUMÉROS SONT DONNÉS DANS CE MANUEL OU DANS LES SUPPLÉMENTS PUBLIÉS PAR SONY.

This Compact Disc player is classified as a CLASS 1 LASER product.
The CLASS 1 LASER PRODUCT label is located on the bottom exterior.

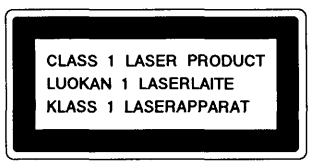

CAUTION

Use of controls or adjustments or performance of procedures other than those specified herein may result in hazardous radiation exposure.

Parts identification

For explanation of the use of each part, refer to the pages indicated in parentheses.

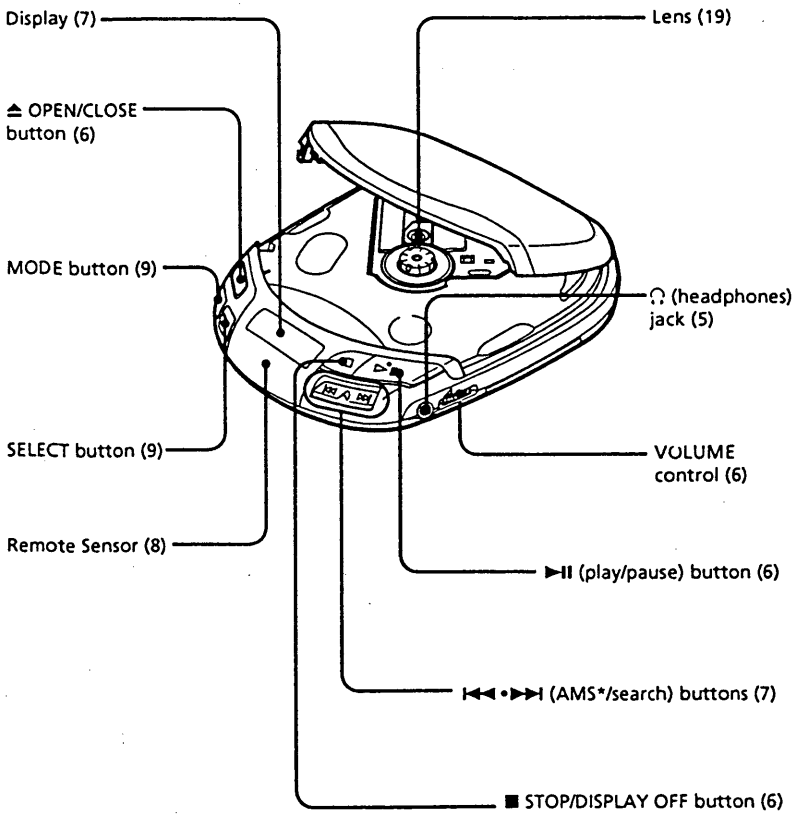

* AMS: Automatic Music Sensor

Continue to the next page →

Parts identification (continued)

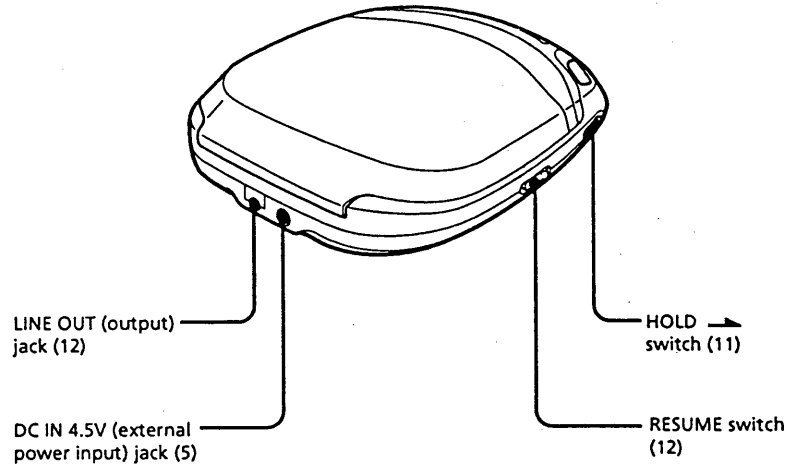

SECTION 1
GENERAL

This section is extracted from instruction manual.

SECTION 2
SERVICE NOTE

NOTES ON HANDLING THE OPTICAL PICK-UP BLOCK OR BASE UNIT

The laser diode in the optical pick-up block may suffer electrostatic breakdown because of the potential difference generated by the charged electrostatic load, etc. on clothing and the human body.
During repair, pay attention to electrostatic breakdown and also use the procedure in the printed matter which is included in the repair parts.
The flexible board is easily damaged and should be handled with care.

NOTES ON LASER DIODE EMISSION CHECK

The laser beam on this model is concentrated so as to be focused on the disc reflective surface by the objective lens in the optical pick-up block. Therefore, when checking the laser diode emission, observe from more than 30 cm away from the objective lens.

Before Replacing the Optical Pick-Up Block

Please be sure to check thoroughly the parameters as par the "Optical Pick-Up Block Checking Procedures" (Part No.: 9-960-027-11) issued separately before replacing the optical pick-up block.
Note and specifications required to check are given below.

- FOK output: IC801 ⑭ pin
  When checking FOK, remove the lead wire to disc motor.
- S curve P-to-P value: 2.5 Vp-p IC501 ⑬ pin
  When checking S curve P-to-P value, remove the lead wire to disc motor.
- Adjusted part for focus gain adjustment: RV504
- RF signal P-to-P value: 0.8 – 1.2 Vp-p
- Traverse signal P-to-P value: 1.0 – 2.0 Vp-p
- The repairing grating holder is impossible.
- Adjusted part for tracking gain adjustment: RV503

Precautions for Checking Emission of Laser Diode

Laser light of the equipment is focused by the object lens in the optical pick-up so that the light focuses on the reflection surface of the disc. Therefore, be sure to keep your eyes more then 30 cm apart from the object lens when you check the emission of laser diode.

Laser Diode Checking Methods

During normal operation of the equipment, emission of the laser diode is prohibited unless the upper panel is closed while turning ON the S810 (push switch type).
The following two checking methods for the laser diode are operable.

- **Method-1 (In the service mode or normal operation): Emission of the laser diode is visually checked.**

1. Open the upper panel.
2. Push the S810 as shown in Fig. 1.
3. Check the object lens for confirming normal emission of the laser diode. If not emitting, there is a trouble in the automatic power control circuit or the optical pick-up.
   During normal operation, the laser diode is turned ON about 2.5 seconds for focus searching.

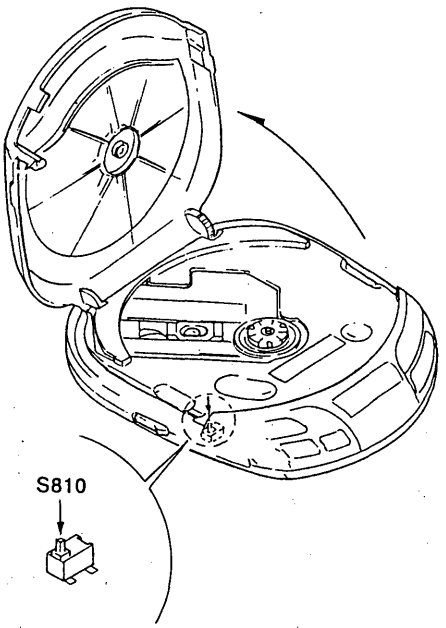

Fig. 1 Method to push the S810

- **Method-2 (In service mode or normal operation): Check the value of current flowing in the laser diode.**

1. Remove the upper panel.
2. Read the current printed on the label attached on the rear side of the optical pick-up.

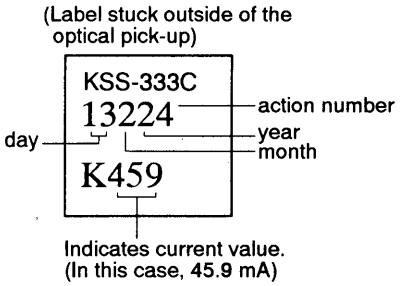

3. Connect a digital voltmeter as shown in Fig. 2.
4. Press the ▶II key.
5. Calculate current value by the reading of the digital voltmeter.
   Reading of the digital voltmeter (V) ÷ 4.7=current value (A)
   (Example) Reading of the digital voltmeter of 0.216 V:
   0.216 V ÷ 4.7 Ω =0.0459 (A) = 45.9 mA
6. Check that the current value is within the following range.
   - Current value of the label $^{+5}_{-11}$ mA (25 ℃)
     Variation by temperature: 0.4 mA/℃
     Current increases with temperature increased.
     Current decreases with temperature decreased.

   If the current is more than the range above, there is a trouble in the automatic power control circuit or the laser diode is in deterioration.
   If less than the range, a trouble exists in the automatic power control circuit or the optical pick-up.

– MAIN BOARD – (Conductor Side)

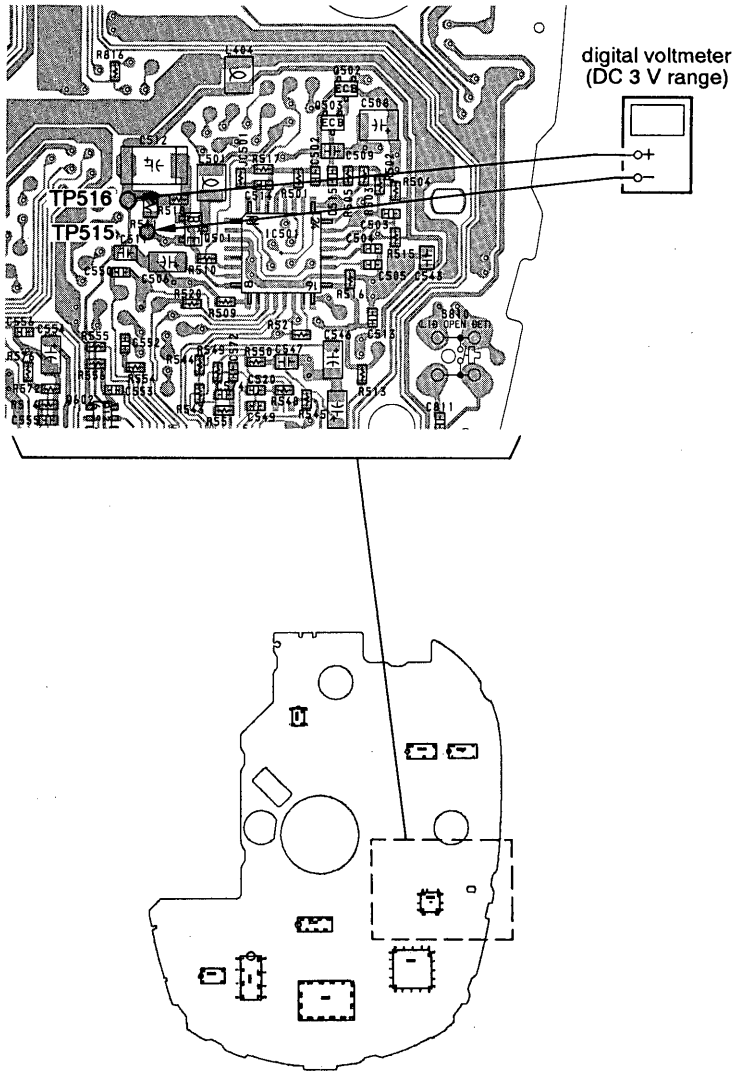

Fig. 2 Digital voltmeter connecting location

SECTION 3
DISASSEMBLY

Note: Follow the disassembly procedure in the numerical order given.

CABINET (LOWER)

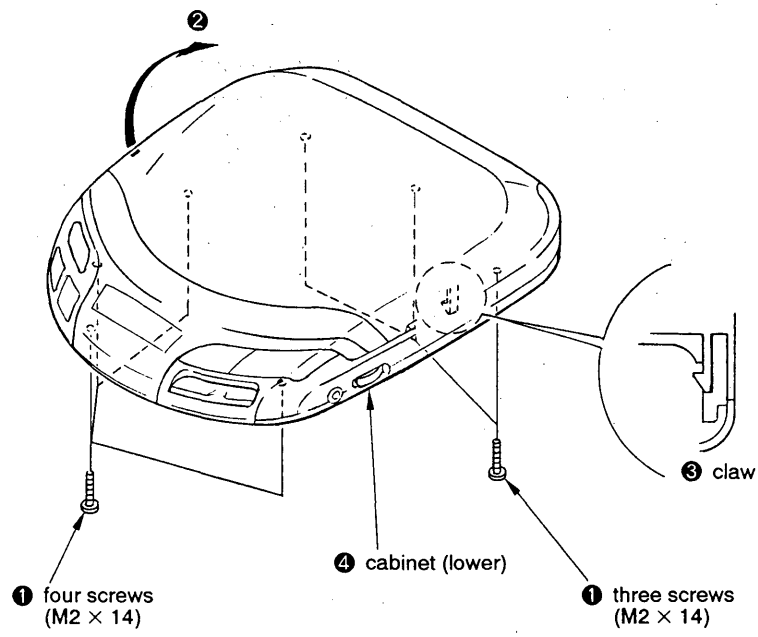

INSTALLATION MAIN BOARD

On installation MAIN board, align the S808, 809 with knob HOLD, RESUME.

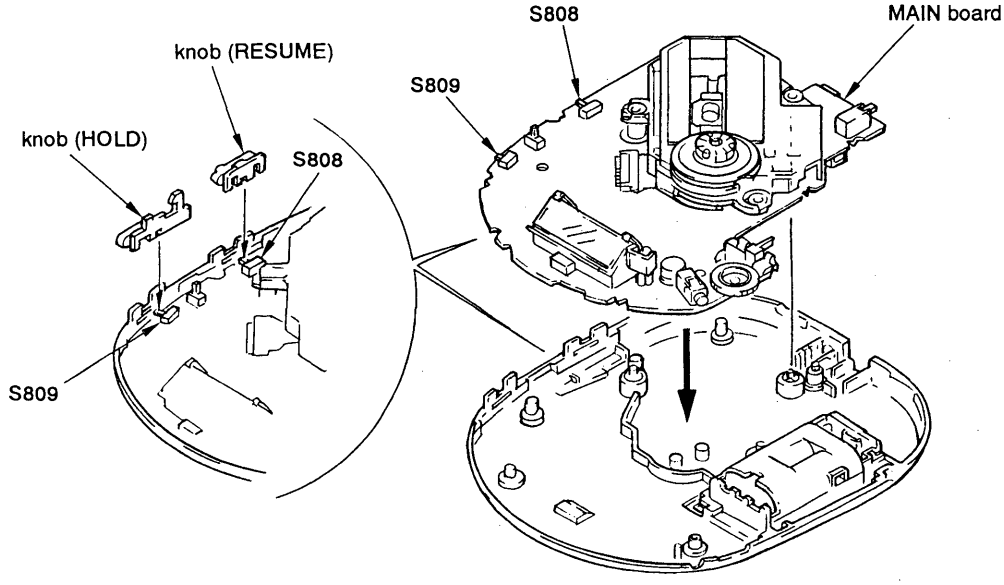

SECTION 4
SERVICE MODE

Service Mode (Service program)

The equipment is provided with a service program built in the microcomputer, like conventional models.
Service program operation methods are described in the following.

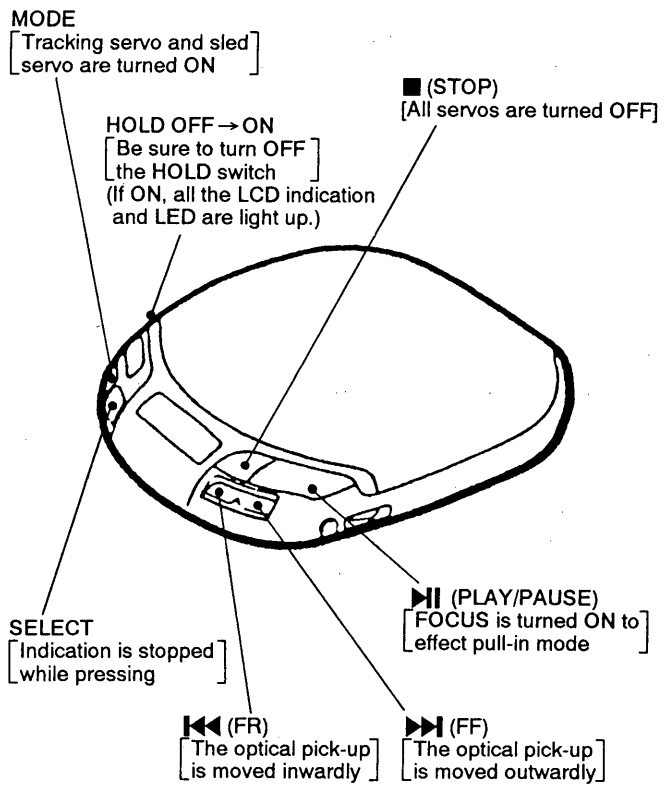

Descriptions in [ ] indicate major operations in the service mode. For more information, see Step 2.

Fig. 3 Layout of each key

• Step 1 (Service mode setting methods)

1. Turn OFF the HOLD switch with external power supply disconnected (power is not applied to the set).
2. Solder across the TEST terminals (pin ⑲, IC801 (TEST) is grounded).
3. Connect an external power supply.

   Thus, the set is switched to the service mode.

• Step 2 (Operation in the service mode)

1. Once the service mode is effected, the LCD displays 5 indications each of which is repeatedly displayed.
   However, the following operations can be activated even if LCD indication is effected.
2. By pressing the |◀◀ or ▶▶| key, the optical pick-up is movable inwardly or outwardly. However, if this is activated, tracking servo and sled servo are turned OFF, so it can be turned ON by pressing the MODE key if required.
3. By pressing the SELECT key, the display stops.
   With the key released, repeated indication is continued, so you can check each segment.
4. By pressing the ▶II key, focus is turned ON from focus searching while entering CLV-S (pull-in mode).
   Without disc, focus searching is repeated continuously.
5. By pressing the MODE key, tracking servo, sled servo and CLV-A (servo in PLAY) are turned ON.
6. When 4. and 5. are performed, playing begins. No muting is ON in the service mode.
7. By pressing the ■ key, all servos (focus, tracking and sled) are turned OFF. However, the disc motor revolves for a while by inertia.

• Step 3 (Resetting of service mode)

1. Be sure to disconnect the external power supply and remove the solder bridge at the TEST terminal connected before in setting.
2. The set thus becomes available for normal operation.

– MAIN BOARD – (Component Side)

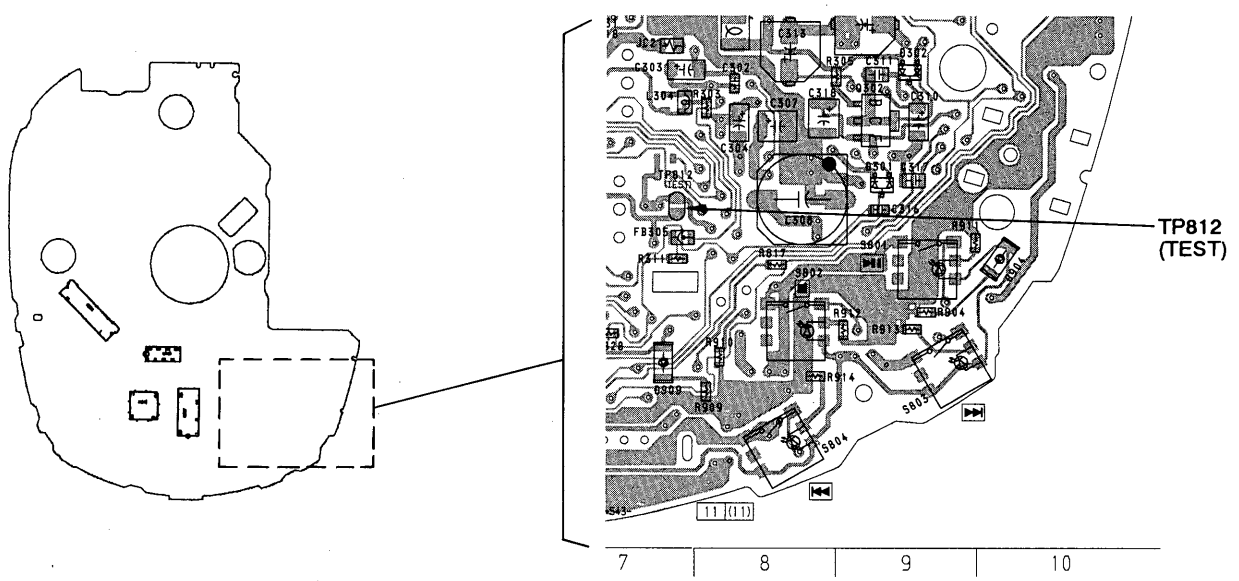

Fig. 4 Location of TEST terminal

SECTION 5
ELECTRICAL ADJUSTMENTS

Precautions for Adjustment

1. Before beginning adjustment, set the equipment to service mode.
   After the completion of adjustment, be sure to reset the service mode.
   For more information, see "Service Mode (service program)" on page 7.
2. Perform adjustments in the order given.
3. Use YEDS-18 disc (Part No.: 3-702-101-01) unless otherwise indicated.
4. Power supply voltage requirement: DC4.5 V
   HOLD switch : OFF
   VOLUME control : Minimum

Before Beginning Adjustment

Set the equipment to service mode (See page 7) and check the following. If there is an error, repair the equipment.

• Checking of the sled motor

1. Open the upper panel.
2. Press the ▶▶| and |◀◀ keys and check that the optical pick-up can move smoothly without sluggishness or abnormal noise in innermost periphery → outermost periphery → innermost periphery.
   ▶▶| : The optical pick-up moves outwardly.
   |◀◀ : The optical pick-up moves inwardly.

• Checking of focus searching

1. Open the upper panel.
2. Press the ▶|| key. (Focus searching operation is activated continuously.)
3. Check the object lens of the optical pick-up for smooth up/down motion without sluggishness or abnormal noise.
4. Press the ■ key.
   Check that focus searching operation is deactivated. If not, again press the ■ key slightly longer.

VDD Adjustment

Adjustment Procedure:

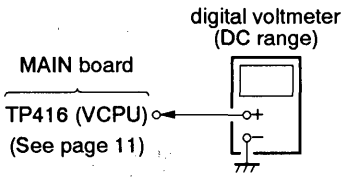

1. Set the equipment to service mode stop state. (See page 7.)
2. Connect the digital voltmeter to TP416 (VCPU) of the MAIN board.
3. Adjust RV401 on the MAIN board so that the reading on digital voltmeter goes 3.0 ± 0.05 V.
4. After the completion of adjustment, reset service mode. (See page 7.)

Adjustment Location: MAIN board

Tracking Balance Adjustment

Condition:

- Hold the set in horizontal state.

Adjustment Procedure:

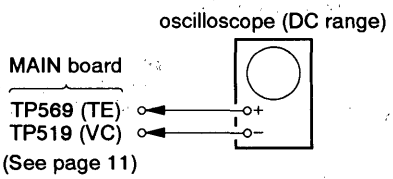

1. Connect the oscilloscope to TP569 (TE) of the MAIN board.
2. Set the equipment to service mode stop state. (See page 7.)
3. Move the optical pick-up by pressing the ▶▶| and |◀◀ keys.
4. Put the disc (YEDS-18).
5. Press the ▶|| key.
   [From focus searching, focus is turned ON while entering CLV drawing-in mode. Tracking and sled are turned OFF.]
6. Adjust RV501 so that the waveform on the oscilloscope becomes up/down symmetrical with an axis of 0 V.

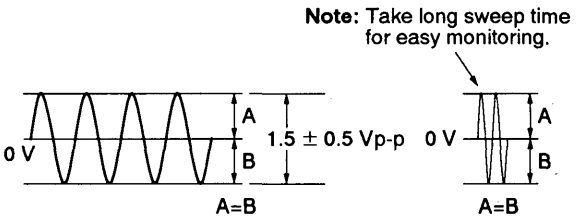

7. Stop removing of the disc motor by pressing the ■ key.
8. After the completion of adjustment, reset service mode. (See page 7.)

Adjustment Location: MAIN board

Focus Bias Check

Condition:

- Hold the set in horizontal state.

Adjustment Procedure:

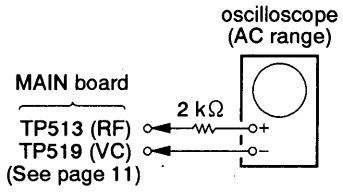

1. Set the equipment to service mode stop state. (See page 7.)
2. Connect the oscilloscope to the test point TP513 (RF) of the MAIN board.
3. Move the optical pick-up by pressing the ▶▶| and |◀◀ keys.
4. Put the disc (YEDS-18).
5. Put the ▶|| key.
   [From focus searching, focus is turned ON while entering CLV drawing-in mode. Tracking and sled are turned OFF.]
6. Press the MODE key. (Both tracking and sled are turned ON.)
7. Check the oscilloscope waveform is as shown below.
   A good eye pattern means that the diamond shape (◇) in the center of the waveform can be clearly distinguished.

RF SIGNAL REFERENCE WAVEFORM (EYE PATTERN)

VOLT DIV : 200 mV (With the 10:1 probe in use)
TIME DIV : 500 ns

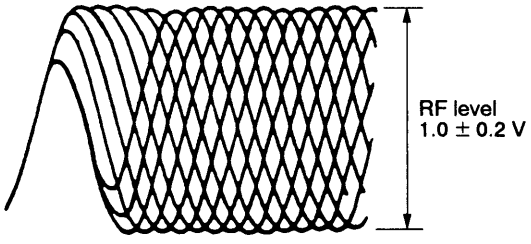

To watch the eye pattern, set the oscilloscope to AC range and increase the vertical sensitivity of the oscilloscope for easy watching.

8. Stop revolving of the disc motor by pressing the ■ key.
9. After the completion of adjustment, reset service mode. (See page 7.)

Adjustment Location: MAIN Board

Focus/Tracking Gain Adjustment

A servo analyzer is necessary in order to perform this adjustment exactly.

> However, this gain has a margin, so even if it is slightly off, there is no probrem. Therefore, do not perform this adjustment.

Focus/tracking gain determines the pick-up follow-up relative to mechanical noise and mechanical shock when the 2-axis device operates. However, as these reciprocate, the adjustment is at the point where both are satisfied.

- When gain is rased, the noise when 2-axis device operates increase.
- When gain is lowered, it is more susceptible to mechanical shock and skipping occurs more easily.

This adjustment has to be performed upon replacing any of the following parts.

- Optical pick-up
- RV504 (Focus gain VR)
- RV503 (Tracking gain VR)

> Normally, be sure not to move RV504 (focus gain VR) and RV503 (tracking gain VR).

Adjustment method:

– Focus Gain Adjustment –

This adjustment is not performed.
If focus gain VR RV504 is turned, set to mechanical center.

– Tracking Gain Adjustment –

(perform at normal operation)

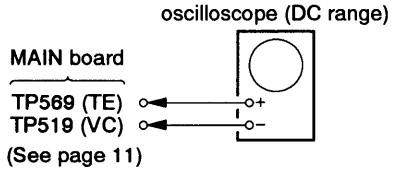

1. Place the optical pick-up level, horizontally. (If the optical pick-up is not level, the 2-axis device will be weighted and adjustment cannot be done.)
2. Connect the osilloscope to TP569 (TE) and TP519 (VC) on MAIN board.
3. Set the disc (YEDS-18) and press the ▶ (▶▶|) key.
4. Turn RV503 slightly clockwise (tracking gain drops) and obtain a waveform with a fundamental wave (waveform has large waves) as in Figure 1.
5. Turn RV503 slowly counterclockwise (tracking gain rises) until the fundemental wave disappears (no large waves) as in Figure 2.
6. Set RV503 to the position about 30 ° counterclockwise form the position obtained in step 5. If RV503 contact point is more than 90 ° counterclockwise from mechanical center, tracking gain is too high. In this case, readjust from step 4.
7. Press ▶ (▶▶|) or |◀◀ key and observe the 100 track jump waveform. Check that no traverse waveform appears for both ▶ (▶▶|) or |◀◀ directions. (See Figures 3 and 4.) It is acceptable if the traverse waveform appears only now and then, but if it appears constantly, raise tracking gain slightly and check step 7 again.
8. Check that there is not abnormal amount of operation noise (white noise) from the 2-axis device. If there is, tracking gain is too high, readjust starting with step 4.

The waveforms are those measured with the oscilloscope set as shown below.

- VOLT/DIV: 50 mV
- TIME/DIV: 5 ms

- Waveform when tracking gain is lowered.
  Fundamental wave appears (large waves).

Fig. 1

- Waveform when fundamental wave disappears (no large waves).

Fig. 2

- Waveform with no traverse waveform during 100 track jump. (Brake application is smooth because of adjustment.)

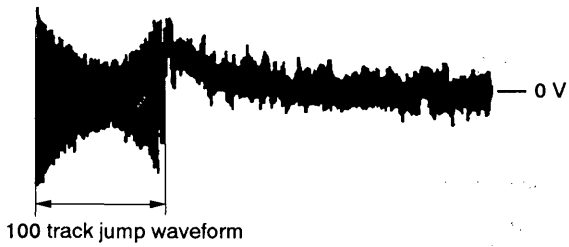

Fig. 3

- Waveform with traverse waveform during 100 track jump.
  (Brake application is poor because of adjustment.)

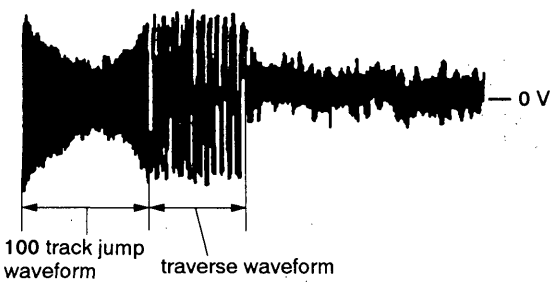

Fig. 4

Adjustment Parts Location:

– MAIN BOARD – (Component Side)

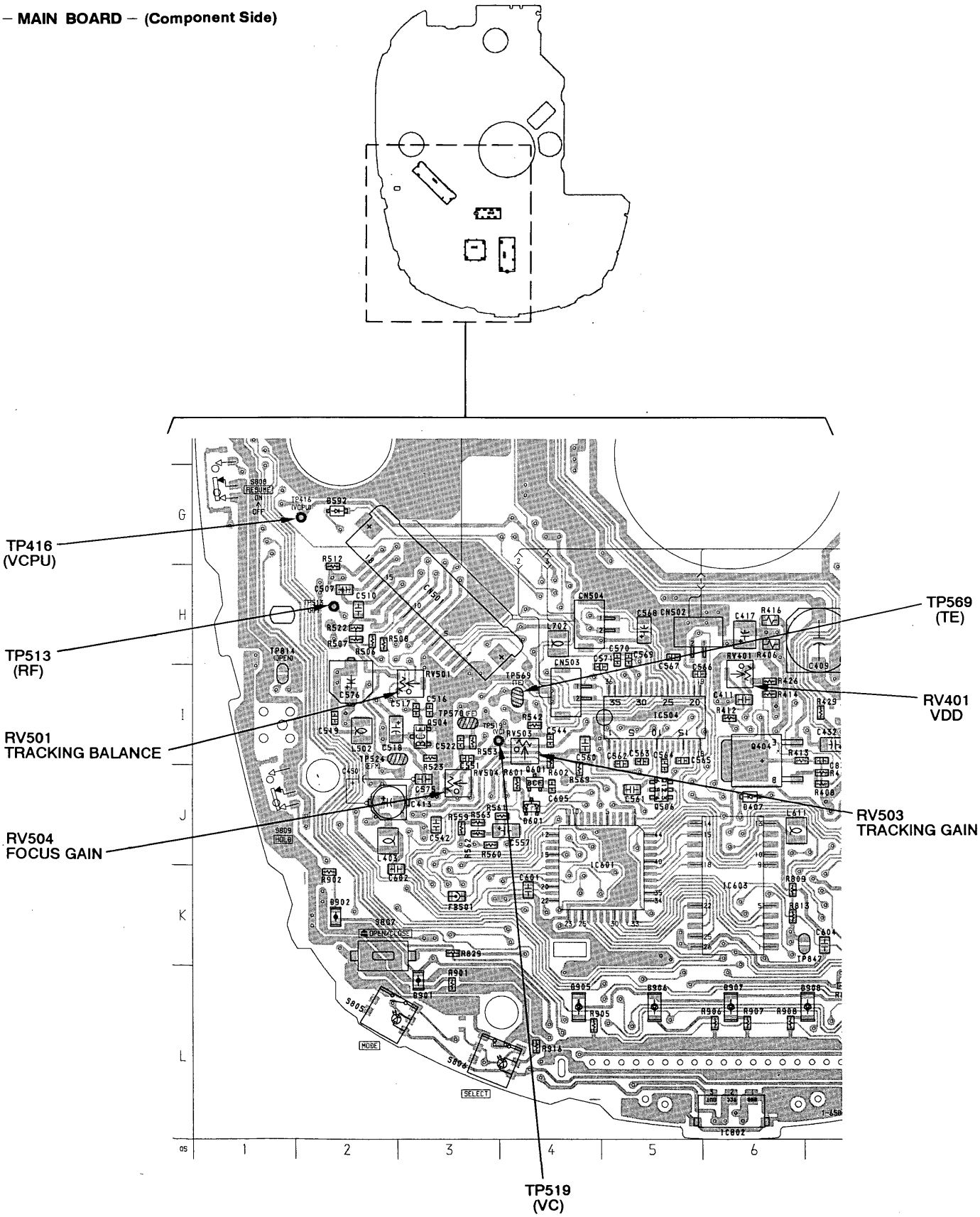

SECTION 6
DIAGRAMS

6-1. IC PIN FUNCTION DESCRIPTION
MAIN BOARD IC801 CXP83416-021Q/022Q (SYSTEM CONTROL)

Pin No.	Pin Name	I/O	Function
1	$\overline{\text{HI-CURR}}$	I	Overcurrent detection terminal (short detection)
2	RMC	I	Infrared remote control signal
3	REM	O	Serial data output for remote controller
4	BEEP	O	Beep Sound Pulse output terminal
5		—	Not used
6	PCON	O	Power control output terminal "L": Power ON, "H": Power OFF
7	SQCK	O	Clock output signal to enter SUB-Q signal from IC502 (BU9312AKS)
8	SUBQ	I	SUB-Q signal input terminal (from IC502 BU9312AKS)
9	DATA	O	Serial Data output terminal
10	YMCLK	O	Clock signal output terminal to read serial data
11	ZSENSE	I	IC601 (SM5856A1F) internal status serial input terminal
12	YMDATA	O	Serial data output terminal
13	XBUSY	I	BUSY signal input terminal "L": Track jumping, "H": Sarvo loop ON
14	FOK	I	FOK signal input terminal "H": OK, "L": NG
15	XRCHG	I	Rechargeable battery detection terminal "L": Rechargaeble battery present, "H": No rechargeable battery
16	XRST	O	Reset signal output terminal
17	XHOLD	I	Hold switch input terminal "L": HOLD ON, "H": HOLD OFF
18	XRSM	I	RESUME switch input terminal "L": RESUME ON, "H": RESUME OFF
19	XTEST	I	TEST mode at "L", when the system is reset
20	XLIMIT	I	Input terminal of MD inside track sensor (S901) "L": Inside track
21	SP. CONT	O	Lid open/close speed adjustment signal output
22	ESP	I	ESP SWITCH (Q502, 503) control terminal "L": ESP SWITCH OFF, "H": ESP SWITCH ON
23	BATMNT	I	Rechargeable battery/dry cell detection terminal
24	CHGON	I	Charging on input terminal
25	O/C. KEY	I	OPEN/CLOSE switch input terminal
26	KEY	I	A/D input of PLAY/PAUSE, STOP, FF, FR, MODE and SELECT switches
27	CLOSE	I	LID "L": OPEN, "H": CLOSE
28	CHGMNT	I	A/D input terminal for charging voltage monitor
29	DCINMNT	I	A/D input terminal for DC IN voltage detection Also used for DC IN detection
30	RESET	I	System reset input terminal System is reset at "L"
31	OSC1	I	X801 (4.19MHz) Clock oscillator input terminal
32	OSC2	O	X801 (4.19MHz) Clock oscillator output terminal
33	VSS	—	Ground terminal
34	VL	—	LCD bias resistor current control terminal (Cut off at standby)
35	VLC3	—	LCD801 bias power supply terminal
36	VLC2	—	LCD801 bias power supply terminal
37	VLC1	—	LCD801 bias power supply terminal
38	COM0	O	LCD801 common signal output terminal
39	COM1	O	LCD801 common signal output terminal
40	COM2	O	LCD801 common signal output terminal

Pin No.	Pin Name	I/O	Function
41	COM3	O	LCD801 common signal output terminal
42	SEG0	O	LCD801 segment signal output terminal
43	SEG1	O	LCD801 segment signal output terminal
44	SEG2	O	LCD801 segment signal output terminal
45	SEG3	O	LCD801 segment signal output terminal
46	SEG4	O	LCD801 segment signal output terminal
47	SEG5	O	LCD801 segment signal output terminal
48	SEG6	O	LCD801 segment signal output terminal
49	SEG7	O	LCD801 segment signal output terminal
50	SEG8	O	LCD801 segment signal output terminal
51	SEG9	O	LCD801 segment signal output terminal
52	SEG10	O	LCD801 segment signal output terminal
53	SEG11	O	LCD801 segment signal output terminal
54	SEG12	O	LCD801 segment signal output terminal
55	SEG13	O	LCD801 segment signal output terminal
56	SEG14	O	LCD801 segment signal output terminal
57	SEG15	O	LCD801 segment signal output terminal
58	LIGHT	O	Light ON/OFF "H": ON, "L": OFF
59		—	Not used
60	AMUTE	O	Analog mute control output terminal "H": Mute
61	CLV-MUTE	O	CLV Mute control output treminal "H": Mute
62	RW	O	Read/Write switching signal output terminal "H": Read, "L": Write
63	MOTOR −	O	Lid motor control output
64	MOTOR+	O	
65	BBON	O	DBB control signal output
66	DACLT	O	CPU serial data input latch signal output
67	GFSMDF	—	Not used
68	XBRX	O	TRACKING BRAKE signal "L": Brake
69	BRX	—	Not used
70	XSEL1	O	At the reset, "H", which generates the voltage for destination selection
71	XSEL2	O	At the reset, "L", and normally "H" which switches the input of pin ㉕ "L" selects the destination, and "H" accepts the input of OPEN/CLOSE key
72	VDD	—	Power supply terminal
73	TX	—	Not used
74	TEX	—	Not used
75	NC	—	Not used
76	C2MN	O	C2PO signal control output terminal "L": Stop, "H": Searching
77	YMLT	O	CPU serial data input latch signal output terminal "L": Latch
78	$\overline{WP}$	I	Input terminal to reset the system stop status The stop status is reset with the falling edge of input signal
79	OPEN	I	Door switch input terminal The stop status is reset with the falling edge of input signal "L": CLOSE, "H": OPEN
80	SCOR	I	Sub code sync SO+S1 input terminal

	OPEN	CLOSE	STOP
⑥③	H	L	L
⑥④	L	H	L

6-2. PRINTED WIRING BOARD

- **Semiconductor Location (Component Side)**

Ref. No.	Location
D301	K-9
D302	J-9
D407	J-6
D408	H-7
D592	G-2
D601	J-4
D901	L-3
D902	K-2
D904	K-10
D905	L-4
D906	L-5
D907	L-6
D908	L-7
D909	L-7
IC504	I-5
IC601	J-4
IC603	K-6
IC802	L-6
Q102	I-8
Q202	I-8
Q302	J-9
Q404	I-6
Q504	I-3
Q506	J-5
Q601	J-4

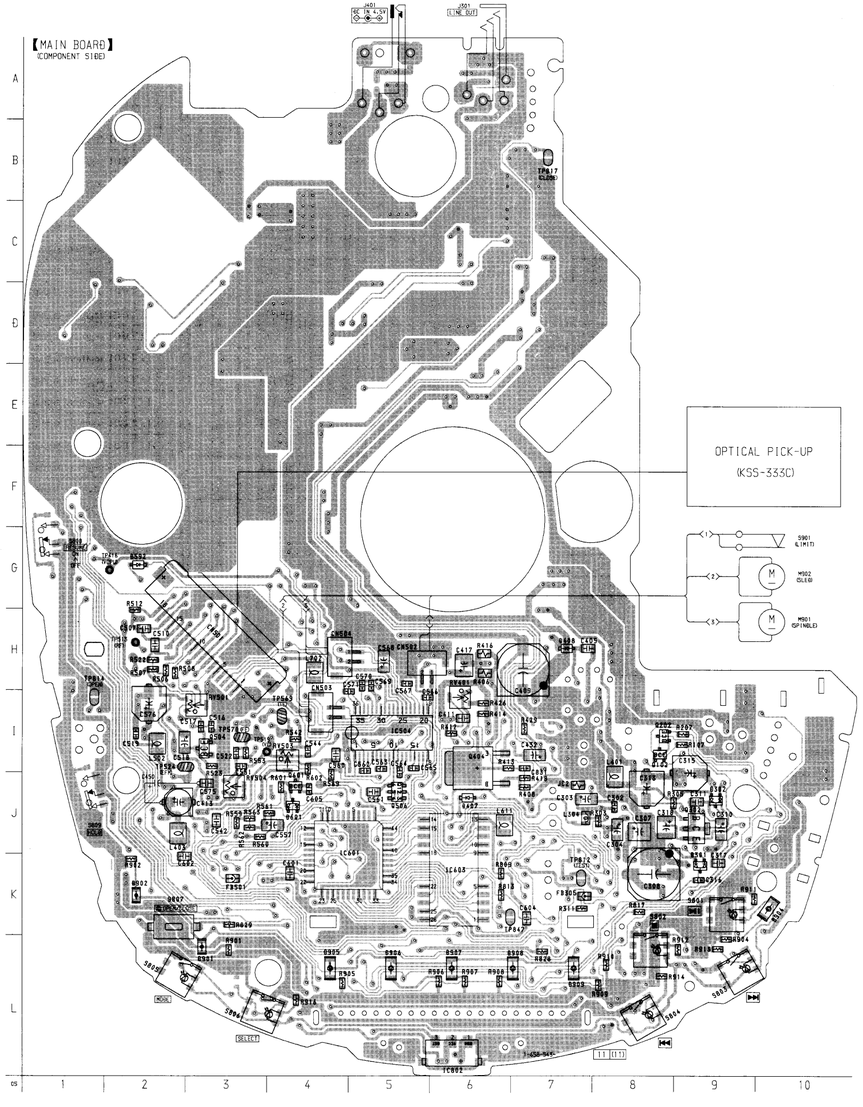

Note:
- ○——— : parts extracted from the component side.
- △ : internal component.
- ▒▒▒ : Pattern from the side which enables seeing.

(The other layers' patterns are not indicated.)

Caution:	
Pattern face side: (Conductor Side)	Parts on the pattern face side seen from the pattern face are indicated.
Parts face side: (Component Side)	Parts on the parts face side seen from the parts face are indicated.

- **Semiconductor Location (Conductor Side)**

Ref. No.	Location	Ref. No.	Location
D103	B-5	Q101	I-3
D104	J-1	Q201	I-3
D105	B-5	Q301	J-2
D106	J-1	Q401	H-4
D203	B-5	Q402	H-4
D204	K-1	Q403	I-4
D205	B-5	Q405	I-5
D206	K-1	Q406	E-5
D303	A-6	Q412	I-4
D304	J-1	Q501	H-8
D305	A-6	Q502	G-9
D306	J-1	Q503	G-9
D402	C-7	Q592	D-5
D403	D-7	Q602	I-7
D404	H-6	Q801	L-8
D405	E-7	Q802	L-9
D406	D-6	○Q803	L-4
D409	C-7	○Q804	L-6
D410	C-7	○Q805	L-3
D501	J-6	○Q806	C-8
D502	C-4	○Q807	C-9
D801	L-3	○Q808	C-9
D802	K-3	Q809	D-7
D803	K-9	Q810	K-7
D804	E-7	Q811	L-7
D805	K-9	○Q812	C-9
D806	K-9	Q901	K-8
D808	L-8	Q902	L-8
○D809	L-6		
○D810	L-5		
D812	K-9		
D910	K-3		
IC301	K-3		
IC302	J-2		
IC401	I-5		
IC403	D-5		
IC501	H-9		
IC502	J-8		
IC503	I-6		
IC505	C-5		
IC801	K-6		
○IC803	D-10		
○IC804	D-10		
○IC805	C-9		
○IC806	D-8		

Note:
○:D-848K ONLY

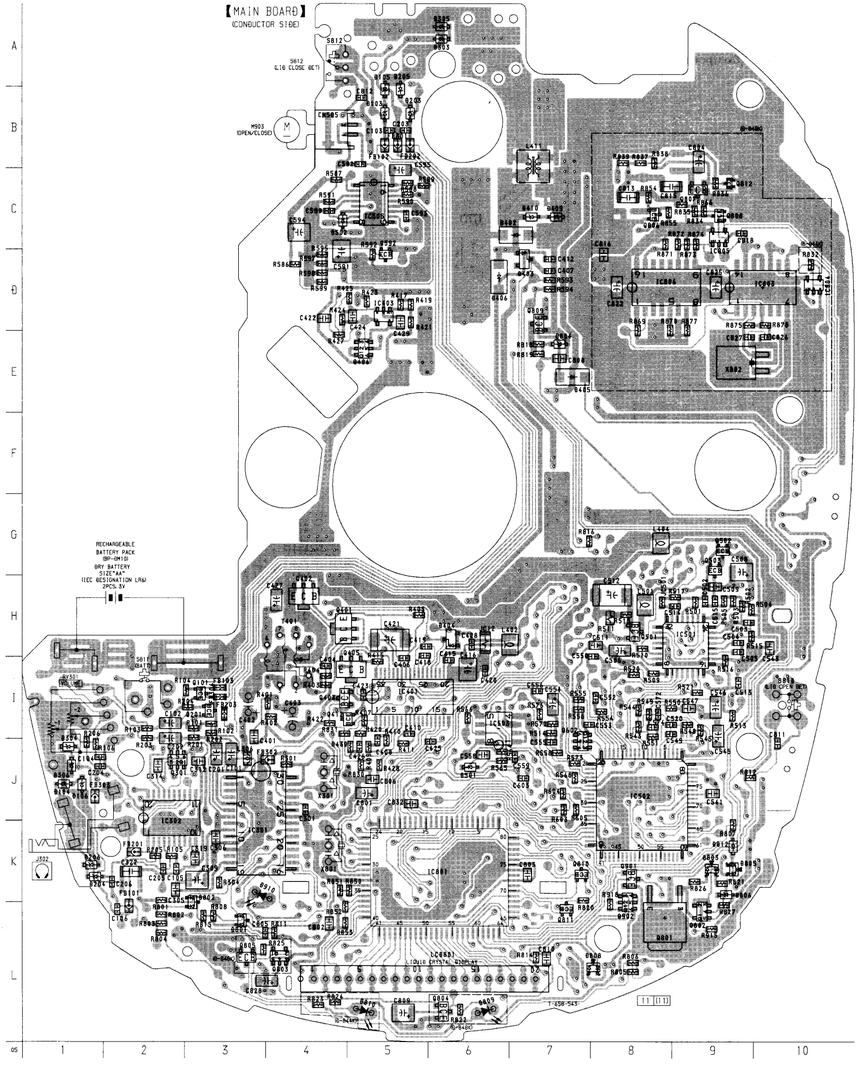

6-3. SCHEMATIC DIAGRAM • See pages 23 to 26 for IC Block Diagrams. • See page 22 for Waveforms.

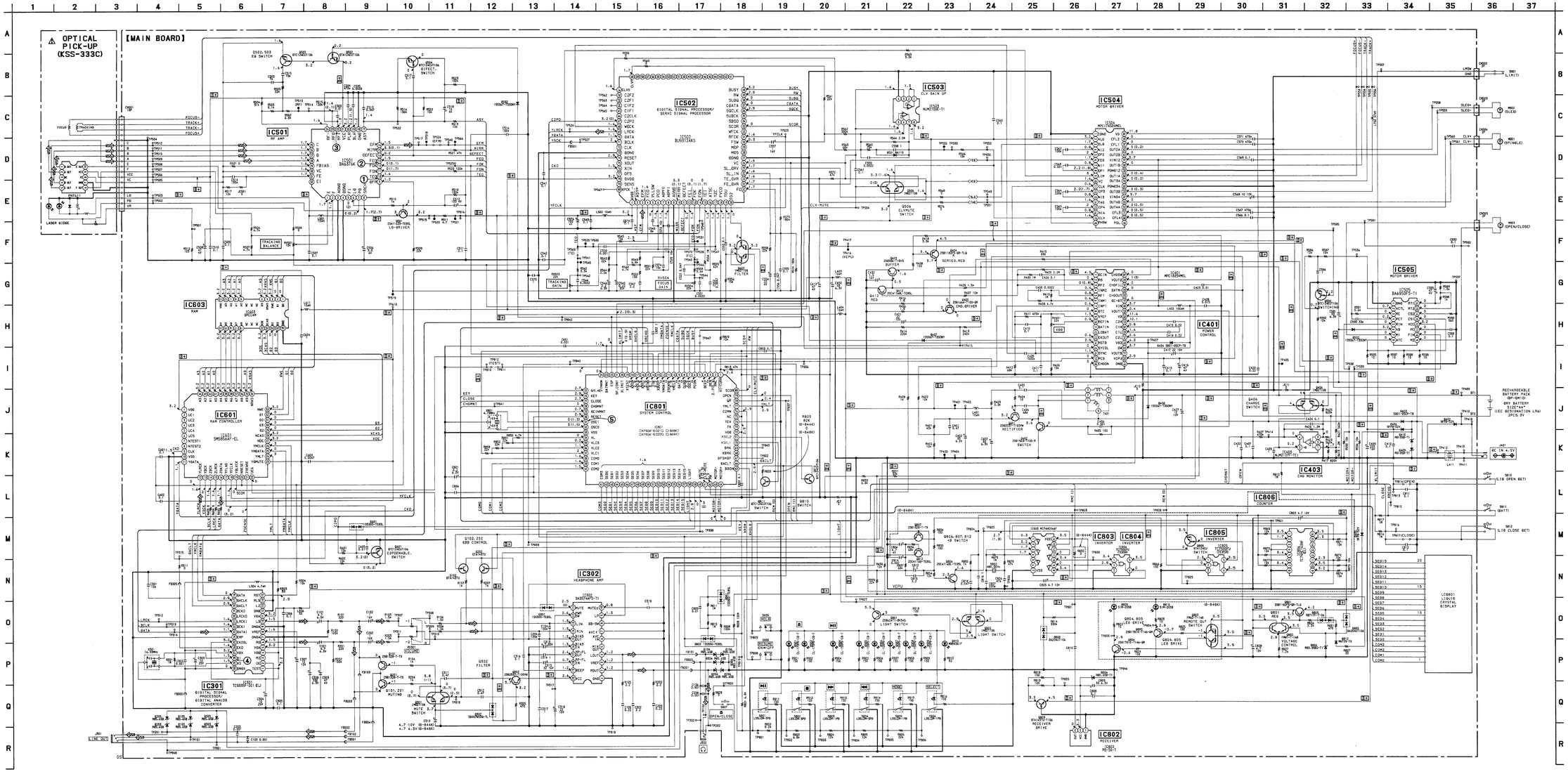

NOTE

- All capacitors are in μF unless otherwise noted. pF: μμF 50WV or less are not indicated except for electrolytics and tantalums.
- All resistors are in Ω and 1/4W or less unless otherwise specified.
- % :indicates tolerance.
- △ :internal component.
- ▭ :panel designation.

Note:	Note:
The components identified by mark ⚠ or dotted line with mark ⚠ are critical for safety. Replace only with part number specified.	Les composants identifiés par une marque ⚠ sont critiques pour la sécurité. Ne les remplacer que par une pièce portant le numéro spécifié.

- B+ :B+ Line.
- ▭ :adjustment for repair.
- Voltages and waveforms are dc with respect to ground in service mode.
  no mark: STOP
  ( ): PLAY
  ★ :can not be measured.
- Voltages are taken with a VOM (Input impedance 10MΩ). Voltage variations may be noted due to normal production tolerances.
- Waveforms are taken with a oscilloscope. Voltage variations may be noted due to normal production tolerances.
- Circled numbers refer to waveforms.
- Power voltage is dc 4.5V and fed with regulated dc power supply from external power voltage jack.
- Signal path.
  ⇨ :CD

• Waveforms

❶ IC501 ⑯ 500mV/DIV
1ms/DIV

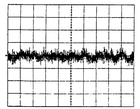

❷ IC501 ⑬ 500mV/DIV
10ms/DIV

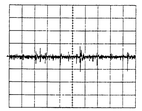

❸ IC501 ㉒ 500V/DIV
1 μs/DIV

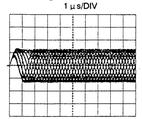

❹ IC301 ㉔

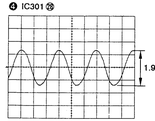

16.9MHz

❺ IC801 ⑬

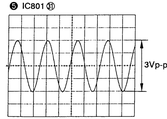

4.19MHz

❻ IC803 ③

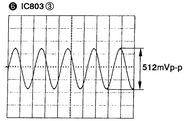

481kHz

• IC Block Diagrams

IC301 TC9335F-001 (EL)

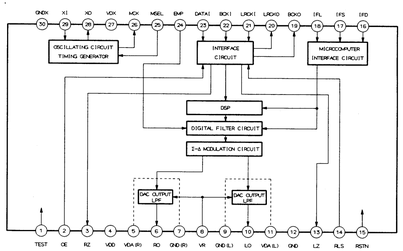

IC302 BA3574AFS

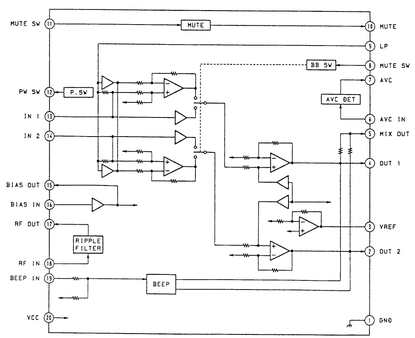

IC401 MPC1825AVMEL

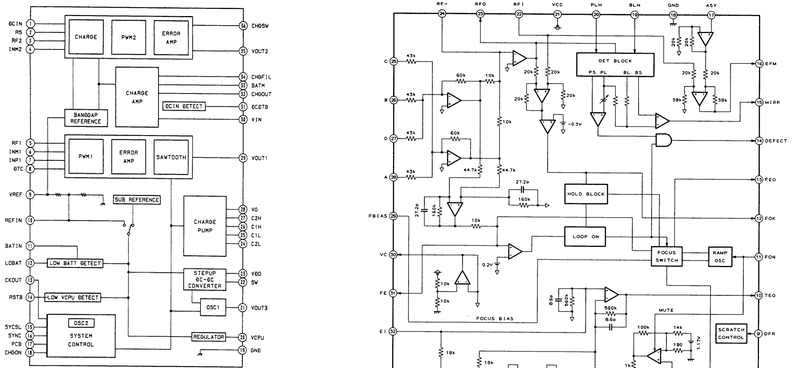

IC501 BA6376K

IC601 SM5856A1F

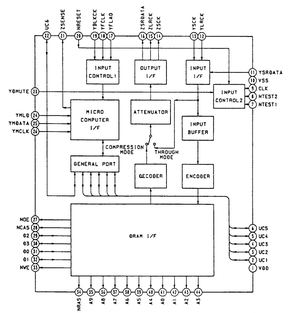

IC502 BU9312AKS

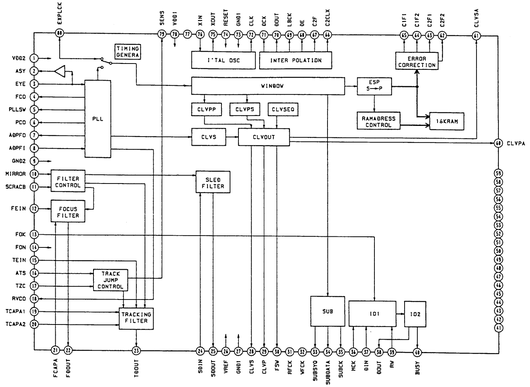

IC505 BA9650FS

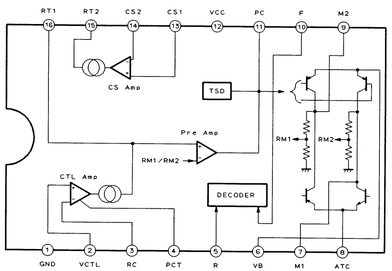

IC504 MPC17A50VMEL

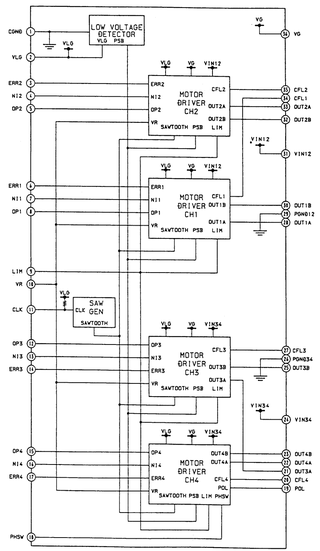

SECTION 7
EXPLODED VIEWS

NOTE:

- -XX and -X mean standardized parts, so they may have some difference from the original one.
- Color Indication of Appearance Parts
  Example:
  KNOB, BALANCE (WHITE) . . . (RED)
  ↑ Parts Color ↑ Cabinet's Color
- Items marked " * " are not stocked since they are seldom required for routine service. Some delay should be anticipated when ordering these items.
- The mechanical parts with no reference number in the exploded views are not supplied.
- Hardware (# mark) list and accessories and packing materials are given in the last of the electrical parts list.

The components identified by mark ⚠ or dotted line with mark ⚠ are critical for safety.
Replace only with part number specified.

Les composants identifiés par une marque ⚠ sont critiques pour la sécurité.
Ne les remplacer que par une pièce portant le neméro spécifié.

- Abbreviation
  844K : D-844K
  848K : D-848K
  CND : Canadian
  JE : Tourist

(1) CABINET SECTION - 1

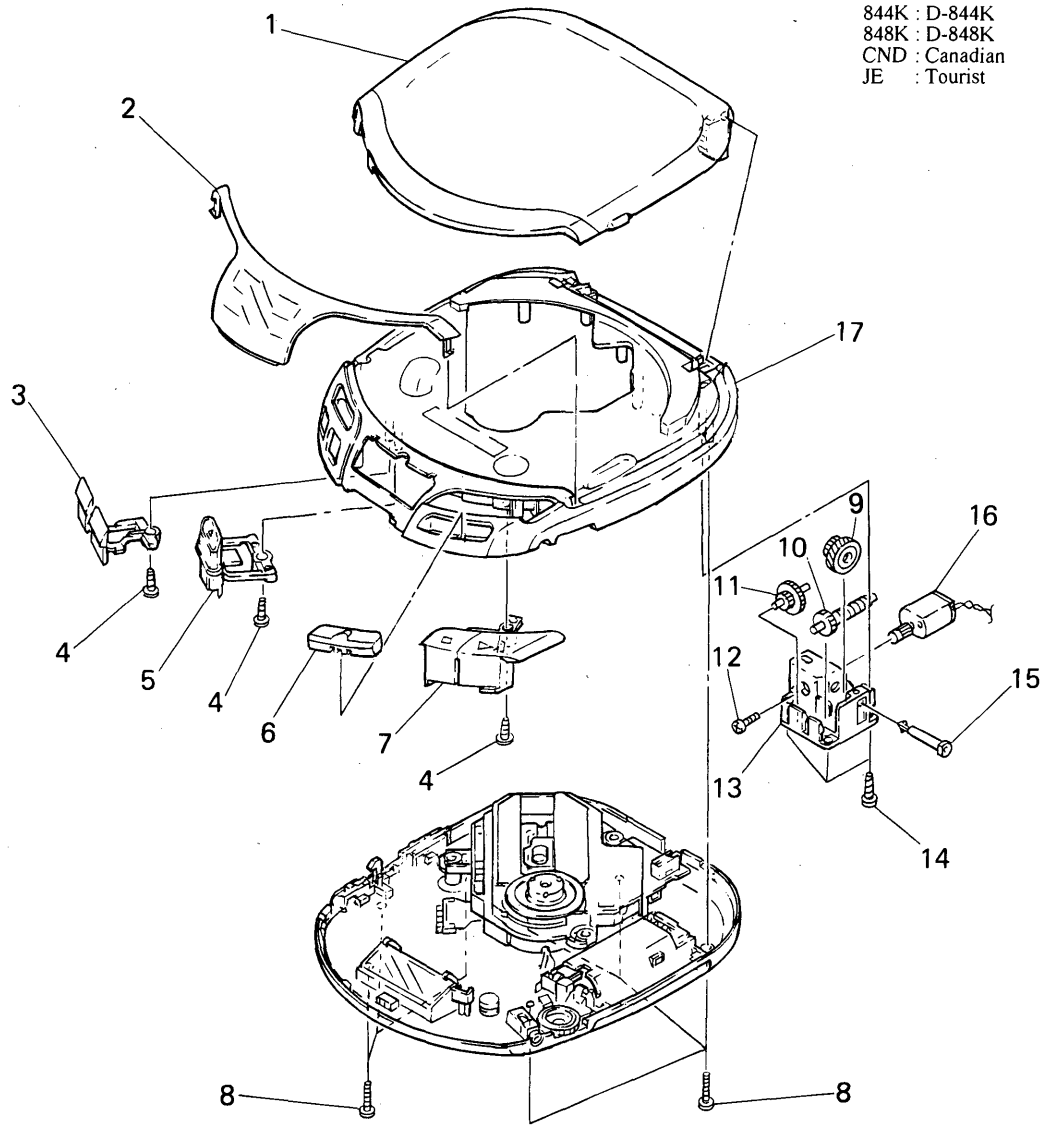

Ref. No.	Part No.	Description	Remark
1	4-977-051-01	LID, UPPER	
2	4-977-039-01	WINDOW (LCD-REMOCON) (848K)	
2	4-977-039-11	WINDOW (LCD-REMOCON) (844K)	
3	4-977-037-01	BUTTON (MODE-SELECT)	
4	3-374-079-11	SCREW (1.7X5), TAPPING	
5	4-977-038-01	BUTTON (OPEN/TUCT)	
6	4-977-036-01	BUTTON (FF. FR)	
7	4-977-035-01	BUTTON (PLAY. STOP)	
8	4-977-029-01	SCREW (M2X14)	
9	4-977-045-01	WHEEL, HELICAL	
10	4-977-046-01	WORM	
11	4-977-047-01	GEAR (B)	
12	4-977-050-01	SCREW (M2X4)	
13	4-977-040-01	CHASSIS	
14	4-951-291-01	SCREW	
15	4-977-044-01	SHAFT	
16	A-3303-993-A	MOTOR ASSY, DC	
17	X-4946-488-1	CABINET (UPPER) ASSY	

(2) CABINET SECTION - 2

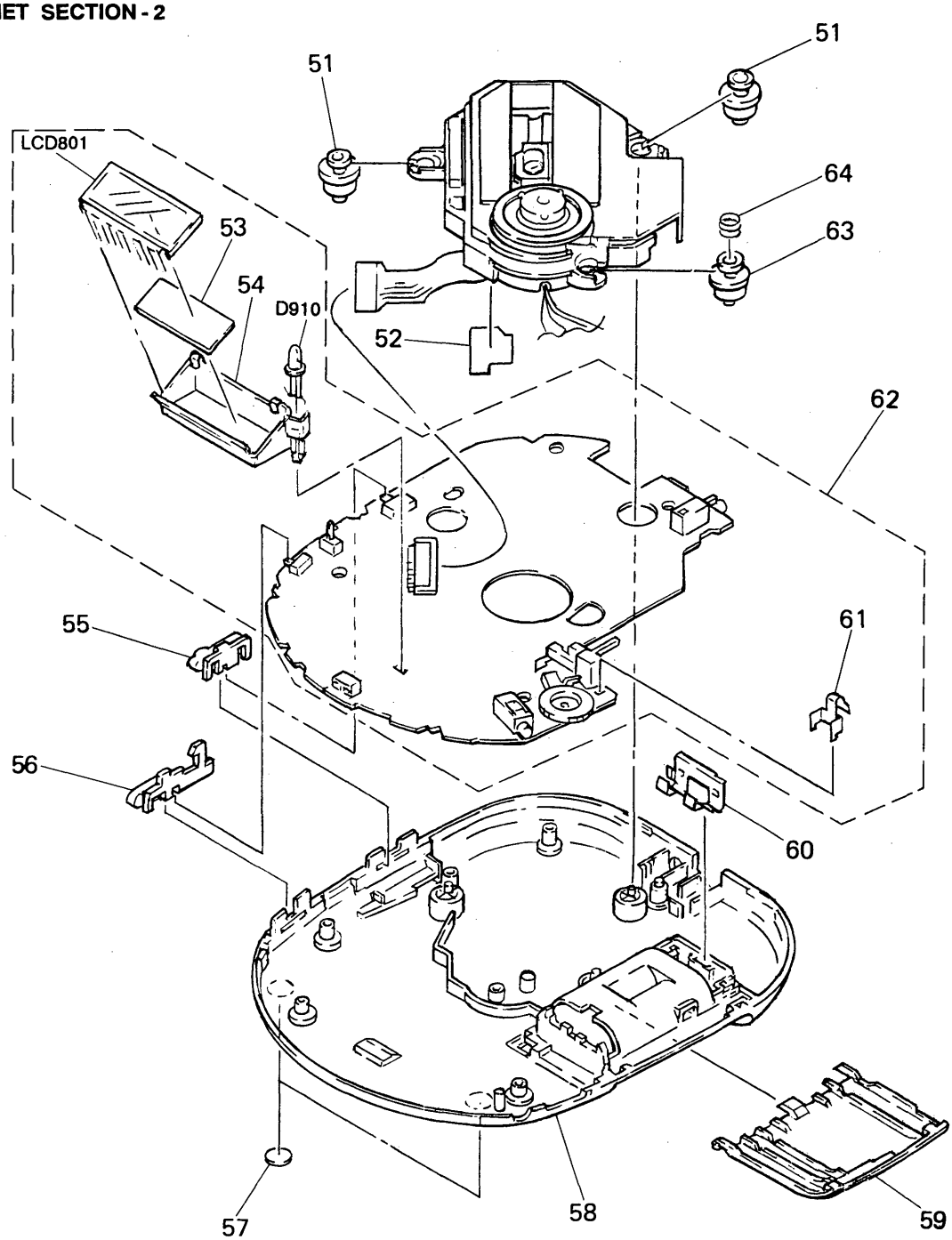

Ref. No.	Part No.	Description	Remark
51	4-976-275-01	INSULATOR	
52	4-956-818-01	RETAINER, FLEXIBLE	
53	4-977-043-01	ILLUMINATOR, (LCD)	
54	4-977-033-01	HOLDER (LCD)	
55	4-977-027-01	KNOB (RESUME)	
56	4-977-028-01	KNOB (HOLD)	
57	4-962-025-01	FOOT, RUBBER	
58	4-977-031-01	CABINET (LOWER) (848K:US, CND)	
58	4-977-031-11	CABINET (LOWER) (844K)	
58	4-977-031-41	CABINET (LOWER) (848K:JE)	
59	4-977-026-01	LID, BATTERY CASE	
60	4-978-000-01	TERMINAL (RELAY), BATTERY	
61	4-959-421-01	TEMINAL BOARD, BATTERY	
62	A-3276-860-A	MAIN BOARD, COMPLETE (848K)	
62	A-3276-861-A	MAIN BOARD, COMPLETE (844K)	
63	4-975-762-01	INSULATOR	
64	4-978-806-01	SPRING, COMPRESSION	
LCD801	1-810-995-11	DISPLAY PANEL, LIQUID CRYSTAL	
D910	8-719-971-23	LED MBG4361F	

(3) OPTICAL PICK-UP BLOCK SECTION (KSM-333CAN)

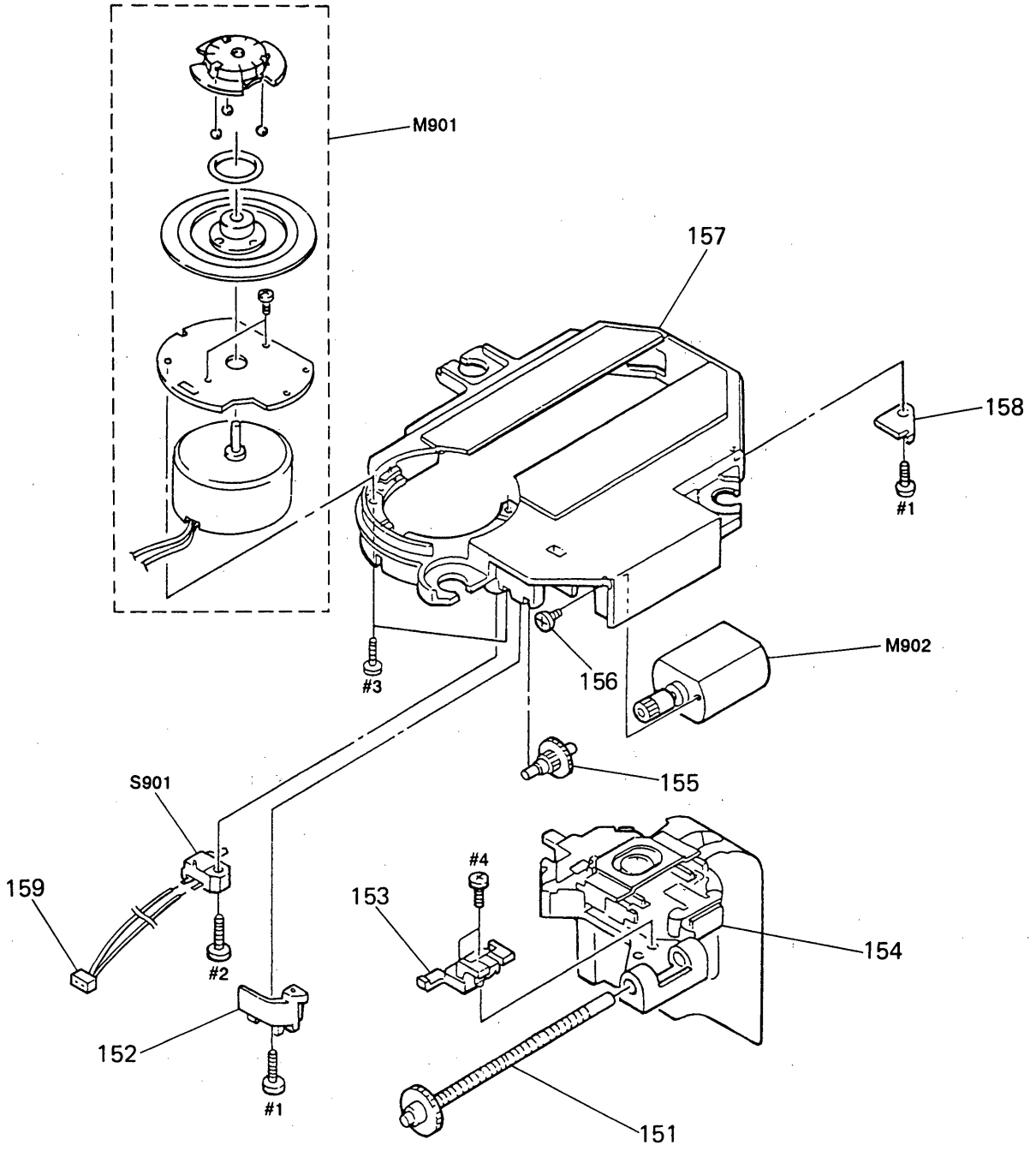

Ref. No.	Part No.	Description	Remark
151	X-2625-483-1	SCREW ASSY, SLED	
152	2-625-412-02	SPRING, SLED	
153	2-625-414-02	RACK	
⚠154	8-848-462-11	OPTICAL PICK-UP (KSS-333C)	
155	2-625-410-01	GEAR (B)	
156	3-732-988-01	SCREW (M2X2.5)	

Ref. No.	Part No.	Description	Remark
157	2-625-415-05	CHASSIS, MD	
158	2-625-411-01	RETAINER, SHAFT	
159	1-948-418-21	HARNESS	
M901	X-2625-485-1	MOTOR ASSY, T.T. (SPINDLE)	
M902	X-2625-171-2	MOTOR ASSY, SLED	
S901	1-570-771-11	SWITCH (LIMIT)	

Note: The components identified by mark ⚠ or dotted line with mark ⚠ are critical for safety. Replace only with part number specified.	Note: Les composants identifiés par une marque ⚠ sont critiques pour la sécurité. Ne les remplacer que par une pièce portant le neméro spécifié.

MAIN

SECTION 8
ELECTRICAL PARTS LIST

NOTE:
- Due to standardization, replacements in the parts list may be different from the parts specified in the diagrams or the components used on the set.
- -XX and -X mean standardized parts, so they may have some difference from the original one.
- RESISTORS
  All resistors are in ohms.
  METAL:Metal-film resistor.
  METAL OXIDE: Metal oxide-film resistor.
  F:nonflammable
- Abbreviation
  844K:D-844K 848K:D-848K E13:220-240V AC Area E33:100-240V AC Area E92:120V AC Area
  EA:Saudi Arabia JE:Tourist
- Items marked "*" are not stocked since they are seldom required for routine service. Some delay should be anticipated when ordering these items.
- SEMICONDUCTORS
  In each case, u:μ, for example:
  uA..: μA.. uPA..: μPA..
  uPB..: μPB.. uPC..: μPC.. uPD..: μPD..
- CAPACITORS
  uF: μF
- COILS
  uH: μH

When indicating parts by reference number, please include the board.

The components identified by mark ⚠ or dotted line with mark. ⚠ are critical for safety. Replace only with part number specified.

Les composants identifiés par une marque ⚠ sont critiques pour la sécurité.
Ne les remplacer que par une pièce portant le numéro spécifié.

Ref. No.	Part No.	Description			Remark
	A-3276-861-A	MAIN BOARD, COMPLETE(844K)			
	A-3276-860-A	MAIN BOARD, COMPLETE(848K)			
		**********			
		< CAPACITOR >			
C101	1-135-181-21	TANTAL. CHIP	4.7uF	20%	6.3V
C102	1-135-091-00	TANTAL. CHIP	1uF	20%	16V
C103	1-162-964-11	CERAMIC CHIP	0.001uF	10%	50V
C104	1-162-953-11	CERAMIC CHIP	100PF	5%	50V
C105	1-165-128-11	CERAMIC CHIP	0.22uF		16V
C106	1-162-964-11	CERAMIC CHIP	0.001uF	10%	50V
C201	1-135-181-21	TANTAL. CHIP	4.7uF	20%	6.3V
C202	1-135-091-00	TANTAL. CHIP	1uF	20%	16V
C203	1-162-964-11	CERAMIC CHIP	0.001uF	10%	50V
C204	1-162-953-11	CERAMIC CHIP	100PF	5%	50V
C205	1-165-128-11	CERAMIC CHIP	0.22uF		16V
C206	1-162-964-11	CERAMIC CHIP	0.001uF	10%	50V
C301	1-162-915-11	CERAMIC CHIP	10PF	0.5PF	50V
C302	1-162-964-11	CERAMIC CHIP	0.001uF	10%	50V
C303	1-135-259-11	TANTAL. CHIP	10uF		25V
C304	1-135-259-11	TANTAL. CHIP	10uF		25V
C305	1-163-038-00	CERAMIC CHIP	0.1uF		25V
C306	1-163-038-00	CERAMIC CHIP	0.1uF		25V
C307	1-104-851-11	TANTAL. CHIP	10uF	20%	10V
C308	1-128-391-11	ELECT	330uF	20%	6.3V
C309	1-104-908-11	TANTAL. CHIP	47uF	20%	4V
C310	1-135-181-21	TANTAL. CHIP	4.7uF	20%	6.3V(848K)
C310	1-135-210-11	TANTAL. CHIP	47uF	20%	10V(844K)
C311	1-164-005-11	CERAMIC CHIP	0.47uF		25V
C312	1-164-005-11	CERAMIC CHIP	0.47uF		25V
C313	1-126-603-11	ELECT CHIP	4.7uF	20%	35V
C314	1-164-346-11	CERAMIC CHIP	1uF		16V
C315	1-126-395-11	ELECT	22uF	20%	16V
C316	1-164-360-11	CERAMIC CHIP	0.1uF		16V
C317	1-164-346-11	CERAMIC CHIP	1uF		16V
C318	1-104-852-11	TANTAL. CHIP	22uF	20%	10V
C319	1-164-346-11	CERAMIC CHIP	1uF		16V
C322	1-164-337-11	CERAMIC CHIP	2.2uF		16V
C401	1-164-005-11	CERAMIC CHIP	0.47uF		25V
C402	1-115-310-00	ELECT(SOLID)	33uF	20%	6.3V
C403	1-127-485-00	ELECT(SOLID)	33uF	20%	6.3V
C404	1-162-951-11	CERAMIC CHIP	68PF	5%	50V
C405	1-163-038-00	CERAMIC CHIP	0.1uF		25V
C406	1-162-964-11	CERAMIC CHIP	0.001uF	10%	50V
C407	1-164-360-11	CERAMIC CHIP	0.1uF		16V
C408	1-162-966-11	CERAMIC CHIP	0.0022uF	10%	50V
C409	1-128-398-11	ELECT	220uF	20%	16V
C410	1-164-360-11	CERAMIC CHIP	0.1uF		16V
C411	1-163-038-00	CERAMIC CHIP	0.1uF		25V
C412	1-164-360-11	CERAMIC CHIP	0.1uF		16V
C413	1-126-607-11	ELECT CHIP	47uF	20%	4V
C415	1-164-360-11	CERAMIC CHIP	0.1uF		16V
C416	1-104-908-11	TANTAL. CHIP	47uF	20%	4V
C417	1-104-852-11	TANTAL. CHIP	22uF	20%	10V
C418	1-165-128-11	CERAMIC CHIP	0.22uF		16V
C419	1-165-128-11	CERAMIC CHIP	0.22uF		16V
C420	1-165-128-11	CERAMIC CHIP	0.22uF		16V
C421	1-104-852-11	TANTAL. CHIP	22uF	20%	10V
C422	1-164-346-11	CERAMIC CHIP	1uF		16V
C423	1-162-970-11	CERAMIC CHIP	0.01uF	10%	25V
C424	1-163-038-00	CERAMIC CHIP	0.1uF		25V
C425	1-164-357-11	CERAMIC CHIP	1000PF	5%	50V
C426	1-107-826-11	CERAMIC CHIP	0.1uF	10%	16V
C427	1-104-851-11	TANTAL. CHIP	10uF	20%	10V
C428	1-164-245-11	CERAMIC CHIP	0.015uF	10%	25V
C429	1-164-346-11	CERAMIC CHIP	1uF		16V
C432	1-135-148-21	TANTAL. CHIP	1.5uF	20%	16V
C450	1-115-310-00	ELECT(SOLID)	33uF	20%	6.3V
C502	1-162-912-11	CERAMIC CHIP	7PF	0.5PF	50V
C503	1-162-970-11	CERAMIC CHIP	0.01uF	10%	25V
C504	1-164-362-11	CERAMIC CHIP	470PF	5%	50V
C505	1-162-967-11	CERAMIC CHIP	0.0033uF	10%	50V
C506	1-135-180-21	TANTAL. CHIP	3.3uF	20%	6.3V
C507	1-163-038-00	CERAMIC CHIP	0.1uF		25V
C508	1-104-908-11	TANTAL. CHIP	47uF	20%	4V
C509	1-163-038-00	CERAMIC CHIP	0.1uF		25V
C510	1-163-038-00	CERAMIC CHIP	0.1uF		25V
C511	1-163-038-00	CERAMIC CHIP	0.1uF		25V
C512	1-104-848-11	TANTAL. CHIP	100uF	20%	4V
C513	1-165-176-11	CERAMIC CHIP	0.047uF	10%	16V

Ref. No.	Part No.	Description			Remark
C514	1-162-953-11	CERAMIC CHIP	100PF	5%	50V
C515	1-162-917-11	CERAMIC CHIP	15PF	5%	50V
C516	1-162-953-11	CERAMIC CHIP	100PF	5%	50V
C517	1-164-360-11	CERAMIC CHIP	0.1uF		16V
C518	1-135-201-11	TANTAL. CHIP	10uF	20%	4V
C519	1-107-826-11	CERAMIC CHIP	0.1uF	10%	16V
C520	1-162-915-11	CERAMIC CHIP	10PF	0.5PF	50V
C522	1-165-176-11	CERAMIC CHIP	0.047uF	10%	16V
C541	1-163-038-00	CERAMIC CHIP	0.1uF		25V
C542	1-163-038-00	CERAMIC CHIP	0.1uF		25V
C543	1-163-038-00	CERAMIC CHIP	0.1uF		25V
C544	1-162-966-11	CERAMIC CHIP	0.0022uF	10%	50V
C545	1-135-072-21	TANTAL. CHIP	0.22uF	20%	35V
C546	1-135-149-21	TANTAL. CHIP	2.2uF	20%	10V
C547	1-164-505-11	CERAMIC CHIP	2.2uF		16V
C549	1-162-913-11	CERAMIC CHIP	8PF	0.5PF	50V
C550	1-162-964-11	CERAMIC CHIP	0.001uF	10%	50V
C551	1-162-966-11	CERAMIC CHIP	0.0022uF	10%	50V
C552	1-162-968-11	CERAMIC CHIP	0.0047uF	10%	50V
C553	1-107-826-11	CERAMIC CHIP	0.1uF	10%	16V
C554	1-104-847-11	TANTAL. CHIP	22uF	20%	4V
C555	1-107-826-11	CERAMIC CHIP	0.1uF	10%	16V
C556	1-165-176-11	CERAMIC CHIP	0.047uF	10%	16V
C557	1-135-091-00	TANTAL. CHIP	1uF	20%	16V
C558	1-164-346-11	CERAMIC CHIP	1uF		16V
C559	1-162-966-11	CERAMIC CHIP	0.0022uF	10%	50V
C560	1-163-038-00	CERAMIC CHIP	0.1uF		25V
C561	1-163-038-00	CERAMIC CHIP	0.1uF		25V
C562	1-162-953-11	CERAMIC CHIP	100PF	5%	50V
C563	1-162-953-11	CERAMIC CHIP	100PF	5%	50V
C564	1-162-960-11	CERAMIC CHIP	220PF	10%	50V
C565	1-162-953-11	CERAMIC CHIP	100PF	5%	50V
C566	1-107-826-11	CERAMIC CHIP	0.1uF	10%	16V
C567	1-164-362-11	CERAMIC CHIP	470PF	5%	50V
C568	1-104-851-11	TANTAL. CHIP	10uF	20%	10V
C569	1-164-360-11	CERAMIC CHIP	0.1uF		16V
C570	1-164-362-11	CERAMIC CHIP	470PF	5%	50V
C571	1-164-362-11	CERAMIC CHIP	470PF	5%	50V
C572	1-162-915-11	CERAMIC CHIP	10PF	0.5PF	50V
C574	1-162-915-11	CERAMIC CHIP	10PF	0.5PF	50V
C575	1-164-346-11	CERAMIC CHIP	1uF		16V
C576	1-126-209-11	ELECT	100uF	20%	4V
C590	1-162-947-11	CERAMIC CHIP	33PF	5%	50V
C591	1-104-752-11	TANTAL. CHIP	33uF	20%	6.3V
C592	1-164-360-11	CERAMIC CHIP	0.1uF		16V
C593	1-164-360-11	CERAMIC CHIP	0.1uF		16V
C594	1-164-346-11	CERAMIC CHIP	1uF		16V
C595	1-135-163-21	TANTAL. CHIP	47uF	20%	4V
C601	1-163-038-00	CERAMIC CHIP	0.1uF		25V
C602	1-163-038-00	CERAMIC CHIP	0.1uF		25V
C603	1-162-968-11	CERAMIC CHIP	0.0047uF	10%	50V
C604	1-164-346-11	CERAMIC CHIP	1uF		16V
C605	1-162-970-11	CERAMIC CHIP	0.01uF	10%	25V
C801	1-135-149-21	TANTAL. CHIP	2.2uF	20%	10V
C802	1-163-038-00	CERAMIC CHIP	0.1uF		25V
C803	1-163-038-00	CERAMIC CHIP	0.1uF		25V
C804	1-104-908-11	TANTAL. CHIP	47uF	20%	4V(848K)
C805	1-162-970-11	CERAMIC CHIP	0.01uF	10%	25V
C806	1-164-346-11	CERAMIC CHIP	1uF		16V
C808	1-163-038-00	CERAMIC CHIP	0.1uF		25V
C809	1-104-752-11	TANTAL. CHIP	33uF	20%	6.3V
C810	1-164-346-11	CERAMIC CHIP	1uF		16V
C811	1-164-360-11	CERAMIC CHIP	0.1uF		16V
C812	1-164-360-11	CERAMIC CHIP	0.1uF		16V
C813	1-164-337-11	CERAMIC CHIP	2.2uF		16V(848K)
C815	1-164-337-11	CERAMIC CHIP	2.2uF		16V(848K)
C816	1-164-346-11	CERAMIC CHIP	1uF		16V(848K)
C818	1-165-176-11	CERAMIC CHIP	0.047uF	10%	16V(848K)
C822	1-135-210-11	TANTALUM CHIP	4.7uF	20%	10V(848K)
C825	1-135-210-11	TANTALUM CHIP	4.7uF	20%	10V(848K)
C826	1-162-949-11	CERAMIC CHIP	47PF	5%	50V(848K)
C827	1-162-957-11	CERAMIC CHIP	220PF	5%	50V(848K)
C828	1-135-210-11	TANTALUM CHIP	4.7uF	20%	10V
C831	1-162-964-11	CERAMIC CHIP	0.001uF	10%	50V
C832	1-164-346-11	CERAMIC CHIP	1uF		16V

< CONNECTOR >

CN501	1-566-534-11	CONNECTOR, FPC (ZIF) 18P	
* CN502	1-695-320-51	PIN, CONNECTOR (1.5MM) (SMD) 2P	
* CN503	1-695-320-31	PIN, CONNECTOR (1.5MM) (SMD) 2P	
* CN504	1-695-320-21	PIN, CONNECTOR (1.5MM) (SMD) 2P	
CN505	1-580-055-21	PIN, CONNECTOR 2P	

< DIODE >

D103	8-719-036-94	DIODE	RD5.6SB-T1
D104	8-719-036-94	DIODE	RD5.6SB-T1
D105	8-719-036-94	DIODE	RD5.6SB-T1
D106	8-719-036-94	DIODE	RD5.6SB-T1
D203	8-719-036-94	DIODE	RD5.6SB-T1
D204	8-719-036-94	DIODE	RD5.6SB-T1
D205	8-719-036-94	DIODE	RD5.6SB-T1
D206	8-719-036-94	DIODE	RD5.6SB-T1
D301	8-719-024-81	DIODE	1SS300-TE85L
D302	8-719-988-78	DIODE	SB007W03Q
D303	8-719-036-94	DIODE	RD5.6SB-T1
D304	8-719-036-94	DIODE	RD5.6SB-T1
D305	8-719-036-94	DIODE	RD5.6SB-T1
D306	8-719-036-94	DIODE	RD5.6SB-T1

MAIN

Ref. No.	Part No.	Description	Remark
D402	8-719-313-73	DIODE SFPB-52	
D403	8-719-938-72	DIODE SB01-05CP	
D404	8-719-938-72	DIODE SB01-05CP	
D405	8-719-313-73	DIODE SFPB-52	
D406	8-719-313-73	DIODE SFPB-52	
D407	8-719-049-09	DIODE 1SS367-T3SONY	
D408	8-719-049-09	DIODE 1SS367-T3SONY	
D409	8-719-037-25	DIODE RD13SB-T1	
D410	8-719-037-25	DIODE RD13SB-T1	
D501	8-719-404-46	DIODE MA110-TX	
D502	8-719-049-09	DIODE 1SS367-T3SONY	
D592	8-719-049-09	DIODE 1SS367-T3SONY	
D601	8-719-024-81	DIODE 1SS300-TE85L	
D801	8-719-024-81	DIODE 1SS300-TE85L	
D802	8-719-024-81	DIODE 1SS300-TE85L	
D803	8-719-989-08	DIODE RB717F	
D804	8-719-036-74	DIODE RD3.3SB-T1	
D805	8-719-941-23	DIODE DA204U	
D806	8-719-157-91	DIODE RD3.0SB2	
D808	8-719-941-23	DIODE DA204U	
D809	8-719-053-86	DIODE SIM-20SB(848K)	
D810	8-719-053-86	DIODE SIM-20SB(848K)	
D812	8-719-420-51	DIODE MA729-TX	
D901	8-719-033-14	LED CL-170PG-CD-T(OPEN)	
D902	8-719-033-14	LED CL-170PG-CD-T(OPEN)	
D904	8-719-987-43	LED CL-150PG-CD(▷❚❚)	
D905	8-719-987-43	LED CL-150PG-CD	
D906	8-719-987-43	LED CL-150PG-CD	
D907	8-719-987-43	LED CL-150PG-CD	
D908	8-719-987-43	LED CL-150PG-CD	
D909	8-719-987-43	LED CL-150PG-CD	
D910	8-719-971-23	LED MBG4361F	
		< FERRITE BEAD >	
FB101	1-500-245-11	BEAD, FERRITE (CHIP)	
FB102	1-500-245-11	BEAD, FERRITE (CHIP)	
FB103	1-500-238-11	BEAD, FERRITE (CHIP)	
FB201	1-500-245-11	BEAD, FERRITE (CHIP)	
FB202	1-500-245-11	BEAD, FERRITE (CHIP)	
FB203	1-500-238-11	BEAD, FERRITE (CHIP)	
FB301	1-500-245-11	BEAD, FERRITE (CHIP)	
FB302	1-500-245-11	BEAD, FERRITE (CHIP)	
FB303	1-500-245-11	BEAD, FERRITE (CHIP)	
FB304	1-500-238-11	BEAD, FERRITE (CHIP)	
FB305	1-500-245-11	BEAD, FERRITE (CHIP)	
FB501	1-500-245-11	BEAD, FERRITE (CHIP)	

Ref. No.	Part No.	Description	Remark
		< IC >	
IC301	8-759-342-98	IC TC9335F-001(EL)	
IC302	8-759-285-22	IC BA3574AFS	
IC401	8-759-356-04	IC MPC1825AVMEL	
IC403	8-759-710-79	IC NJM2107F	
IC501	8-759-335-59	IC BA6376K	
IC502	8-759-348-77	IC BU9312AKS	
IC503	8-759-293-74	IC NJM2100E-T1	
IC504	8-759-326-66	IC MPC17A50VMEL	
IC505	8-759-351-69	IC BA6950FS-T1	
IC601	8-759-351-65	IC SM5856A1F	
IC603	8-759-341-28	IC HM51W4400TT6-8	
IC801	8-752-870-01	IC CXP83416-022Q	(844K)
IC801	8-752-869-93	IC CXP83416-021Q	(848K)
IC802	8-759-177-23	IC RS-50-T	
IC803	8-759-032-11	IC MC74HC04AF	(848K)
IC804	8-759-058-54	IC TC7S00FU(TE85R)	(848K)
IC805	8-759-058-54	IC TC7S00FU(TE85R)	(848K)
IC806	8-759-232-74	IC TC74HC163AF	(848K)
		< JACK >	
J301	1-573-077-11	JACK(LINE OUT)	
J302	1-565-287-11	JACK(Ω)	
J401	1-691-099-11	JACK, DC(POLARITY UNIFIED TYPE)(DC IN 4.5V)	
		< CHIP CONDUCTOR >	
JC2	1-216-295-00	CONDUCTOR, CHIP (2012)	
JC12	1-216-296-00	CONDUCTOR, CHIP (3216)	
JC501	1-216-295-00	CONDUCTOR, CHIP (2012)	
		< COIL >	
L304	1-412-002-31	INDUCTOR CHIP 4.7uH	
L306	1-216-803-11	METAL CHIP 33 5% 1/16W	
L401	1-414-398-11	INDUCTOR CHIP 10uH	
L402	1-414-404-11	INDUCTOR CHIP 100uH	
L403	1-414-398-11	INDUCTOR CHIP 10uH	
L404	1-414-398-11	INDUCTOR CHIP 10uH	
L411	1-411-671-11	CHOKE FILTER, COMMON MODE	
L501	1-414-398-11	INDUCTOR CHIP 10uH	
L502	1-414-398-11	INDUCTOR CHIP 10uH	
L611	1-414-398-11	INDUCTOR CHIP 10uH	
L702	1-412-402-11	INDUCTOR CHIP 47uH	
		< REQUID CRYSTAL >	
LCD801	1-810-995-11	DISPLAY PANEL, REQUID CRYSTAL	
		< TRANSISTOR >	
Q101	8-729-400-56	TRANSISTOR 2SD1328-T	

Ref. No.	Part No.	Description		Remark
Q102	8-729-924-04	TRANSISTOR	DTA143TU	
Q201	8-729-400-56	TRANSISTOR	2SD1328-T	
Q202	8-729-924-04	TRANSISTOR	DTA143TU	
Q301	8-729-907-39	TRANSISTOR	IMD2	
Q302	8-729-031-11	TRANSISTOR	2SD2537-T100VW	
Q401	8-729-031-11	TRANSISTOR	2SD2537-T100VW	
Q402	8-729-923-36	TRANSISTOR	2SD1963-Q.R	
Q403	8-729-141-75	TRANSISTOR	2SD596DV345	
Q404	8-729-921-93	TRANSISTOR	2SB1182F5-QR	
Q405	8-729-920-85	TRANSISTOR	2SD1664-QR	
Q406	8-729-907-39	TRANSISTOR	IMD2	
Q412	8-729-231-74	TRANSISTOR	2SC4116-GL	
Q501	8-729-216-22	TRANSISTOR	2SA1162-G	
Q502	8-729-028-83	TRANSISTOR	DTA124EUA-T106	
Q502	8-729-905-57	TRANSISTOR	DTA124EU	
Q503	8-729-029-06	TRANSISTOR	DTC124EUA-T106	
Q503	8-729-905-61	TRANSISTOR	DTC124EU	
Q504	8-729-029-06	TRANSISTOR	DTC124EUA-T106	
Q504	8-729-905-61	TRANSISTOR	DTC124EU	
Q506	8-729-907-39	TRANSISTOR	IMD2	
Q592	8-729-029-06	TRANSISTOR	DTC124EUA-T106	
Q592	8-729-905-61	TRANSISTOR	DTC124EU	
Q601	8-729-029-06	TRANSISTOR	DTC124EUA-T106	
Q601	8-729-905-61	TRANSISTOR	DTC124EU	
Q602	8-729-907-39	TRANSISTOR	IMD2	
Q801	8-729-921-93	TRANSISTOR	2SB1182F5-QR	
Q802	8-729-903-10	TRANSISTOR	FMW1	
Q803	8-729-904-20	TRANSISTOR	FMA2	(848K)
Q804	8-729-921-73	TRANSISTOR	2SD1781K-QR	(848K)
Q805	8-729-921-73	TRANSISTOR	2SD1781K-QR	(848K)
Q806	8-729-231-74	TRANSISTOR	2SC4116-GL	(848K)
Q807	8-729-400-56	TRANSISTOR	2SC1328-T	(848K)
Q808	8-729-905-57	TRANSISTOR	DTA124EU	(848K)
Q809	8-729-924-04	TRANSISTOR	DTA143TU	
Q810	8-729-905-61	TRANSISTOR	DTC124EU	
Q811	8-729-905-61	TRANSISTOR	DTC124EU	
Q812	8-729-231-74	TRANSISTOR	2SC4116GL-TE85L	
Q901	8-729-141-48	TRANSISTOR	2SB624-BV345	
Q902	8-729-907-39	TRANSISTOR	IMD2	

< RESISTOR >

Ref. No.	Part No.	Description				Remark
R101	1-216-813-11	METAL CHIP	220	5%	1/16W	
R102	1-216-845-11	METAL CHIP	100K	5%	1/16W	
R103	1-216-825-11	METAL CHIP	1.5K	5%	1/16W	
R104	1-216-821-11	METAL CHIP	1K	5%	1/16W	
R105	1-216-789-11	METAL CHIP	2.2	5%	1/16W	
R106	1-216-823-11	METAL CHIP	1.5K	5%	1/16W	
R107	1-216-821-11	METAL CHIP	1K	5%	1/16W	
R201	1-216-813-11	METAL CHIP	220	5%	1/16W	
R202	1-216-845-11	METAL CHIP	100K	5%	1/16W	
R203	1-216-825-11	METAL CHIP	1.5K	5%	1/16W	
R204	1-216-821-11	METAL CHIP	1K	5%	1/16W	
R205	1-216-789-11	METAL CHIP	2.2	5%	1/16W	
R206	1-216-823-11	METAL CHIP	1.5K	5%	1/16W	
R207	1-216-821-11	METAL CHIP	1K	5%	1/16W	
R301	1-216-857-11	METAL CHIP	1M	5%	1/16W	
R303	1-216-803-11	METAL CHIP	33	5%	1/16W	
R304	1-216-833-11	METAL CHIP	10K	5%	1/16W	
R305	1-216-817-11	METAL CHIP	470	5%	1/16W	
R311	1-216-864-11	CONDUCTOR, CHIP (1608)				
R401	1-218-886-11	METAL CHIP	43K	0.50%	1/16W	
R402	1-218-716-11	METAL CHIP	10K	0.50%	1/16W	
R403	1-216-827-11	METAL CHIP	3.3K	5%	1/16W	
R404	1-216-797-11	METAL CHIP	10	5%	1/16W	
R405	1-216-809-11	METAL CHIP	100	5%	1/16W	
R406	1-217-907-11	METAL CHIP	1.8	5%	1/10W	
R407	1-216-833-11	METAL CHIP	10K	5%	1/16W	
R408	1-216-809-11	METAL CHIP	100	5%	1/16W	
R409	1-216-829-11	METAL CHIP	4.7K	5%	1/16W	
R410	1-216-857-11	METAL CHIP	1M	5%	1/16W	
R411	1-216-853-11	METAL CHIP	470K	5%	1/16W	
R412	1-216-843-11	METAL CHIP	68K	5%	1/16W	
R413	1-218-749-11	METAL CHIP	240K	0.50%	1/16W	
R414	1-218-748-11	METAL CHIP	220K	0.50%	1/16W	
R415	1-216-815-11	METAL CHIP	330	5%	1/16W	
R416	1-217-907-11	METAL CHIP	1.8	5%	1/10W	
R417	1-216-856-11	METAL CHIP	820K	5%	1/16W	
R418	1-216-827-11	METAL CHIP	3.3K	5%	1/16W	
R419	1-216-858-11	METAL GLAZE	1.2M	5%	1/16W	
R420	1-216-861-11	METAL CHIP	2.2M	5%	1/16W	
R421	1-216-854-11	METAL CHIP	560K	5%	1/16W	
R422	1-216-833-11	METAL CHIP	10K	5%	1/16W	
R423	1-216-854-11	METAL CHIP	560K	5%	1/16W	
R424	1-216-858-11	METAL GLAZE	1.2M	5%	1/16W	
R425	1-216-856-11	METAL CHIP	820K	5%	1/16W	
R426	1-216-835-11	METAL CHIP	15K	5%	1/16W	
R427	1-216-853-11	METAL CHIP	470K	5%	1/16W	
R428	1-216-821-11	METAL CHIP	1K	5%	1/16W	
R429	1-216-823-11	METAL CHIP	1.5K	5%	1/16W	
R430	1-216-857-11	METAL CHIP	1M	5%	1/16W	
R501	1-216-864-11	METAL CHIP	0	5%	1/16W	
R502	1-216-831-11	METAL CHIP	6.8K	5%	1/16W	
R503	1-218-345-11	METAL GLAZE	9.1K	5%	1/16W	
R504	1-218-347-11	METAL CHIP	91K	5%	1/16W	
R505	1-216-837-11	METAL CHIP	22K	5%	1/16W	
R506	1-216-829-11	METAL CHIP	4.7K	5%	1/16W	
R507	1-216-829-11	METAL CHIP	4.7K	5%	1/16W	

MAIN

Ref. No.	Part No.	Description				Remark
R508	1-216-864-11	METAL CHIP	0	5%	1/16W	
R509	1-216-837-11	METAL CHIP	22K	5%	1/16W	
R510	1-216-821-11	METAL CHIP	1K	5%	1/16W	
R511	1-216-308-00	METAL CHIP	4.7	5%	1/10W	
R512	1-216-809-11	METAL CHIP	100	5%	1/16W	
R513	1-216-833-11	METAL CHIP	10K	5%	1/16W	
R514	1-216-848-11	METAL CHIP	180K	5%	1/16W	
R515	1-216-846-11	METAL CHIP	120K	5%	1/16W	
R516	1-218-332-11	METAL CHIP	130K	5%	1/16W	
R517	1-216-833-11	METAL CHIP	10K	5%	1/16W	
R518	1-216-845-11	METAL CHIP	100K	5%	1/16W	
R520	1-216-846-11	METAL CHIP	120K	5%	1/16W	
R521	1-216-841-11	METAL CHIP	47K	5%	1/16W	
R522	1-216-833-11	METAL CHIP	10K	5%	1/16W	
R523	1-216-845-11	METAL CHIP	100K	5%	1/16W	
R542	1-216-827-11	METAL CHIP	3.3K	5%	1/16W	
R543	1-218-724-11	METAL CHIP	22K	0.50%	1/16W	
R544	1-216-825-11	METAL CHIP	2.2K	5%	1/16W	
R545	1-218-720-11	METAL CHIP	15K	0.50%	1/16W	
R548	1-218-708-11	METAL CHIP	4.7K	0.50%	1/16W	
R549	1-218-867-11	METAL CHIP	6.8K	0.50%	1/16W	
R550	1-216-811-11	METAL CHIP	150	5%	1/16W	
R551	1-216-837-11	METAL CHIP	22K	5%	1/16W	
R553	1-218-710-11	METAL CHIP	5.6K	0.50%	1/16W	
R554	1-216-857-11	METAL CHIP	1M	5%	1/16W	
R555	1-218-447-11	METAL GLAZE	62K	5%	1/16W	
R556	1-216-835-11	METAL CHIP	15K	5%	1/16W	
R558	1-216-837-11	METAL CHIP	22K	5%	1/16W	
R559	1-216-864-11	METAL CHIP	0	5%	1/16W	
R560	1-216-864-11	METAL CHIP	0	5%	1/16W	
R561	1-216-837-11	METAL CHIP	22K	5%	1/16W	
R562	1-216-851-11	METAL CHIP	330K	5%	1/16W	
R563	1-216-843-11	METAL CHIP	68K	5%	1/16W	
R564	1-216-861-11	METAL CHIP	2.2M	5%	1/16W	
R565	1-218-296-11	METAL CHIP	75K	5%	1/16W	
R566	1-216-833-11	METAL CHIP	10K	5%	1/16W	
R568	1-216-864-11	METAL CHIP	0	5%	1/16W	
R569	1-216-827-11	METAL CHIP	3.3K	5%	1/16W	
R572	1-216-841-11	METAL CHIP	47K	5%	1/16W	
R573	1-216-848-11	METAL CHIP	180K	5%	1/16W	
R576	1-216-864-11	METAL CHIP	0	5%	1/16W	
R586	1-216-833-11	METAL CHIP	10K	5%	1/16W	
R587	1-216-833-11	METAL CHIP	10K	5%	1/16W	
R588	1-216-821-11	METAL CHIP	1K	5%	1/16W	
R589	1-216-823-11	METAL CHIP	1.5K	5%	1/16W	
R590	1-216-818-11	METAL CHIP	560	5%	1/16W	
R591	1-216-830-11	METAL CHIP	5.6K	5%	1/16W	
R592	1-216-833-11	METAL CHIP	10K	5%	1/16W	
R593	1-216-833-11	METAL CHIP	10K	5%	1/16W	
R594	1-216-833-11	METAL CHIP	10K	5%	1/16W	
R595	1-216-797-11	METAL CHIP	10	5%	1/16W	
R597	1-216-797-11	METAL CHIP	10	5%	1/16W	
R598	1-216-797-11	METAL CHIP	10	5%	1/16W	
R599	1-216-797-11	METAL CHIP	10	5%	1/16W	
R601	1-216-833-11	METAL CHIP	10K	5%	1/16W	
R602	1-216-833-11	METAL CHIP	10K	5%	1/16W	
R603	1-216-864-11	METAL CHIP	0	5%	1/16W	
R604	1-216-864-11	METAL CHIP	0	5%	1/16W	
R605	1-216-864-11	METAL CHIP	0	5%	1/16W	
R801	1-216-831-11	METAL CHIP	6.8K	5%	1/16W	
R802	1-216-832-11	METAL CHIP	8.2K	5%	1/16W	
R803	1-216-831-11	METAL CHIP	6.8K	5%	1/16W	
R804	1-216-834-11	METAL CHIP	12K	5%	1/16W	
R805	1-216-834-11	METAL CHIP	12K	5%	1/16W	
R806	1-216-837-11	METAL CHIP	22K	5%	1/16W	
R807	1-216-803-11	METAL CHIP	33	5%	1/16W	
R808	1-218-740-11	METAL CHIP	100K	0.50%	1/16W	
R809	1-216-833-11	METAL CHIP	10K	5%	1/16W	
R811	1-216-857-11	METAL CHIP	1M	5%	1/16W	
R812	1-216-857-11	METAL CHIP	1M	5%	1/16W	
R813	1-216-841-11	METAL CHIP	47K	5%	1/16W	
R814	1-216-851-11	METAL CHIP	330K	5%	1/16W	
R815	1-216-857-11	METAL CHIP	1M	5%	1/16W	
R816	1-216-857-11	METAL CHIP	1M	5%	1/16W	
R817	1-216-857-11	METAL CHIP	1M	5%	1/16W	
R818	1-216-809-11	METAL CHIP	100	5%	1/16W	
R819	1-216-809-11	METAL CHIP	100	5%	1/16W	
R820	1-216-844-11	METAL CHIP	82K	5%	1/16W	(844K)
R820	1-216-864-11	CONDUCTOR, CHIP (1608)				(848K)
R821	1-216-817-11	METAL CHIP	470	5%	1/16W	
R822	1-216-797-11	METAL CHIP	10	5%	1/16W	(848K)
R823	1-216-797-11	METAL CHIP	10	5%	1/16W	(848K)
R824	1-216-809-11	METAL CHIP	100	5%	1/16W	(848K)
R825	1-216-809-11	METAL CHIP	100	5%	1/16W	(848K)
R826	1-216-825-11	METAL CHIP	2.2K	5%	1/16W	
R827	1-216-822-11	METAL CHIP	1.2K	5%	1/16W	
R828	1-216-845-11	METAL CHIP	100K	5%	1/16W	
R829	1-216-864-11	METAL CHIP	0	5%	1/16W	
R830	1-218-867-11	METAL CHIP	6.8K	0.50%	1/16W	
R831	1-218-883-11	METAL CHIP	33K	0.50%	1/16W	
R832	1-216-864-11	METAL CHIP	0	5%	1/16W	(844K)
R834	1-216-809-11	METAL CHIP	100	5%	1/16W	(848K)
R835	1-216-809-11	METAL CHIP	100	5%	1/16W	(848K)
R836	1-216-843-11	METAL CHIP	68K	5%	1/16W	(848K)
R837	1-216-843-11	METAL CHIP	68K	5%	1/16W	(848K)
R838	1-216-833-11	METAL CHIP	10K	5%	1/16W	(848K)
R839	1-216-837-11	METAL CHIP	22K	5%	1/16W	(848K)
R850	1-216-829-11	METAL CHIP	4.7K	5%	1/16W	

Ref. No.	Part No.	Description			Remark
R851	1-216-837-11	METAL CHIP	22K	5%	1/16W
R852	1-216-837-11	METAL CHIP	22K	5%	1/16W
R853	1-216-837-11	METAL CHIP	22K	5%	1/16W
R854	1-216-833-11	METAL CHIP	10K	5%	1/16W(848K)
R855	1-216-821-11	METAL CHIP	1K	5%	1/16W(848K)
R866	1-216-809-11	METAL CHIP	100	5%	1/16W(848K)
R869	1-216-833-11	METAL CHIP	10K	5%	1/16W(848K)
R870	1-216-833-11	METAL CHIP	10K	5%	1/16W(848K)
R871	1-216-833-11	METAL CHIP	10K	5%	1/16W(848K)
R872	1-216-833-11	METAL CHIP	10K	5%	1/16W(848K)
R873	1-216-833-11	METAL CHIP	10K	5%	1/16W(848K)
R874	1-216-833-11	METAL CHIP	10K	5%	1/16W(848K)
R875	1-216-857-11	METAL CHIP	1M	5%	1/16W(848K)
R877	1-216-833-11	METAL CHIP	10K	5%	1/16W(848K)
R878	1-216-841-11	METAL CHIP	47K	5%	1/16W(848K)
R901	1-216-811-11	METAL CHIP	150	5%	1/16W
R902	1-216-811-11	METAL CHIP	150	5%	1/16W
R904	1-216-811-11	METAL CHIP	150	5%	1/16W
R905	1-216-811-11	METAL CHIP	150	5%	1/16W
R906	1-216-811-11	METAL CHIP	150	5%	1/16W
R907	1-216-811-11	METAL CHIP	150	5%	1/16W
R908	1-216-811-11	METAL CHIP	150	5%	1/16W
R909	1-216-811-11	METAL CHIP	150	5%	1/16W
R910	1-216-808-11	METAL CHIP	82	5%	1/16W
R911	1-216-811-11	METAL CHIP	150	5%	1/16W
R912	1-216-810-11	METAL CHIP	120	5%	1/16W
R913	1-216-811-11	METAL CHIP	150	5%	1/16W
R914	1-216-811-11	METAL CHIP	150	5%	1/16W
R915	1-216-811-11	METAL CHIP	150	5%	1/16W
R916	1-216-811-11	METAL CHIP	150	5%	1/16W
R918	1-216-809-11	METAL CHIP	100	5%	1/16W

< VARIABLE RESISTOR >

RV301	1-223-469-11	RES, VAR, CARBON 10K/10K(◢VOLUME)
RV401	1-223-578-11	RES, ADJ, METAL GLAZE 22K
RV501	1-223-695-11	RES, ADJ, METAL GLAZE 10K
RV503	1-223-578-11	RES, ADJ, METAL GLAZE 22K
RV504	1-223-578-11	RES, ADJ, METAL GLAZE 22K

< SWITCH >

S801	1-762-470-11	SWITCH (WITH LED) (▷❚❚)
S802	1-762-470-11	SWITCH (WITH LED) (■)
S803	1-762-469-11	SWITCH (WITH LED) (▶▶❚)
S804	1-762-470-11	SWITCH (WITH LED) (❚◀◀)
S805	1-762-469-11	SWITCH (WITH LED) (MODE)
S806	1-762-469-11	SWITCH (WITH LED) (SELECT)
S807	1-572-473-11	SWITCH, TACTIL(⏏)
S808	1-572-922-11	SWITCH, SLIDE(RESUME)
S809	1-572-922-11	SWITCH, SLIDE(HOLD◢)
S810	1-570-953-11	SWITCH, PUSH (1 KEY) (LID OPEN DET)
S811	1-572-126-21	SWITCH, PUSH (1 KEY) (BATT DET)
S812	1-692-695-11	SWITCH, PUSH (1 KEY) (LID CLOSE DET)

< TRANSFORMER >

T401	1-427-958-11	TRANSFORMER, DC-DC CONVERTER

< VIBRATOR >

X301	1-760-307-11	VIBRATOR, CERAMIC (16.93MHz)
X801	1-760-641-21	VIBRATOR, CERAMIC (4.19MHz)
X802	1-577-093-11	OSCILLATOR, CERAMIC (480.0KHz) (848K)

****

MISCELLANEOUS
****

⚠154	8-848-462-11	OPTICAL PICK-UP (KSS-333C)
159	1-948-418-21	HARNESS
M901	X-2625-485-1	MOTOR ASSY, T.T. (SPINDLE)
M902	X-2625-171-2	MOTOR ASSY, SLED
S901	1-570-771-11	SWITCH (LIMIT)

****

****
HARDWARE LIST
****

#1	7-685-104-19	SCREW (2X6), TAPPING (B)
#2	7-685-105-19	SCREW (2X8), TAPPING (B)
#3	7-627-852-17	+P 1.7X4
#4	7-627-852-18	SCREW, PRECISION +P 1.7X4 TYPE3

****

ACCESSORIES & PACKING MATERIALS
****

⚠	1-467-008-11	ADAPTOR, AC (AC-E455) (844K:E13)
⚠	1-467-009-11	ADAPTOR, AC (AC-E455) (844K:US, E92/848K:US, Canadian)
⚠	1-467-012-11	ADAPTOR, AC (AC-E455) (844K:EA)
⚠	1-467-550-11	ADAPTOR, AC (AC-E455A) (844K:E33/848K:JE)
⚠	1-473-115-11	ADAPTOR, AC (AC-E455A) (844K:UK)
⚠	1-473-116-31	ADAPTOR, AC (AC-E455D) (844K:AEP)
	1-473-360-11	REMOTE COMMANDER (RM-DM30) (844K)
	1-532-360-XX	FUSE (For FVV-R2455)
⚠	1-569-007-11	ADAPTER, CONVERSION 2P (844K:E33, E92/848K:JE)
⚠	1-569-008-11	ADAPTER, CONVERSION 2P (844K:E13, EA)
	1-751-419-11	CORD, CONNECTION (844K:EXCEPT US /848K:Canadian, JE)
*	2-120-526-01	TUBE, SPIRAL

The components identified by mark ⚠ or dotted line with mark. ⚠ are critical for safety. Replace only with part number specified.	Les composants identifiés par une marque ⚠ sont critiques pour la sécurité. Ne les remplacer que par une pièce portant le numéro spécifié.

Ref. No.	Part No.	Description	Remark
	3-800-719-01	MANUAL, INSTRUCTION (JAPANESE, ENGLISH, CHINESE)	(848K:JE)
	3-800-719-11	MANUAL, INSTRUCTION (FRENCH, SPANISH)	(848K:Canadian, JE)
	3-800-719-21	MANUAL, INSTRUCTION (ENGLISH)	(848K)
	3-800-933-11	MANUAL, INSTRUCTION (FRENCH, SPANISH)	(844K:AEP, E33, E92)
	3-800-933-21	MANUAL, INSTRUCTION (ENGLISH)	(844K)
	3-800-933-31	MANUAL, INSTRUCTION (DUTCH, SWEDISH, PORTUGUESE)	(844K:AEP)
	3-800-933-41	MANUAL, INSTRUCTION (GERRMAN, ITALIAN)	(844K:AEP)
	3-800-933-51	MANUAL, INSTRUCTION (CHINESE)	(844K:E13)
*	4-916-258-01	TAPE, MAGIC	
	4-961-140-01	LID, BATTERY CASE	(844K)
	4-976-304-01	LID, BATTERY CASE	(848K)
*	4-977-366-01	CUSHION	(848K)
*	4-977-375-01	INDIVIDUAL CARTON	(848K:JE)
*	4-977-376-01	INDIVIDUAL CARTON	(848K:US, Canadian)
*	4-977-456-01	INDIVIDUAL CARTON	(844K:US)
*	4-977-457-01	INDIVIDUAL CARTON	(844K:EXCEPT US, EA)
*	4-977-467-01	CUSHION	(844K:EXCEPT EA)
*	4-977-468-01	CUSHION	(844K:EA)
*	4-977-639-01	INDIVIDUAL CARTON	(844K:EA)
	8-916-813-90	CORD FVV-R2455 SET	
	8-951-812-90	REMOTE COMMANDER RM-DM35 SET	(848K)
	8-953-538-91	HEADPHONE MDR-E741//K1 SET	(844K:AEP)

English
9510583-1
Printed in Japan

Sony Corporation
Consumer A&V Products Company
Personal A&V Products Div.

9-960-330-11

Published by Home A&V Products Div.
Quality Engineering Dept.