D-9/90

SERVICE MANUAL

US Model
Canadian Model
D-9

AEP Model
UK Model
E Model
D-90

Discman

SPECIFICATIONS

CD section

System	Compact disc digital audio system
Laser diode properties	Material: GaAlAs Wavelength: 780 nm Emission duration: Continuous Laser output: Max. 44.6 μW* *This output is the value measured at a distance of about 200 mm from the objective lens surface on the Optical Pick-up Block.
Spindle speed	500 r.p.m. to 200 r.p.m. (CLV)
Scan velocity	1.2-1.4 m/sec.
Error correction	Sony Super Strategy Cross Interleave Reed Solomon Code
D-A conversion	16-bit linear 2 fs disital filter
Frequency response	20-20,000 Hz $^{+1}_{-3}$ dB
Wow and flutter	Below measurable limit*
Outputs (at 9 V input level)	Line output (stereo minijack) Output level 0.7 V rms at 50 kiloohms Load impedance over 10 kiloohms Headphones (stereo minijack) 9 mW + 9 mW at 32 ohms

*Measured by EIAJ CP-307

General

Power requirements	Rechargeable battery pack BP-2 (supplied) Battery case EBP-2 (supplied) and two size AA alkaline batteries (optional) Sony CPM-100P car mount plate, or Sony DCC-120A car battery cord for use on 12 V car battery (optional) DC IN 9 V jack accepts: Sony AC power adaptor (supplied), AC-D6M (optional)
Power consumption	1.8 W DC
Dimensions	Approx. 130.0×31.1×142.0 mm (5 1/8×1 1/4×5 5/8 in.) (w/h/d) not incl. inclined part (depth), projecting parts and controls Approx. 131.0×31.9×142.7 mm (5 1/4×1 5/16×5 5/8 in.) (w/h/d) incl. projecting parts and controls
Weight	Approx. 420 g (15 oz) not incl. rechargeable battery Approx. 500 g (1 lb 1 oz) incl. rechargeable battery
Supplied accessories	AC power adaptor (1) Battery case (1) Rechargeable battery pack (1) Carrying case (1) Connecting cord (1) (stereo miniplug ↔ two phono plugs)

Design and specifications subject to change without notice.

CAUTION

Use of controls or adjustments or performance of procedures other than those specified herein may result in hazardous radiation exposure.

COMPACT DISC COMPACT PLAYER

SONY®

SECTION 1
GENERAL

TABLE OF CONTENTS

LOCATION AND FUNCTION OF CONTROLS

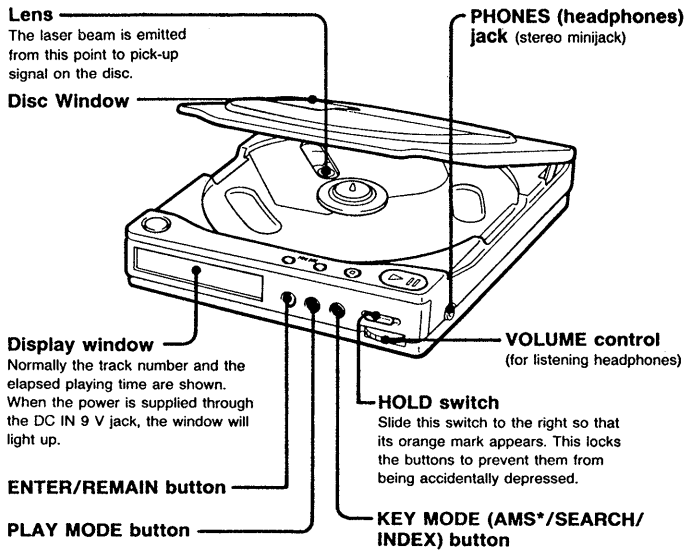

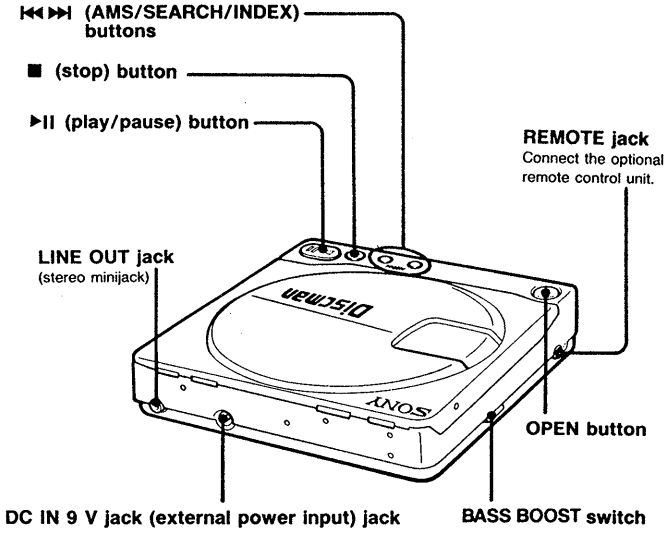

*AMS is the abbreviation of Automatic Music Sensor.

SAFETY-RELATED COMPONENT WARNING!!

COMPONENTS IDENTIFIED BY MARK ⚠ OR DOTTED LINE WITH MARK ⚠ ON THE SCHEMATIC DIAGRAMS AND IN THE PARTS LIST ARE CRITICAL TO SAFE OPERATION. REPLACE THESE COMPONENTS WITH SONY PARTS WHOSE PART NUMBERS APPEAR AS SHOWN IN THIS MANUAL OR IN SUPPLEMENTS PUBLISHED BY SONY.

ATTENTION AU COMPOSANT AYANT RAPPORT À LA SÉCURITÉ!

LES COMPOSANTS IDENTIFIÉS PAR UNE MARQUE ⚠ SUR LES DIAGRAMMES SCHÉMATIQUES ET LA LISTE DES PIÈCES SONT CRITIQUES POUR LA SÉCURITÉ DE FONCTIONNEMENT. NE REMPLACER CES COMPOSANTS QUE PAR DES PIÈCES SONY DONT LES NUMÉROS SONT DONNÉS DANS CE MANUEL OU DANS LES SUPPLÉMENTS PUBLIÉS PAR SONY.

SECTION 2
SERVICING NOTES

NOTES ON HANDLING THE OPTICAL PICK-UP BLOCK OR BASE UNIT

The laser diode in the optical pick-up block may suffer electrostatic breakdown because of the potential difference generated by the charged electrostatic load, etc. on clothing and the human body.
During repair, pay attention to electrostatic breakdown and also use the procedure in the printed matter which is included in the repair parts.
The flexible board is easily damaged and should be handled with care.

Before Replacing the Optical Block

Please be sure to check thoroughly the parameters as par the "Optical Block Checking Procedures" (Part No. : 9-960-027-11) issued separately before replacing the optical block. Note and specifications required to check are given below.

- FOK output : IC501 ⑨ pin
  When checking FOK, remove the lead wire to spindle motor and unsolder and open IC801 ㉔ pin (FOK).
- S carve P-to-P value : 3Vp-p
  When checking S carve P-to-P value, remove the lead wire to spindle motor.
- Adjusted part for focus gain adjustment : RV505
- RF signal P-to-P value : 0.7 – 1.25Vp-p
- Traverse signal P-to-P value : 1.5Vp-p
- The repairing grating holder is impossible.
- Adjusted part for tracking gain adjustment : RV501

Flexible Circuit Board Repairing

- Keep the temperature of the soldering iron around 270℃ during repairing.
- Do not touch the soldering iron on the same conductor of the circuit board (within 3 times).
- Be careful not to apply force on the conductor when soldering or unsoldering.

Notes on chip component replacement

- Never reuse a disconnected chip component.
- Notice that the minus side of a tantalum capacitor may be damaged by heat.

NOTES ON LASER DIODE EMISSION CHECK

The laser beam on this model is concentrated so as to be focused on the disc reflective surface by the objective lens in the UPF. Therefore, when checking the laser diode emission, observe more than 30cm away from the objective lens.

Laser Diode Check Procedure

The laser diode on this set will not emit unless the top panel is closed and S901 is turned on. The laser diode will always emit even if focus search is not performed in service mode.

Procedure 1 (service mode or normal operation)

Check the laser diode emission with the eye.

1. Open top panel.
2. Turn on S901 in Fig. 1.
   (In service mode, this operation is not necessary.)
3. Press the ▶II key.
   (In service mode, this operation is not necessary.)
4. Observe the objective lens and confirm that the laser diode is emitting light. At this time, the laser diode goes on about 10 seconds due to focus serarch.

Procedure 2 (service mode or normal operation)

Check by the current with flows in the laser diode.

1. Close the top panel.
2. Remove the main board and read the current value on the label affixed to the UPF.

(Label on UPF)

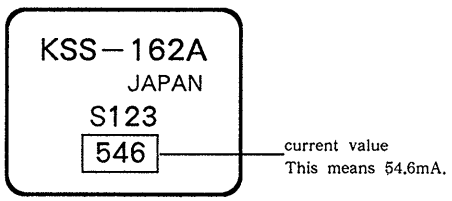

3. Connect a VOM to TP1 and TP2 (both side of R510 : 10 Ω)
4. Press the ▶II key.
5. Calculate the current by the VOM reading.
   VOM reading (V) ÷resistance of R510=current (A)
   ex. VOM reading=0.56V
   0.56÷10=0.056 (A) =56 (mA)
6. Confirm that the ammeter reading is within the range given below.
   value on label$^{+5}_{-11}$ mA (25℃)
   variation relative to temperature : 0.4mA/℃
   (Current increases when temperature rises and decreases when it drops.)

SERVICE MODE (service program)

• Step 1 (Service Mode setting method)

1. Turn the HOLD switch to OFF with the external power supply not plugged in (no power applied to set).
2. Press the ▶II key.
3. Solder jumper TEST terminal.
   (IC801 pin⑨ BAT-E is grounded.)
4. Plug in external power supply.
   This puts the set into service mode.

• Step 2 (Service Mode operation)

1. When service mode is set, the display will change 6 times, and those 6 changes will be repeated over and over.
   Even if LCD dose not display, other operations will be performed.
2. When ▶▶I or I◀◀ key is pressed, the optical pick-up block moves to the inside or outside circumference. Tracking servo and sled servo go off when this is done, so press KEY-MODE to turn on the tracking servo if necessary.
3. When REMAIN is pressed, the display stops. When REMAIN is released, the display continues to change. This allows check of each segment.
4. When ▶II Key is pressed, CLV-S (pull-in mode) starts while performing focus search. When there is no disc installed, focus search is repeated with rotating disc motor.
5. When KEY-MODE is pressed, tracking servo, sled servo and CLV-A (servo during PLAY) go ON.
6. When 4 and 5 are performed, the disc begins to play. At this time, the top panel should be closed and S901 are to be ON. A sound is not produced as muting is ON.
7. All servo (focus, tracking, sled and spindle) go off when ■ key is pressed. Disc motor rotate by inertia for a some time.

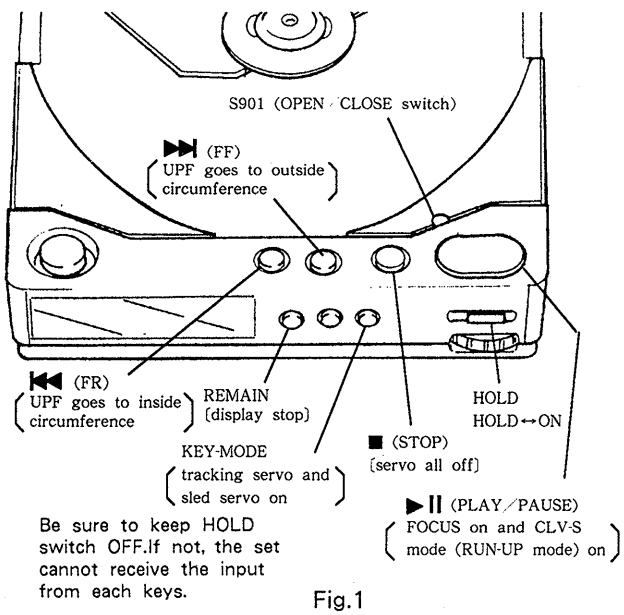

Fig.1

• Step 3 (Service Mode release)

1. First be sure to unplug the external power supply.
2. Then remove the solder jumper TEST terminal.
3. The set will now operated normally.

SECTION 3
ELECTRICAL ADJUSTMENTS

Notes on Adjustment

1. Perform adjustments except for BATTERY REMAINS ADJUSTMENT in service mode.
   Be sure to release service mode after completing adjustment.
   (Refer to "Service Mode (service program)" on page 4.)
2. Perform adjustments in the order given.
3. Use YEDS-18 disc (part No. : 3-702-101-01) only indicated.
4. Power supply voltage : DC 9V
   HOLD switch : OFF
   VOLUME knob : MIN

PREPARATION

Put the set into service mode (See page 4.) and perform the following checks.

• Sled Motor Check

1. Press the OPEN button and open the top panel.
2. Press the ⏭, ⏮ keys and make sure that the optical pick-up block moves smoothly, without catching, from the inmost → outmost → inmost circumference.
   ⏭ : UPF moves outward
   ⏮ : UPF moves inward

• Focus Search Check

1. Press the OPEN button and open the top panel.
2. Press the ▶II key. (Focus search is performed continuously.)
3. Observe the UPF objective lens and check that it moves smoothly up and down with no catching or noises.
4. Press the ■ key.
   Check that focus search operation stops. If it does not, press the ■ key again.

Battery Remains Indication Adjustment

Adjustment procedure :

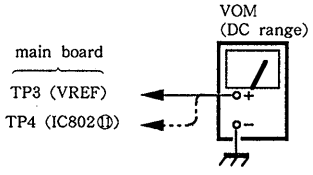

1. Apply DC 3.5V both side of battery terminal.
2. Insert the disc (YEDS-18) and press the ▶II key.
3. Adjust RV801 so that the voltage of TP4 (IC802⑪) is the same as TP3 (V REF).

+6V Adjustment

Adjustment Procedure :

1. Put the set into STOP state service mode (see page4).
2. Connect the VOM to main board test point TP(+6V).
3. Adjust RV401 for 5.1V−5.2V reading on the VOM.
4. After adjustment, release service mode (see page4).

+3.4V Adjustment

Adjustment Procedure :

1. Put the set into STOP state service mode (see page 4).
2. Connect the VOM to main board test point TP (+3.4V).
3. Adjust the pattern connection (Ⓐ or Ⓑ) to obtain 3.4V to 3.6V reading on the VOM.

pattern connection		VOM reading
Ⓐ	Ⓑ	
○	×	down
×	×	↑
×	○	↓
○	○	up

○: short × : open

4. After adjustment, release service mode (see page 4).

+3.6V Adjustment

Adjustment Procedure :

1. Apply DC 3V both side of battery terminal.
2. Connect the VOM to main board test point TP7 (collector of Q437).
3. Insert the dick (YEDS-18) and close the top panel.
4. Press the ▶II key.
5. Adjust RV450 for 3.65V to 3.7V on the VOM reading.

PLL Free Run Frequency Check and Adjustment

Check/Adjustment Procedure :

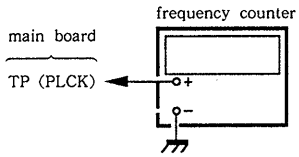

1. Disconnect EFM solder jumper terminal on the main board.
2. Connect a frequency counter to main board test point TP8(IC601⑳).
3. Put the set into service mode (See page 4).
4. Check that the frequency counter reading is 4.35±0.01 MHz. If not, adjust RV504 so that it is 4.35±0.01MHz.
5. After adjustment, release service mode (see page 4).
6. Short the jumper terminal disconnected in step 1.

Focus/Tracking Gain Adjustment

On this set, it is very difficult to simplify this adjustment.
A frequency responce analyzer or CD jig is necessary in order to perform this adjustment exactly.

However, this gain has a margin, so even if it is slightly off, there is no problem. Therefore, do not perfrom this adjustment.

Focus/tracking gain determines the pick-up followup (vertical and horizontal) relative to mechanical noise and mechanical shock when the 2-axis device operate.

- When gain is high, the noise when the 2-axis device operates increases.
- When gain is low, it is more susceptible to mechanical shock and skipping occurs more easily.

However, as these reciprocate, the adjustment is at the point where both are satisfied.
This adjustment is to be performed with using when replacing the following parts :

- UPF (optical pick-up block)
- RV501 (focus gain volume)
- RV502 (tracking gain volume)

CD jig connection :
Remove the solder jumpers at the TE and FE locations and connect the CD jig.
The adjustment procedure is described in the separate CD jig Instruction Manual.

Adjustment Parts Location Diagram
[MAIN BOARD] –SIDE A–

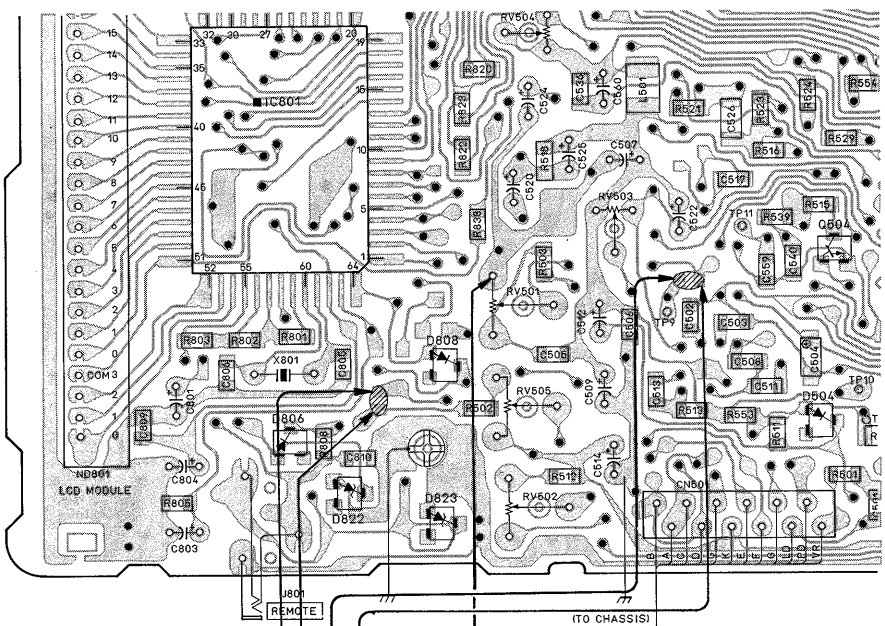

CD jig connection :

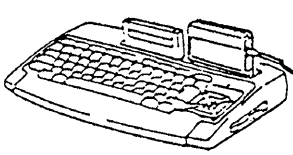

CD jig

BRN
RED
ORG
YEL
WHT

Fig.3

Note on Schematic Diagram :

- All capacitors are in μ F unless otherwise noted. pF : μ μ F 50WV or less are not indicated except for electrolytics and tantalums.
- All resistors are in Ω and ¼W or less unless otherwise specified.
- % : indicates tolerance.
- △ : internal component.

Note:	Note:
The components identified by mark ⚠ or dotted line with mark ⚠ are critical for safety. Replace only with part number specified.	Les composants identifiés par une marque ⚠ sont critiques pour la sécurité. Ne les remplacer que par une pièce portant le numéro spécifié.

- Switch

Ref. No.	Switch	Position
S301	DBB	MAX
S801	■	OFF
S802	▶II	OFF
S804-1	PLAY MODE	OFF
S804-2	KEY MODE	OFF
S804-3	REMAIN	OFF
S806	▶▶I	OFF
S807	I◀◀	OFF
S808	HOLD	OFF
S901	DOOR	ON
S902	LIMIT	OFF

- : B+ Line
- : adjustment for repair.
- Voltages and wavefrorms current are measured with top panel closed
- Power voltage is dc 9V and fed with regulated dc power supply from external power voltage jack.
- Voltage and waveforms are dc with respect to ground in service mode.
  no mark : play
  ( ) : play
- See page 4 for setup of service mode.
- Voltages are taken with a VOM (50kΩ/V). Voltage variations may be noted due to normal production tolerances.
- Waveforms are taken with a oscilloscope.
- Signal path.
  ⇨ : CD

CXA1249M

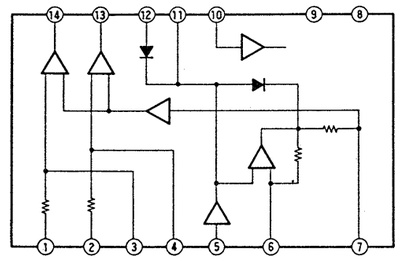

ICFA7616N

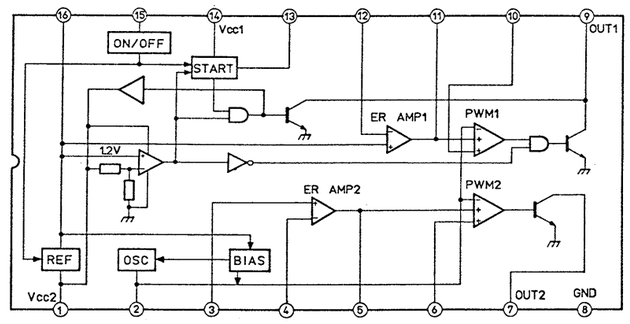

4-6. IC BLOCK DIAGRAMS

IC301
CDX1161M-3

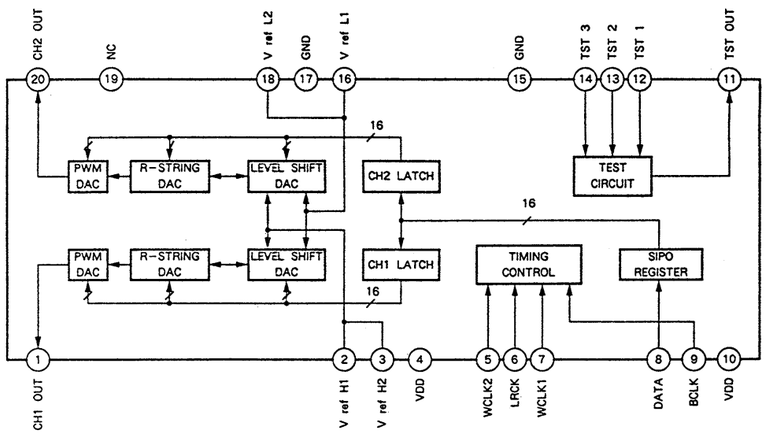

IC302
M51568FP

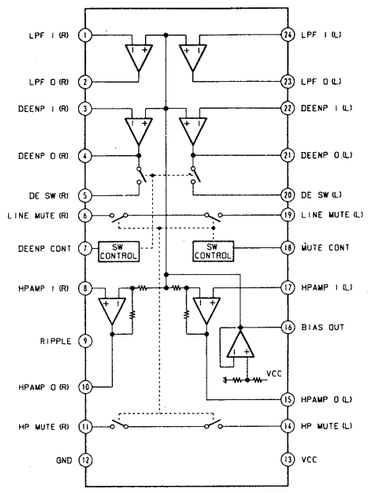

IC501
CXA1271Q

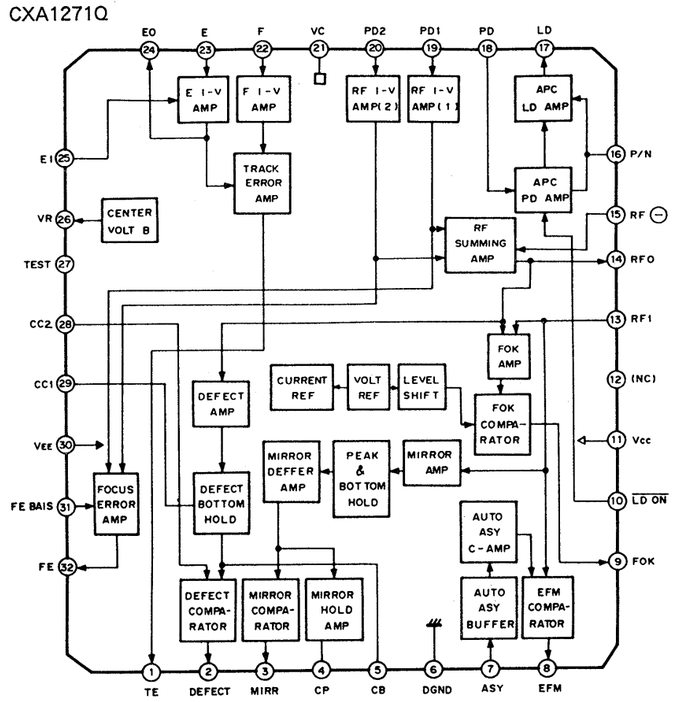

IC502
CXA1272Q

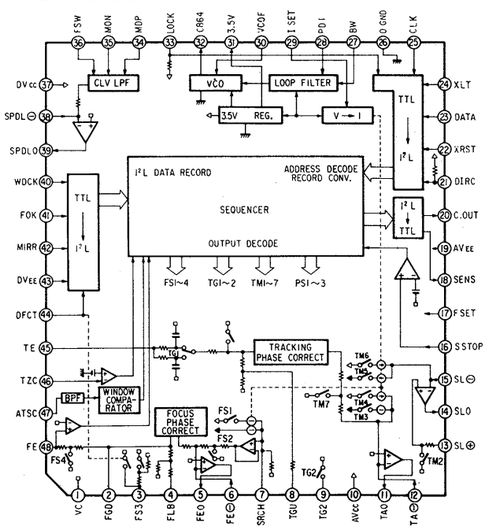

IC504
MPC1715

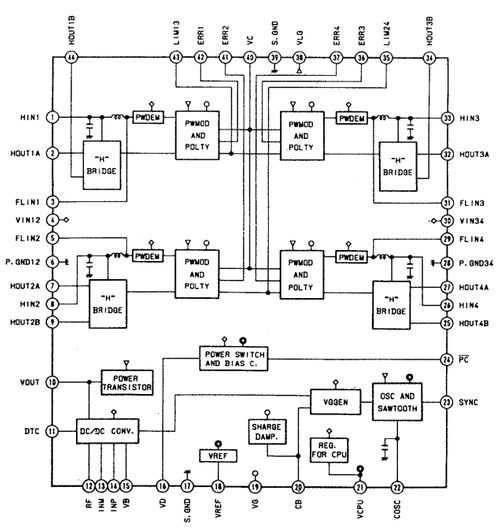

IC601
CDX1135

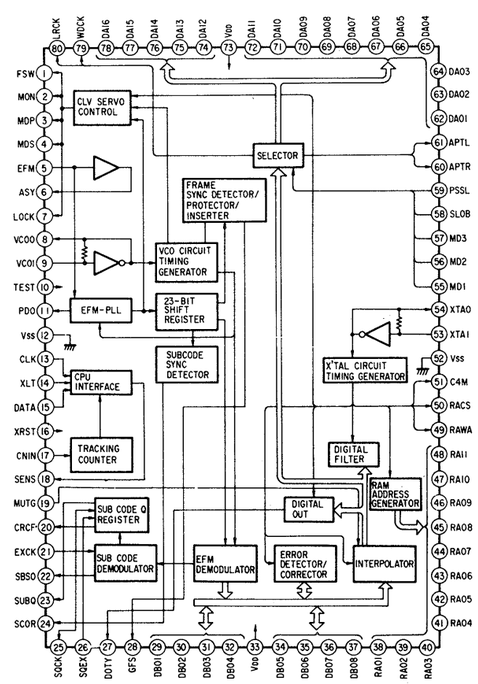

SECTION 5
EXPLODED VIEWS

NOTE:

- The mechanical parts with no reference number in the exploded views are not supplied.
- The construction parts of an assembled part are indicated with a collation number in the remark column.
- Items marked "★" are not stocked since they are seldom required for routine service. Some delay should be anticipated when ordering these items.
- Due to standardization, parts with part number suffix -XX and -X may be different from the parts specified in the components used on the set.
- Color Indication of Appearance Parts Example:
  (RED) . . . KNOB, BALANCE (WHITE)
  ↑ Cabinet's Color ↑ Parts' Color

The components identified by mark ⚠ or dotted line with mark ⚠ are critical for safety.
Replace only with part number specified.

Les composants identifiés par une marque ⚠ sont critiques pour la sécurité.
Ne les remplacer que par une pièce portant le numéro spécifé.

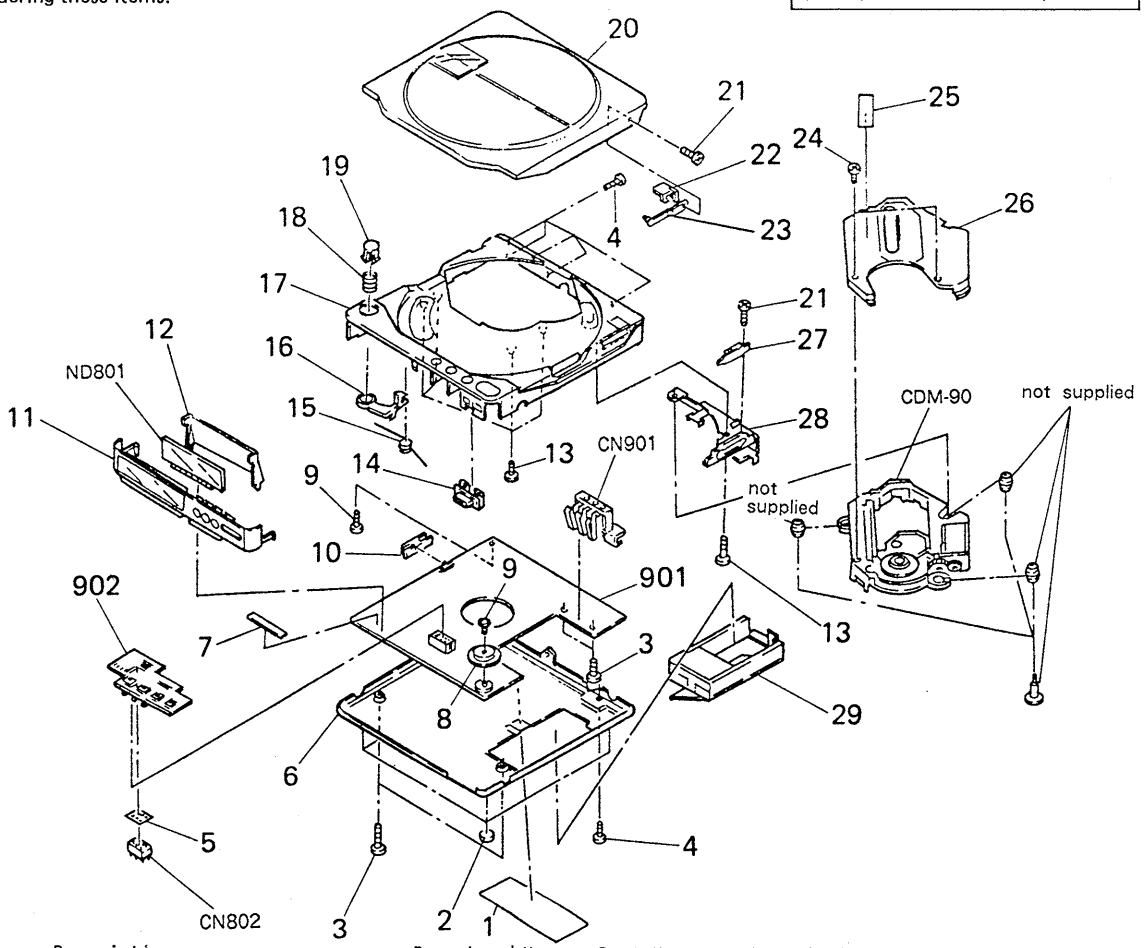

No.	Part No.	Description	Remarks
1	*4-930-148-01	(US,Canadian)...LABEL, MODEL NUMBER (U)	
	*4-930-149-01	(AEP,UK,E).....LABEL, MODEL NUMBER (E)	
2	4-912-641-11	FOOT, RUBBER	
3	4-908-792-61	(GRAY)....SCREW (B2X6), TAPPING, P1	
	4-908-792-71	(BLACK)...SCREW (B2X6), TAPPING, P1	
4	3-703-816-51	(GRAY)....SCREW (M1.4X3.5), SPECIAL HEAD	
	3-703-816-52	(BLACK)...SCREW (M1.4X3.5), SPECIAL HEAD	
5	*4-930-111-01	SPACER (CONNECTOR)	
6	X-4930-104-1	(BLACK)...BOARD ASSY (B), BOTTOM	
	X-4930-109-1	(GRAY)....BOARD ASSY (S), BOTTOM	
7	4-930-160-01	SPACER	
8	4-930-125-01	KNOB (VOLUME)	
9	3-335-797-21	SCREW (M1.4X3), TOOTHED LOCK	
10	4-930-114-01	KNOB (DBB)	
11	X-4930-105-1	(BLACK)...PANEL ASSY (B), FRONT	
	X-4930-110-1	(GRAY)....PANEL ASSY (S), FRONT	
12	4-930-115-01	REFLECTOR	
13	4-924-703-01	SCREW (B1.7X4), TAPPING	
14	4-930-130-01	KNOB (HOLD)	
15	4-930-109-01	SPRING, TORSION	
16	4-930-132-01	CLAW, LOCK, LID	
17	X-4930-113-1	(GRAY)....CABINET ASSY (U-B)	
	X-4930-114-1	(GRAY)....CABINET ASSY (U-S)	
18	4-917-727-01	SPRING, COMPRESSION	
19	4-930-121-11	(GRAY)....BUTTON (OPEN)	
	4-930-121-01	(BLACK)...BUTTON (OPEN)	
20	X-4930-107-1	(BLACK)...PANEL ASSY (B), UPPER	
	X-4930-112-1	(GRAY)....PANEL ASSY, (S) UPPER	
21	3-703-816-01	(GRAY)....SCREW (M1.4X2.0), SPECIAL HEAD	
	3-703-816-02	(BLACK)...SCREW (M1.4X2.0), SPECIAL HEAD	
22	X-4930-102-1	BRACKET ASSY, SWITCHING PLATE	
23	X-4921-216-1	PLATE (B) ASSY, SWITCHING	
24	3-895-823-11	SCREW (B1.4X3), TAPPING	
25	4-908-711-01	LABEL, CAUTION, LENS	
26	4-924-129-01	COVER, MD	
27	*4-917-753-01	SPRING	
28	*4-930-129-01	PLATE (CLICK), FIXED	
29	X-4930-115-1	(GRAY)....BOX ASSY (S), BATTERY	
	X-4930-116-1	(BLACK)...BOX ASSY (B), BATTERY	
901	A-3015-736-A	PC BOARD ASSY, MAIN	
902	*1-629-877-11	PC BOARD, CONTROL	
CDM-90	A-3013-369-A	CDM-90	
CN802	1-564-680-11	PIN, CONNECTOR 10P	
CN901	4-930-131-01	TERMINAL, BATTERY	
ND801	1-808-677-11	MODULE, LCD	

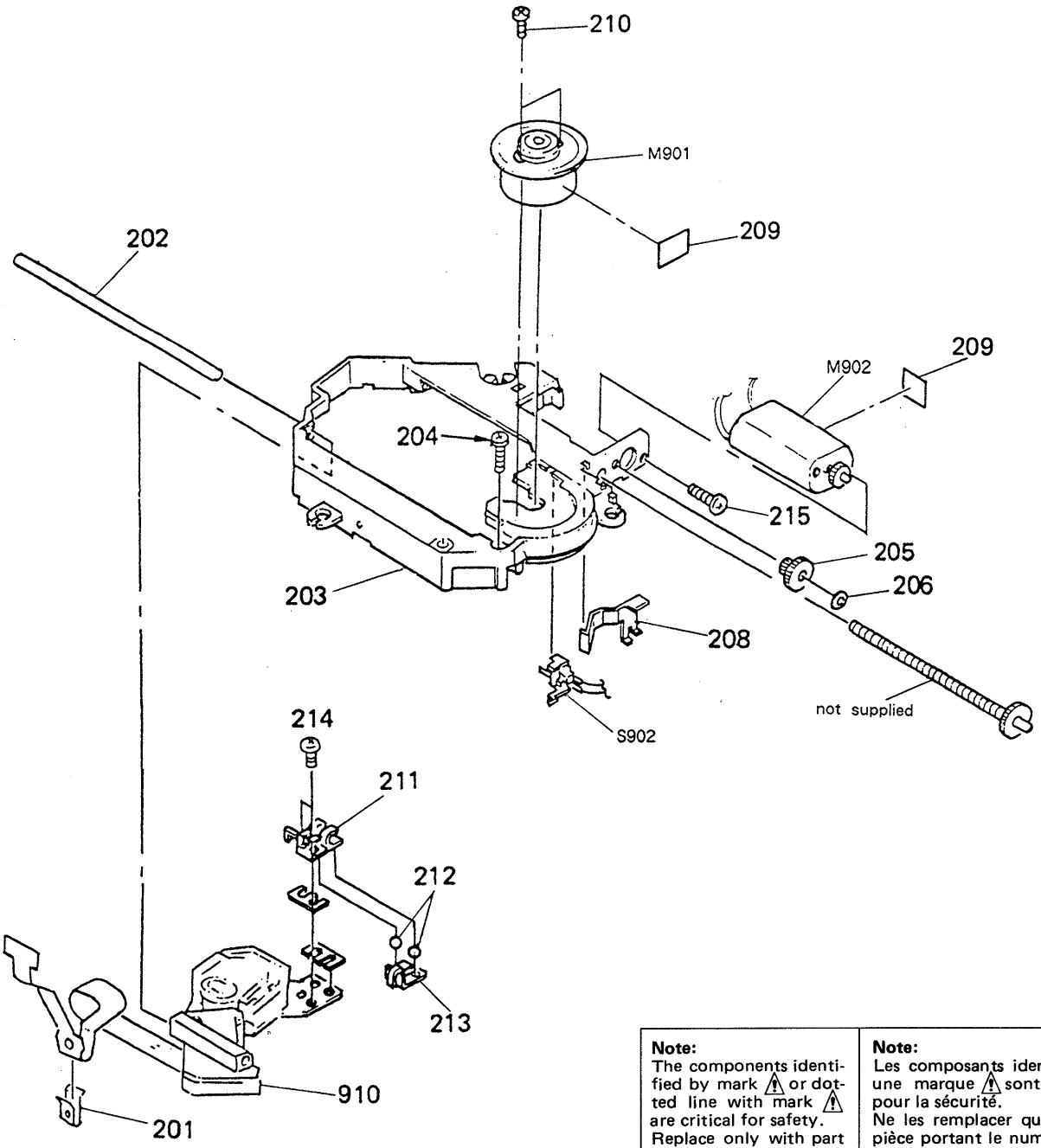

Note:	Note:
The components identified by mark ⚠ or dotted line with mark ⚠ are critical for safety. Replace only with part number specified.	Les composants identifiés par une marque ⚠ sont critiques pour la sécurité. Ne les remplacer que par une pièce portant le numéro spécifié.

No.	Part No.	Description	Remarks
201	4-917-622-01	RETAINER, FLEXIBLE	
202	4-917-611-01	SHAFT (A)	
203	X-4930-108-1	CHASSIS ASSY (SERVICE), MD	
204	4-921-299-01	SCREW (1.7X8), SPECIAL	
205	4-921-292-01	GEAR (B)	
206	3-315-384-11	WASHER, STOPPER	
208	4-921-290-01	SPRING	
209	*2-532-810-00	CUSHION, 15X5X0.3	
210	7-627-552-08	SCREW, PRECISION +P 1.7X2.5	
211	4-921-294-01	RACK (A)	
212	7-671-111-11	STEEL, BOUL 1.5MM	
213	4-921-296-01	SPRING	
214	7-627-552-38	SCREW, PRECISION +P 1.7X3	
215	7-627-553-38	SCREW, PRECISION +P 2X3	
910	⚠8-848-081-21	DEVICE, OPTICAL KSS-162ARP	
M901	A-3133-372-A	MOTOR ASSY, CLV (SPINDLE MOTOR)	
M902	A-3133-334-A	MOTOR SUB ASSY, FEED (SLED MOTOR)	
S902	1-571-099-11	SWITCH (LIMIT)	

SECTION 6
ELECTRICAL PARTS LIST

NOTE:

- Due to standardization, replacements in the parts list may be different from the parts specified in the diagrams or the components used on the set.
- Items marked "★" are not stocked since they are seldom required for routine service. Some delay should be anticipated when ordering these items.
- If there are two or more same circuits in a set such as a stereophonic machine, only typical circuit parts may be indicated and capacitors and resistors in other same circuits may be omitted.

CAPACITORS:
MF: μF, PF: μμF.

RESISTORS
- All resistors are in ohms.
- F: nonflammable

COILS
- MMH: mH, UH: μH

SEMICONDUCTORS
In each case, U: μ, for example:
UA...: μA..., UPA...: μPA...,
UPC...: μPC, UPD...: μPD...

The components identified by mark ⚠ or dotted line with mark ⚠ are critical for safety.
Replace only with part number specified.

Les composants identifiés par une marque ⚠ sont critiques pour la sécurité.
Ne les remplacer que par une pièce portant le numéro spécifié.

Ref.No.	Part No.	Description			
901	A-3015-736-A	PC BOARD ASSY, MAIN			
902	*1-629-877-11	PC BOARD, CONTROL			
910	⚠8-848-081-21	DEVICE, OPTICAL KSS-162ARP			
C102	1-124-257-00	ELECT	2.2MF	20%	35V
C103	1-163-209-00	CERAMIC CHIP	0.0015MF	5%	50V
C104	1-163-209-00	CERAMIC CHIP	0.0015MF	5%	50V
C105	1-163-117-00	CERAMIC CHIP	100PF	5%	50V
C106	1-163-129-00	CERAMIC CHIP	330PF	5%	50V
C107	1-124-257-00	ELECT	2.2MF	20%	35V
C108	1-124-257-00	ELECT	2.2MF	20%	35V
C109	1-124-225-00	ELECT	100MF	20%	6.3V
C110	1-163-141-00	CERAMIC CHIP	0.001MF	5%	50V
C111	1-163-113-00	CERAMIC CHIP	68PF	5%	50V
C112	1-163-021-00	CERAMIC CHIP	0.01MF	10%	50V
C113	1-163-209-00	CERAMIC CHIP	0.0015MF	5%	50V
C114	1-163-086-00	CERAMIC CHIP	3PF	0.25PF	50V
C120	1-126-094-11	ELECT	4.7MF	20%	16V
C121	1-164-161-11	CERAMIC CHIP	0.0022MF	10%	50V
C122	1-135-130-11	TANTAL. CHIP	4.7MF	20%	6.3V
C202	1-124-257-00	ELECT	2.2MF	20%	35V
C203	1-163-209-00	CERAMIC CHIP	0.0015MF	5%	50V
C204	1-163-209-00	CERAMIC CHIP	0.0015MF	5%	50V
C205	1-163-117-00	CERAMIC CHIP	100PF	5%	50V
C206	1-163-129-00	CERAMIC CHIP	330PF	5%	50V
C207	1-135-149-21	TANTAL. CHIP	2.2MF	20%	6.3V
C208	1-124-257-00	ELECT	2.2MF	20%	35V
C209	1-124-225-00	ELECT	100MF	20%	6.3V
C210	1-163-141-00	CERAMIC CHIP	0.001MF	5%	50V
C211	1-163-113-00	CERAMIC CHIP	68PF	5%	50V
C212	1-163-021-00	CERAMIC CHIP	0.01MF	10%	50V
C213	1-163-209-00	CERAMIC CHIP	0.0015MF	5%	50V
C214	1-163-086-00	CERAMIC CHIP	3PF	0.25PF	50V
C220	1-126-198-11	CAP,ELECT	4.7MF	20%	35V
C221	1-164-161-11	CERAMIC CHIP	0.0022MF	10%	50V
C222	1-135-130-11	TANTAL. CHIP	4.7MF	20%	6.3V
C301	1-135-161-21	TANTAL. CHIP	22MF	20%	6.3V
C302	1-135-161-21	TANTAL. CHIP	22MF	20%	6.3V
C303	1-162-638-11	CERAMIC CHIP	1MF		16V
C304	1-126-154-11	ELECT	47MF	20%	6.3V
C305	1-124-431-00	ELECT	33MF	20%	4V
C306	1-126-153-11	ELECT	22MF	20%	6.3V
C307	1-126-153-11	ELECT	22MF	20%	6.3V
C308	1-135-161-21	TANTAL. CHIP	22MF	20%	6.3V
C309	1-164-004-11	CERAMIC CHIP	0.1MF	10%	25V
C310	1-126-196-11	CAP,ELECT	3.3MF	20%	50V
C311	1-164-004-11	CERAMIC CHIP	0.1MF	10%	25V
C312	1-126-157-11	ELECT	10MF	20%	10V
C313	1-126-157-11	ELECT	10MF	20%	10V
C314	1-135-130-11	TANTAL. CHIP	4.7MF	20%	6.3V
C317	1-135-103-00	TANTAL. CHIP	3.3MF	20%	4V
C318	1-135-100-21	TANTAL. CHIP	6.8MF	20%	6.3V
C351	1-126-157-11	ELECT	10MF	20%	10V
C401	1-124-635-00	ELECT	220MF	20%	6.3V
C404	1-124-584-00	ELECT	100MF	20%	10V
C405	1-126-094-11	ELECT	4.7MF	20%	16V
C406	1-126-196-11	CAP,ELECT	3.3MF	20%	50V
C407	1-124-431-00	ELECT	33MF	20%	4V
C408	1-124-434-00	ELECT	220MF	20%	4V
C409	1-135-159-21	TANTAL. CHIP	10MF	20%	16V
C411	1-126-357-11	ELECT	150MF	20%	16V
C412	1-135-103-00	TANTAL. CHIP	3.3MF	20%	4V
C414	1-135-149-21	TANTAL. CHIP	2.2MF	20%	6.3V
C415	1-135-174-11	TANTAL. CHIP	10MF	20%	10V
C416	1-124-257-00	ELECT	2.2MF	20%	35V
C449	1-135-091-00	TANTAL. CHIP	1MF	20%	16V
C450	1-163-081-00	CERAMIC CHIP	0.22MF		25V
C451	1-135-103-00	TANTAL. CHIP	3.3MF	20%	4V
C452	1-163-141-00	CERAMIC CHIP	0.001MF	5%	50V
C453	1-163-021-00	CERAMIC CHIP	0.01MF	10%	50V
C454	1-163-141-00	CERAMIC CHIP	0.001MF	5%	50V
C455	1-164-004-11	CERAMIC CHIP	0.1MF	10%	25V
C456	1-163-038-00	CERAMIC CHIP	0.1MF		25V
C457	1-135-157-21	TANTAL. CHIP	10MF	20%	6.3V
C459	1-135-161-21	TANTAL. CHIP	22MF	20%	6.3V
C460	1-135-100-21	TANTAL. CHIP	6.8MF	20%	6.3V
C461	1-135-100-21	TANTAL. CHIP	6.8MF	20%	6.3V
C462	1-135-100-21	TANTAL. CHIP	6.8MF	20%	6.3V
C463	1-124-257-00	ELECT	2.2MF	20%	35V
C464	1-126-157-11	ELECT	10MF	20%	10V
C465	1-126-157-11	ELECT	10MF	20%	10V
C467	1-124-779-00	CAP,ELECT	10MF	20%	16V
C468	1-135-174-11	TANTAL. CHIP	10MF	20%	10V
C470	1-124-635-00	ELECT	220MF	20%	6.3V
C501	1-163-038-00	CERAMIC CHIP	0.1MF		25V
C502	1-163-989-11	CERAMIC CHIP	0.033MF	10%	25V
C503	1-163-021-00	CERAMIC CHIP	0.01MF	10%	50V
C504	1-135-145-11	TANTAL. CHIP	0.47MF	20%	25V
C505	1-163-127-00	CERAMIC CHIP	270PF	5%	50V
C506	1-163-038-00	CERAMIC CHIP	0.1MF		25V
C507	1-124-431-00	ELECT	33MF	20%	4V

Ref.No.	Part No.	Description			
C508	1-163-038-00	CERAMIC CHIP 0.1MF			25V
C509	1-126-153-11	ELECT 22MF		20%	6.3V
C510	1-163-021-00	CERAMIC CHIP 0.01MF		10%	50V
C511	1-163-095-00	CERAMIC CHIP 12PF		5%	50V
C512	1-124-431-00	ELECT 33MF		20%	4V
C513	1-163-021-00	CERAMIC CHIP 0.01MF		10%	50V
C514	1-124-431-00	ELECT 33MF		20%	4V
C515	1-163-038-00	CERAMIC CHIP 0.1MF			25V
C517	1-163-038-00	CERAMIC CHIP 0.1MF			25V
C518	1-163-037-11	CERAMIC CHIP 0.022MF		10%	25V
C519	1-162-953-11	CERAMIC CHIP 100PF		5%	50V
C520	1-126-094-11	ELECT 4.7MF		20%	16V
C521	1-164-156-11	CERAMIC CHIP 0.1MF			25V
C522	1-126-153-11	ELECT 22MF		20%	6.3V
C523	1-162-953-11	CERAMIC CHIP 100PF		5%	50V
C524	1-126-153-11	ELECT 22MF		20%	6.3V
C525	1-126-094-11	ELECT 4.7MF		20%	16V
C526	1-163-081-00	CERAMIC CHIP 0.22MF			25V
C527	1-162-957-11	CERAMIC CHIP 220PF		5%	50V
C529	1-163-809-11	CERAMIC CHIP 0.047MF		10%	25V
C530	1-163-023-00	CERAMIC CHIP 0.015MF		10%	50V
C531	1-135-162-21	TANTAL. CHIP 33MF		20%	4V
C532	1-163-009-11	CERAMIC CHIP 0.001MF		10%	50V
C533	1-163-989-11	CERAMIC CHIP 0.033MF		10%	25V
C534	1-162-637-11	CERAMIC CHIP 0.47MF			16V
C535	1-163-009-11	CERAMIC CHIP 0.001MF		10%	50V
C536	1-163-038-00	CERAMIC CHIP 0.1MF			25V
C537	1-163-009-11	CERAMIC CHIP 0.001MF		10%	50V
C538	1-162-638-11	CERAMIC CHIP 1MF			16V
C540	1-163-117-00	CERAMIC CHIP 100PF		5%	50V
C541	1-163-038-00	CERAMIC CHIP 0.1MF			25V
C542	1-163-809-11	CERAMIC CHIP 0.047MF		10%	25V
C543	1-163-009-11	CERAMIC CHIP 0.001MF		10%	50V
C545	1-135-166-21	TANTAL. CHIP 47MF		20%	10V
C546	1-135-091-00	TANTAL. CHIP 1MF		20%	16V
C547	1-135-174-11	TANTAL. CHIP 10MF		20%	10V
C548	1-163-081-00	CERAMIC CHIP 0.22MF			25V
C549	1-163-986-00	CERAMIC CHIP 0.027MF		10%	25V
C550	1-162-638-11	CERAMIC CHIP 1MF			16V
C551	1-163-038-00	CERAMIC CHIP 0.1MF			25V
C552	1-163-038-00	CERAMIC CHIP 0.1MF			25V
C553	1-162-638-11	CERAMIC CHIP 1MF			16V
C554	1-162-638-11	CERAMIC CHIP 1MF			16V
C555	1-163-009-11	CERAMIC CHIP 0.001MF		10%	50V
C556	1-163-038-00	CERAMIC CHIP 0.1MF			25V
C557	1-135-174-11	TANTAL. CHIP 10MF		20%	10V
C558	1-135-091-00	TANTAL. CHIP 1MF		20%	16V
C559	1-163-133-00	CERAMIC CHIP 470PF		5%	50V
C560	1-124-635-00	ELECT 220MF		20%	6.3V
C561	1-163-809-11	CERAMIC CHIP 0.047MF			25V
C601	1-162-638-11	CERAMIC CHIP 1MF			16V
C602	1-163-095-00	CERAMIC CHIP 12PF		5%	50V
C603	1-163-095-00	CERAMIC CHIP 12PF		5%	50V
C604	1-163-117-00	CERAMIC CHIP 100PF		5%	50V
C605	1-163-117-00	CERAMIC CHIP 100PF		5%	50V
C606	1-163-117-00	CERAMIC CHIP 100PF		5%	50V
C607	1-163-117-00	CERAMIC CHIP 100PF		5%	50V

Ref.No.	Part No.	Description			
C801	1-126-153-11	ELECT 22MF		20%	6.3V
C802	1-163-038-00	CERAMIC CHIP 0.1MF			25V
C803	1-124-257-00	ELECT 2.2MF		20%	35V
C804	1-124-257-00	ELECT 2.2MF		20%	35V
C805	1-163-113-00	CERAMIC CHIP 68PF		5%	50V
C806	1-163-113-00	CERAMIC CHIP 68PF		5%	50V
C808	1-135-149-21	TANTAL. CHIP 2.2MF			6.3V
C809	1-163-021-00	CERAMIC CHIP 0.01MF		10%	50V
C810	1-163-141-00	CERAMIC CHIP 0.001MF		5%	50V
C811	1-124-779-00	CAP,ELECT 10MF		20%	16V
C812	1-163-038-00	CERAMIC CHIP 0.1MF			25V
C813	1-163-038-00	CERAMIC CHIP 0.1MF			25V
C814	1-124-257-00	ELECT 2.2MF		20%	35V
C815	1-162-637-11	CERAMIC CHIP 0.47MF			16V
CN501	1-566-976-11	SOCKET, CONNECTOR 12P			
CN502	1-565-309-11	CONNECTOR, FLEXIBLE 4P			
CN801	*1-568-434-11	SOCKET, CONNECTOR 10P			
CN802	1-564-680-11	PIN, CONNECTOR 10P			
CDM-90⚠A	-3013-369-A	CDM-90			
CN901	4-930-131-01	TERMINAL, BATTERY			
D354	8-719-938-72	DIODE SB01-05CP			
D355	8-719-105-63	DIODE RD4.3M-B1			
D356	8-719-800-76	DIODE 1SS226			
D357	8-719-100-05	DIODE 1S2837			
D358	8-719-106-70	DIODE RD12M-B1			
D401	8-719-938-78	DIODE SB10-05PCP			
D405	8-719-938-75	DIODE SB05-05CP			
D410	8-719-800-76	DIODE 1SS226			
D411	8-719-100-05	DIODE 1S2837			
D412	8-719-100-05	DIODE 1S2837			
D413	8-719-938-78	DIODE SB10-05PCP			
D415	8-719-100-05	DIODE 1S2837			
D450	8-719-938-78	DIODE SB10-05PCP			
D451	8-719-938-72	DIODE SB01-05CP			
D452	8-719-938-72	DIODE SB01-05CP			
D454	8-719-938-75	DIODE SB05-05CP			
D457	8-719-938-72	DIODE SB01-05CP			
D458	8-719-100-05	DIODE 1S2837			
D459	8-719-100-05	DIODE 1S2837			
D460	8-719-100-05	DIODE 1S2837			
D461	8-719-938-72	DIODE SB01-05CP			
D462	8-719-938-72	DIODE SB01-05CP			
D463	8-719-938-72	DIODE SB01-05CP			
D464	8-719-938-72	DIODE SB01-05CP			
D467	8-719-106-22	DIODE RD7.5M-B1			
D468	8-719-938-75	DIODE SB05-05CP			
D469	8-719-938-72	DIODE SB01-05CP			
D470	8-719-100-05	DIODE 1S2837			
D485	8-719-107-73	DIODE RD4.7M-B2			
D471	8-719-106-70	DIODE RD12M-B1			
D501	8-719-938-72	DIODE SB01-05CP			
D502	8-719-938-72	DIODE SB01-05CP			
D503	8-719-938-72	DIODE SB01-05CP			
D504	8-719-938-72	DIODE SB01-05CP			
D505	8-719-100-05	DIODE 1S2837			
D801	8-719-100-05	DIODE 1S2837			

Note:
The components identified by mark ⚠ or dotted line with mark ⚠ are critical for safety.
Replace only with part number specified.

Note:
Les composants identifiés par une marque ⚠ sont critiques pour la sécurité.
Ne les remplacer que par une pièce portant le numéro spécifié.

Ref.No.	Part No.	Description
D802	8-719-100-05	DIODE 1S2837
D803	8-719-100-05	DIODE 1S2837
D804	8-719-100-05	DIODE 1S2837
D805	8-719-938-72	DIODE SB01-05CP
D806	8-719-938-72	DIODE SB01-05CP
D807	8-719-100-05	DIODE 1S2837
D808	8-719-938-72	DIODE SB01-05CP
D809	8-719-100-05	DIODE 1S2837
D810	8-719-105-90	DIODE RD5.6M-B1
D811	8-719-800-76	DIODE 1SS226
D813	8-719-100-05	DIODE 1S2837
D815	8-719-100-05	DIODE 1S2837
D816	8-719-970-11	DIODE SLM-125YW-C1
D817	8-719-970-11	DIODE SLM-125YW-C1
D818	8-719-970-11	DIODE SLM-125YW-C1
D819	8-719-970-11	DIODE SLM-125YW-C1
D820	8-719-970-11	DIODE SLM-125YW-C1
D821	8-719-970-11	DIODE SLM-125YW-C1
D822	8-719-106-70	DIODE RD12M-B1
D823	8-719-106-70	DIODE RD12M-B1
D824	8-719-100-05	DIODE 1S2837
D825	8-719-100-05	DIODE 1S2837
D826	8-719-100-05	DIODE 1S2837
IC301	8-759-805-43	IC CXD1161M-3
IC302	8-759-630-75	IC M51568FP
IC303	8-759-805-09	IC CXA1249M
IC304	8-759-981-99	IC RC4560M
IC450	8-759-982-61	IC FA7616N
IC452	8-759-209-69	IC TC4S11F
IC453	8-759-209-69	IC TC4S11F
IC454	8-759-230-43	IC TC7S04F
IC455	8-759-230-43	IC TC7S04F
IC501	8-752-033-55	IC CXA1271Q
IC502	8-752-033-54	IC CXA1272Q-Z
IC503	8-759-100-94	IC UPC358G2
IC504	8-759-030-17	IC MPC1715FU
IC505	8-759-230-43	IC TC7S04F
IC601	8-752-329-73	IC CXD1247Q
IC602	8-752-323-64	IC CXK5816M-12L
IC801	8-752-808-85	IC CXP5086-047Q
IC802	8-759-982-61	IC BA10339F
J301	1-562-870-21	JACK (LINE OUT)
J302	1-562-870-11	JACK (PHONES)
J401	1-562-961-11	JACK (DC IN)
J801	1-568-257-11	JACK (REMOTE)
JR101	1-216-296-00	METAL GLAZE 0 5% 1/8W
JR102	1-216-295-00	METAL GLAZE 0 5% 1/10W
JR103	1-216-295-00	METAL GLAZE 0 5% 1/10W
JR201	1-216-295-00	METAL GLAZE 0 5% 1/10W
JR202	1-216-295-00	METAL GLAZE 0 5% 1/10W
JR203	1-216-295-00	METAL GLAZE 0 5% 1/10W
JR301	1-216-295-00	METAL GLAZE 0 5% 1/10W
JR401	1-216-295-00	METAL GLAZE 0 5% 1/10W
L402	1-412-039-51	INDUCTOR CHIP 100UH
L403	1-412-031-11	INDUCTOR CHIP 47UH
L450	1-459-961-11	COIL (WITH CORE)
L452	1-412-029-11	INDUCTOR CHIP 10UH

Ref.No.	Part No.	Description
L457	1-412-029-11	INDUCTOR CHIP 10UH
L501	1-412-029-11	INDUCTOR CHIP 10UH
L502	1-412-039-51	INDUCTOR CHIP 100UH
L503	1-412-039-51	INDUCTOR CHIP 100UH
L504	1-412-039-51	INDUCTOR CHIP 100UH
L505	1-412-039-51	INDUCTOR CHIP 100UH
M901	A-3133-372-A	MOTOR ASSY, CLV (SPINDLE MOTOR)
M902	A-3133-334-A	MOTOR SUB ASSY, FEED (SLED MOTOR)
ND801	1-808-677-11	MODULE, LCD
Q101	8-729-159-64	TRANSISTOR 2SD596-DV4
Q102	8-729-903-30	TRANSISTOR DTC114TK
Q201	8-729-159-64	TRANSISTOR 2SD596-DV4
Q202	8-729-903-30	TRANSISTOR DTC114TK
Q301	8-729-159-64	TRANSISTOR 2SD596-DV4
Q304	8-729-271-23	TRANSISTOR 2SC2712L
Q305	8-729-159-64	TRANSISTOR 2SD596-DV4
Q352	8-729-159-64	TRANSISTOR 2SD596-DV4
Q405	8-729-100-75	TRANSISTOR 2SA812-M5
Q406	8-729-159-64	TRANSISTOR 2SD596-DV4
Q407	8-729-162-44	TRANSISTOR 2SB624-BV4
Q408	8-729-903-10	TRANSISTOR FMW1
Q409	8-729-922-27	TRANSISTOR 2SD1758F5R
Q415	8-729-901-03	TRANSISTOR DTC144WK
Q416	8-729-901-00	TRANSISTOR DTC124EK
Q417	8-729-921-85	TRANSISTOR 2SB1182F5-R
Q418	8-729-903-10	TRANSISTOR FMW1
Q420	8-729-901-00	TRANSISTOR DTC124EK
Q422	8-729-901-00	TRANSISTOR DTC124EK
Q426	8-729-901-05	TRANSISTOR DTA124EK
Q427	8-729-100-75	TRANSISTOR 2SA812-M5
Q428	8-729-902-96	TRANSISTOR FMS1
Q429	8-729-903-10	TRANSISTOR FMW1
Q430	8-729-116-60	TRANSISTOR 2SK160
Q431	8-729-101-07	TRANSISTOR 2SB798-DLDK
Q437	8-729-806-75	TRANSISTOR 2SB1120
Q438	8-729-806-75	TRANSISTOR 2SB1120
Q450	8-729-162-45	TRANSISTOR 2SB624-BV5
Q451	8-729-901-05	TRANSISTOR DTA124EK
Q452	8-729-140-75	TRANSISTOR 2SD999
Q453	8-729-806-75	TRANSISTOR 2SB1120
Q454	8-729-159-64	TRANSISTOR 2SD596-DV4
Q455	8-729-806-75	TRANSISTOR 2SB1120
Q456	8-729-800-37	TRANSISTOR 2SD1048X7
Q457	8-729-800-37	TRANSISTOR 2SD1048X7
Q461	8-729-162-44	TRANSISTOR 2SB624-BV4
Q462	8-729-901-00	TRANSISTOR DTC124EK
Q463	8-729-800-37	TRANSISTOR 2SD1048X8
Q464	8-729-162-44	TRANSISTOR 2SB624-BV5
Q466	8-729-901-00	TRANSISTOR DTC124EK
Q465	8-729-901-05	TRANSISTOR DTA124EK
Q501	8-729-402-90	TRANSISTOR XN4609
Q502	8-729-162-44	TRANSISTOR 2SB624-BV4
Q503	8-729-103-16	TRANSISTOR 2SC1622A
Q504	8-729-103-16	TRANSISTOR 2SC1622A
Q505	8-729-805-43	TRANSISTOR 2SC3396
Q801	8-729-901-00	TRANSISTOR DTC124EK
Q803	8-729-901-00	TRANSISTOR DTC124EK
Q804	8-729-901-05	TRANSISTOR DTA124EK

Ref.No.	Part No.	Description			
Q805	8-729-159-64	TRANSISTOR 2SD596-DV4			
Q806	8-729-901-05	TRANSISTOR DTA124EK			
Q807	8-729-907-39	TRANSISTOR IMD2			
Q808	8-729-903-29	TRANSISTOR DTA144TK			
Q809	8-729-901-05	TRANSISTOR DTA124EK			
Q810	8-729-901-00	TRANSISTOR DTC124EK			
Q811	8-729-901-00	TRANSISTOR DTC124EK			
R101	1-216-661-11	METAL CHIP	2.7K	0.50%	1/10W
R102	1-216-683-11	METAL CHIP	22K	0.50%	1/10W
R103	1-216-071-00	METAL GLAZE	8.2K	5%	1/10W
R104	1-216-683-11	METAL CHIP	22K	0.50%	1/10W
R105	1-216-694-11	METAL CHIP	62K	0.50%	1/10W
R106	1-216-699-11	METAL CHIP	100K	0.50%	1/10W
R107	1-216-748-11	METAL GLAZE	39K	5%	1/10W
R108	1-216-053-00	METAL GLAZE	1.5K	5%	1/10W
R109	1-216-073-00	METAL GLAZE	10K	5%	1/10W
R110	1-216-009-00	METAL GLAZE	22	5%	1/10W
R111	1-216-073-00	METAL GLAZE	10K	5%	1/10W
R112	1-216-033-00	METAL GLAZE	220	5%	1/10W
R113	1-216-053-00	METAL GLAZE	1.5K	5%	1/10W
R114	1-216-097-00	METAL GLAZE	100K	5%	1/10W
R116	1-216-065-00	METAL GLAZE	4.7K	5%	1/10W
R117	1-216-073-00	METAL GLAZE	10K	5%	1/10W
R120	1-216-065-00	METAL GLAZE	4.7K	5%	1/10W
R122	1-216-097-00	METAL GLAZE	100K	5%	1/10W
R123	1-216-073-00	METAL GLAZE	10K	5%	1/10W
R201	1-216-661-11	METAL CHIP	2.7K	0.50%	1/10W
R202	1-216-683-11	METAL CHIP	22K	0.50%	1/10W
R203	1-216-071-00	METAL GLAZE	8.2K	5%	1/10W
R204	1-216-683-11	METAL CHIP	22K	0.50%	1/10W
R205	1-216-694-11	METAL CHIP	62K	0.50%	1/10W
R206	1-216-699-11	METAL CHIP	100K	0.50%	1/10W
R207	1-216-748-11	METAL GLAZE	39K	5%	1/10W
R208	1-216-053-00	METAL GLAZE	1.5K	5%	1/10W
R209	1-216-073-00	METAL GLAZE	10K	5%	1/10W
R210	1-216-009-00	METAL GLAZE	22	5%	1/10W
R211	1-216-073-00	METAL GLAZE	10K	5%	1/10W
R212	1-216-033-00	METAL GLAZE	220	5%	1/10W
R213	1-216-053-00	METAL GLAZE	1.5K	5%	1/10W
R214	1-216-097-00	METAL GLAZE	100K	5%	1/10W
R216	1-216-065-00	METAL GLAZE	4.7K	5%	1/10W
R217	1-216-073-00	METAL GLAZE	10K	5%	1/10W
R220	1-216-065-00	METAL GLAZE	4.7K	5%	1/10W
R222	1-216-097-00	METAL GLAZE	100K	5%	1/10W
R223	1-216-073-00	METAL GLAZE	10K	5%	1/10W
R303	1-216-057-00	METAL GLAZE	2.2K	5%	1/10W
R304	1-216-062-00	METAL GLAZE	3.6K	5%	1/10W
R305	1-216-298-00	METAL GLAZE	2.2	5%	1/10W
R306	1-216-121-00	METAL GLAZE	1M	5%	1/10W
R307	1-216-113-00	METAL GLAZE	470K	5%	1/10W
R309	1-216-057-00	METAL GLAZE	2.2K	5%	1/10W
R310	1-216-067-00	METAL GLAZE	5.6K	5%	1/10W
R319	1-216-121-00	METAL GLAZE	1M	5%	1/10W
R349	1-216-057-00	METAL GLAZE	2.2K	5%	1/10W
R354	1-216-073-00	METAL GLAZE	10K	5%	1/10W
R355	1-216-069-00	METAL GLAZE	6.8K	5%	1/10W
R404	1-216-097-00	METAL GLAZE	100K	5%	1/10W
R405	1-216-073-00	METAL GLAZE	10K	5%	1/10W

Ref.No.	Part No.	Description			
R407	1-216-049-00	METAL GLAZE	1K	5%	1/10W
R408	1-216-045-00	METAL GLAZE	680	5%	1/10W
R409	1-216-041-00	METAL GLAZE	470	5%	1/10W
R410	1-216-045-00	METAL GLAZE	680	5%	1/10W
R411	1-216-049-00	METAL GLAZE	1K	5%	1/10W
R412	1-216-092-00	METAL GLAZE	62K	5%	1/10W
R413	1-216-067-00	METAL GLAZE	5.6K	5%	1/10W
R414	1-216-081-00	METAL GLAZE	22K	5%	1/10W
R415	1-216-049-00	METAL GLAZE	1K	5%	1/10W
R416	1-216-033-00	METAL GLAZE	220	5%	1/10W
R417	1-216-658-11	METAL CHIP	2K	0.50%	1/10W
R418	1-216-664-11	METAL CHIP	3.6K	0.50%	1/10W
R419	1-216-663-11	METAL CHIP	3.3K	0.50%	1/10W
R420	1-216-697-11	METAL CHIP	82K	0.50%	1/10W
R421	1-216-033-00	METAL GLAZE	220	5%	1/10W
R427	1-217-806-11	METAL GLAZE	1	5%	1/8W
R428	1-217-806-11	METAL GLAZE	1	5%	1/8W
R437	1-216-081-00	METAL GLAZE	22K	5%	1/10W
R438	1-216-041-00	METAL GLAZE	470	5%	1/10W
R439	1-216-049-00	METAL GLAZE	1K	5%	1/10W
R440	1-216-081-00	METAL GLAZE	22K	5%	1/10W
R441	1-216-049-00	METAL GLAZE	1K	5%	1/10W
R442	1-216-017-00	METAL GLAZE	47	5%	1/10W
R443	1-216-041-00	METAL GLAZE	470	5%	1/10W
R444	1-216-675-11	METAL CHIP	10K	0.50%	1/10W
R445	1-216-057-00	METAL GLAZE	2.2K	5%	1/10W
R446	1-216-057-00	METAL GLAZE	2.2K	5%	1/10W
R447	1-216-809-11	METAL GLAZE	100	5%	1/16W
R448	1-216-121-00	METAL GLAZE	1M	5%	1/10W
R449	1-216-081-00	METAL GLAZE	22K	5%	1/10W
R450	1-216-105-00	METAL GLAZE	220K	5%	1/10W
R451	1-216-103-00	METAL GLAZE	180K	5%	1/10W
R452	1-216-073-00	METAL GLAZE	10K	5%	1/10W
R453	1-216-057-00	METAL GLAZE	2.2K	5%	1/10W
R454	1-216-071-00	METAL GLAZE	8.2K	5%	1/10W
R455	1-216-051-00	METAL GLAZE	1.2K	5%	1/10W
R456	1-216-097-00	METAL GLAZE	100K	5%	1/10W
R457	1-216-073-00	METAL GLAZE	10K	5%	1/10W
R458	1-216-017-00	METAL GLAZE	47	5%	1/10W
R459	1-216-085-00	METAL GLAZE	33K	5%	1/10W
R460	1-216-077-00	METAL GLAZE	15K	5%	1/10W
R461	1-216-045-00	METAL GLAZE	680	5%	1/10W
R462	1-216-049-00	METAL GLAZE	1K	5%	1/10W
R463	1-216-097-00	METAL GLAZE	100K	5%	1/10W
R464	1-216-097-00	METAL GLAZE	100K	5%	1/10W
R465	1-216-109-00	METAL GLAZE	330K	5%	1/10W
R466	1-216-097-00	METAL GLAZE	100K	5%	1/10W
R468	1-216-057-00	METAL GLAZE	2.2K	5%	1/10W
R471	1-216-049-00	METAL GLAZE	1K	5%	1/10W
R473	1-216-097-00	METAL GLAZE	100K	5%	1/10W
R474	1-216-097-00	METAL GLAZE	100K	5%	1/10W
R475	1-216-033-00	METAL GLAZE	220	5%	1/10W
R501	1-216-024-00	METAL GLAZE	91	5%	1/10W
R502	1-216-079-00	METAL GLAZE	18K	5%	1/10W
R503	1-216-075-00	METAL GLAZE	12K	5%	1/10W
R504	1-216-073-00	METAL GLAZE	10K	5%	1/10W
R505	1-216-104-00	METAL GLAZE	200K	5%	1/10W

Ref.No.	Part No.	Description
S301	1-571-506-41	SWITCH, SLIDE (DBB)
S801	1-554-371-51	SWITCH, TACT (■)
S802	1-554-371-51	SWITCH, TACT (1 KEY) (▶II)
S804	1-571-484-11	SWITCH, KEY BOARD (REMAIN,PLAY,KEY)
S806	1-554-371-51	SWITCH, TACT (▶▶I)
S807	1-554-371-51	SWITCH, TACT (I◀◀)
S808	1-571-860-11	SWITCH, SLIDE (HOLD)
S901	1-570-953-11	SWITCH, PUSH (1 KEY) (DOOR)
S902	1-571-099-11	SWITCH (LIMIT)
X601	1-567-737-11	VIBRATOR, CRYSTAL (16.9344MHz)
X801	1-567-094-00	VIBRATOR, CERAMIC (3.58MHz)

ACCESSORY & PACKING MATERIAL

⚠1-463-691-11	(US).....ADAPTOR, AC (AC-930A)
⚠1-463-694-11	(Canadian)...ADAPTOR, AC (AC-930A)
⚠1-463-700-11	(UK).....ADAPTOR, AC (AC-930A)
⚠1-463-702-11	(E).....ADAPTOR, AC (AC-950W)
⚠1-463-705-11	(AEP).....ADAPTOR, AC (AC-930AEP)
⚠1-463-968-11	(US).....ADAPTOR, AC (AC-940)
⚠1-526-565-00	(E).....AC PLUG ADAPTOR
1-528-255-21	BATTERY PAC (BP-2)
1-555-658-21	CORD, CONNECTION
3-750-077-11	(Canadian,AEP,UK,E)..MANUAL, INSTRUCTION
3-750-077-21	(US).....MANUAL, INSTRUCTION
3-750-077-41	(AEP).....MANUAL, INSTRUCTION
*4-920-407-01	BAG, PROTECTION
*4-930-139-01	CUSHION (UPPER)
*4-930-140-01	(US,Canadian,E)...CUSHION (LOWER)
*4-930-162-01	(AEP,UK).....CUSHION (LOWER)
*4-930-144-01	(US).....INDIVIDUAL CARTON
*4-930-167-01	(Canadian)...INDIVIDUAL CARTON
*4-930-163-01	(AEP).....INDIVIDUAL CARTON
*4-930-165-01	(UK,FR).....INDIVIDUAL CARTON
*4-930-168-01	(E).....INDIVIDUAL CARTON
4-930-155-01	CARRYING CASE
8-952-266-89	HEADPHONE MDR-A10L/A SET
X-4930-117-1	CASE ASSY, BATTERY

Note: The components identified by mark ⚠ or dotted line with mark ⚠ are critical for safety. Replace only with part number specified.	**Note:** Les composants identifiés par une marque ⚠ sont critiques pour la sécurité. Ne les remplacer que par une pièce portant le numéro spécifié.