D-66

SERVICE MANUAL

US Model
Canadian Model
AEP Model
UK Model
E Model
Australian Model

Discman

Model Name Using Similar Mechanism	New
CD Mechanism Type	CDM-66

SPECIFICATIONS

CD section

System	Compact disc digital audio system
Laser diode properties	Material: GaAlAs Wavelength: 780 nm Emission duration: Continuous Laser output: Max. 44.6 μW* * This output is the value measured at a distance of 200 mm from the objective lens surface on the Optical Pick-up Block.
Spindle speed	500 r.p.m. to 200 r.p.m. (CLV)
Scan velocity	1.2 – 1.4 m/sec.
Error correction	Sony Super Strategy Cross Interleave Reed Solomon Code
D-A conversion	16-bit linear 8 fs digital filter
Frequency response	20 – 20,000 Hz $^{+1}_{-3}$dB
Wow and flutter	Below measurable limit**
Outputs (at 6 V input level)	
	Line output (stereo minijack) Output level 0.6 V rms at 50 kilohms Load impedance over 10 kilohms
	Headphones (stereo minijack) 9 mW + 9 mW at 16 ohms

** Measured by EIAJ CP-307

General

Power requirements	Rechargeable battery pack BP-2EX (supplied) Battery case EBP-2 (supplied) and two size AA (LR6) alkaline batteries (not supplied) DC IN 6 V jack accepts: Sony AC power adaptor (supplied) for use on 120 V AC, 60 Hz Sony CPM-200P mount plate for use on 12 V car battery (not supplied)
Power consumption	1.4 W DC
Dimensions	Approx. 128 × 30.2 × 145 mm (5 1/8 × 1 1/4 × 5 3/4 in.) (w/h/d) not incl. Inclined part (depth), projecting parts and controls Approx. 130 × 31.5 × 146 mm (5 1/8 × 1 1/4 × 5 3/4 in.) (w/h/d) incl. projecting parts and controls
Weight	Approx. 310 g (11 oz) not incl. rechargeable battery Approx. 395 g (14 oz) incl. rechargeable battery
Supplied accessories	AC power adaptor (1) Rechargeable battery pack (1) Hand strap (1) Connecting cord (1) (stereo miniplug ↔ two phono plugs) Battery case (1) Headphones (1)

Design and specifications subject to change without notice.

For the Customers in the United Kingdom and European Countries

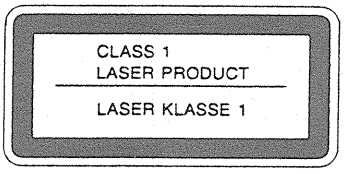

This Compact Disc player is classified as a CLASS 1 LASER product.
The CLASS 1 LASER PRODUCT label is located on the bottom exterior.

CAUTION
Use of controls or adjustments or performance of procedures other than those specified herein may result in hazardous radiation exposure.

COMPACT DISC COMPACT PLAYER

SONY®

TABLE OF CONTENTS

SECTION 1
GENERAL

Location and Function of Controls

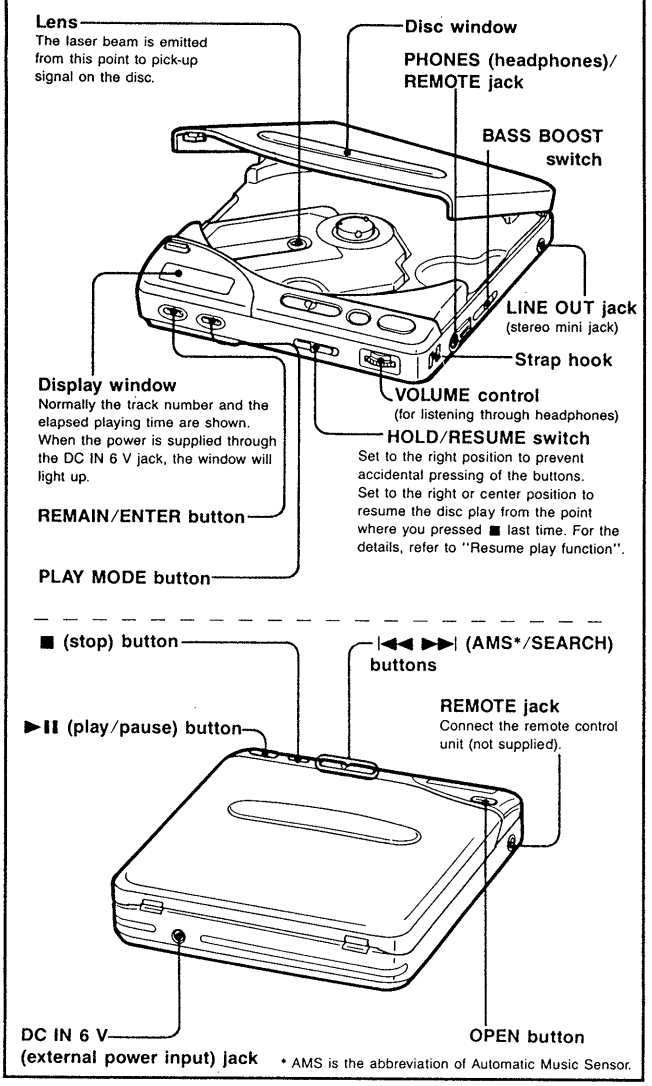

SAFETY-RELATED COMPONENT WARNING!!

COMPONENTS IDENTIFIED BY MARK ⚠ OR DOTTED LINE WITH MARK ⚠ ON THE SCHEMATIC DIAGRAMS AND IN THE PARTS LIST ARE CRITICAL TO SAFE OPERATION. REPLACE THESE COMPONENTS WITH SONY PARTS WHOSE PART NUMBERS APPEAR AS SHOWN IN THIS MANUAL OR IN SUPPLEMENTS PUBLISHED BY SONY.

ATTENTION AU COMPOSANT AYANT RAPPORT À LA SÉCURITÉ!

LES COMPOSANTS IDENTIFIÉS PAR UNE MARQUE ⚠ SUR LES DIAGRAMMES SCHÉMATIQUES ET LA LISTE DES PIÈCES SONT CRITIQUES POUR LA SÉCURITÉ DE FONCTIONNEMENT. NE REMPLACER CES COMPOSANTS QUE PAR DES PIÈCES SONY DONT LES NUMÉROS SONT DONNÉS DANS CE MANUEL OU DANS LES SUPPLÉMENTS PUBLIÉS PAR SONY.

SECTION 2
SERVICING NOTES

NOTES ON HANDLING THE OPTICAL PICK-UP BLOCK OR BASE UNIT

The laser diode in the optical pick-up block may suffer electrostatic breakdown because of the potential difference generated by the charged electrostatic load, etc. on clothing and the human body.
During repair, pay attention to electrostatic breakdown and also use the procedure in the printed matter which is included in the repair parts.
The flexible board is easily damaged and should be handled with care.

Before Replacing the Optical Block

Please be sure to check thoroughly the parameters as par the "Optical Block Checking Procedures" (Part No. : 9-960-027-11) issued separately before replacing the optical block. Note and specifications required to check are given below.

- FOK output : IC501 ⑨ pin
  When checking FOK, remove the lead wire to spindle motor and unsolder and open IC801 ㉔ pin (FOK).
- S carve P-to-P value : 2.5Vp-p
  When checking S carve P-to-P value, remove the lead wire to spindle motor.
- Adjusted part for focus gain adjustment : RV505
- RF signal P-to-P value : 0.8 – 1.35Vp-p
- Traverse signal P-to-P value : 1.8Vp-p
- The repairing grating holder is impossible.
- Adjusted part for tracking gain adjustment : RV501

Flexible Circuit Board Repairing

- Keep the temperature of the soldering iron around 270℃ during repairing.
- Do not touch the soldering iron on the same conductor of the circuit board (within 3 times).
- Be careful not to apply force on the conductor when soldering or unsoldering.

Notes on chip component replacement

- Never reuse a disconnected chip component.
- Notice that the minus side of a tantalum capacitor may be damaged by heat.

NOTES ON LASER DIODE EMISSION CHECK

The laser beam on this model is concentrated so as to be focused on the disc reflective surface by the objective lens in the Optical pick-up block. Therefore, when checking the laser diode emission, observe more than 30cm away from the objective lens.

Laser Diode Check Procedure

The laser diode on this set will not emit unless the top panel is closed and S901 is turned on. The laser diode will always emit even if focus search is not performed in service mode.

Procedure 1 (service mode or normal operation)

Check the laser diode emission with the eye.

1. Open top panel.
2. Turn on S901 in Fig. 1.
   (In service mode, this operation is not necessary.)
3. Press the ▶II key.
   (In service mode, this operation is not necessary.)
4. Observe the objective lens and confirm that the laser diode is emitting light. At this time, the laser diode goes on about 10 seconds due to focus serarch.

Procedure 2 (service mode or normal operation)

Check by the current with flows in the laser diode.

1. Close the top panel.
2. Remove the main board and read the current value on the label affixed to the Optical pick-up block.

(Label attached to the flexible circuit board of the optical pick up.)

3 6 □ 0 0 3 0 4

This figure shows the machine number of the optical pick up.

This figure shows the electric current value. In this case, it shows 36mA.

The electric current values differs depending on the model.

3. Connect a VOM to TP1 and TP2 (both side of R510 : 10 Ω)
4. Press the ▶II key.
5. Calculate the current by the VOM reading.
   VOM reading (V) ÷resistance of R510=current (A)
   ex. VOM reading=0.37V
   0.37÷10=0.037 (A) =37 (mA)
6. Confirm that the ammeter reading is within the range given below.
   value on label$^{+5}_{-11}$ mA (25℃)
   variation relative to temperature : 0.4mA/℃
   (Current increases when temperature rises and decreases when it drops.)

SERVICE MODE (service program)

• Step 1 (Service Mode setting method)

1. Turn the HOLD switch to OFF with the external power supply not plugged in (no power applied to set).
2. Press the ▶II key.
3. Solder jumper TEST terminal.
   (IC801 pin⑨ BAT-E is grounded.)
4. Plug in external power supply.
   This puts the set into service mode.

• Step 2 (Service Mode operation)

1. When service mode is set, the display will change 6 times, and those 6 changes will be repeated over and over.
   Even if LCD dose not display, other operations will be performed.
2. When ▶▶I or I◀◀ key is pressed, the optical pick-up block moves to the inside or outside circumference. Tracking servo and sled servo go off when this is done, so press KEY-MODE to turn on the tracking servo if necessary.
3. When REMAIN is pressed, the display stops. When REMAIN is released, the display continues to change. This allows check of each segment.
4. When ▶II Key is pressed, CLV-S (pull-in mode) starts while performing focus search. When there is no disc installed, focus search is repeated with rotating disc motor.
5. When KEY-MODE is pressed, tracking servo, sled servo and CLV-A (servo during PLAY) go ON.
6. When 4 and 5 are performed, the disc begins to play. At this time, the top panel should be closed and S901 are to be ON. A sound is not produced as muting is ON.
7. All servo (focus, tracking, sled and spindle) go off when ■ key is pressed. Disc motor rotate by inertia for a some time.

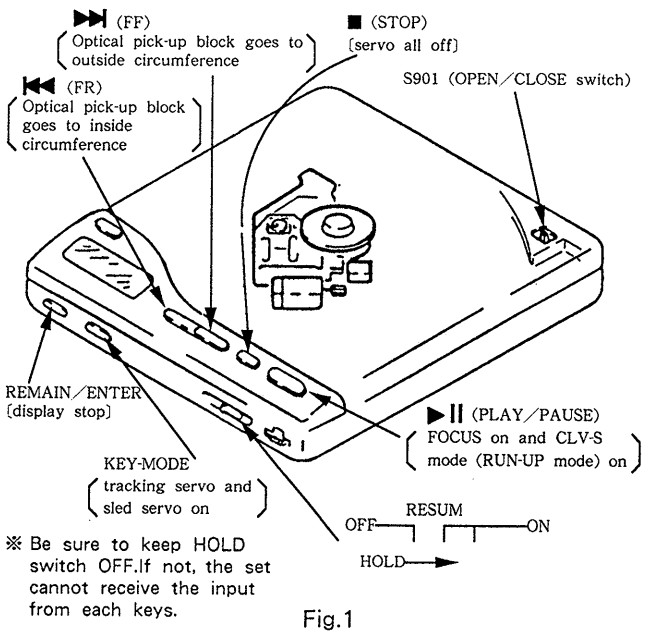

Fig.1

• Step 3 (Service Mode release)

1. First be sure to unplug the external power supply.
2. Then remove the solder jumper TEST terminal.
3. The set will now operated normally.

SECTION 3
ELECTRICAL ADJUSTMENTS

Notes on Adjustment

1. Perform adjustments except for BATTERY REMAINS ADJUSTMENT in service mode.
   Be sure to release service mode after completing adjustment.
   (Refer to "Service Mode (service program)" on page 4.)
2. Perform adjustments in the order given.
3. Use YEDS-18 disc (part No. : 3-702-101-01) only indicated.
4. Power supply voltage : DC 6V
   HOLD switch : OFF
   VOLUME knob : MIN

PREPARATION

Put the set into service mode (See page 4.) and perform the following checks.

• Sled Motor Check

1. Press the OPEN button and open the top panel.
2. Press the ⏭, ⏮ keys and make sure that the optical pick-up block moves smoothly, without catching, from the inmost → outmost → inmost circumference.
   ⏭ : UPF moves outward
   ⏮ : UPF moves inward

• Focus Search Check

1. Press the OPEN button and open the top panel.
2. Press the ▶II key. (Focus search is performed continuously.)
3. Observe the UPF objective lens and check that it moves smoothly up and down with no catching or noises.
4. Press the ■ key.
   Check that focus search operation stops. If it does not, press the ■ key again.

Recharging voltage Adjustment

Adjustment method :

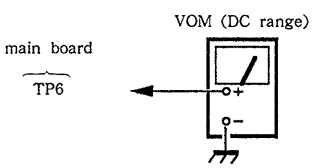

1. Connect a tester to TP6 of the main circuit board.
2. Apply 6V DC from the external power jack CN401.
3. Adjust RV402 so that the reading of the tester becomes 4.9V – 5V.

Note :Read the value after that the read of the tester becomes clam.

+3.6V Adjustment

Adjustment method :

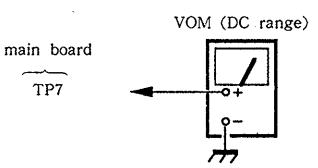

1. Aadjust the power voltage after applying +3.0V between the terminals of BATT (AM3).
2. Set the set to the service mode stop status.(see page 4.)
3. Connect a tester to TP7 of the main circuit board.
4. Adjust RV403 so that the reading of the tester becomes 3.55V – 3.65V.
5. After performing adjustment, release the service mode.

+5V Adjustment

Adjustment Procedure :

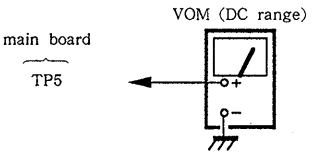

1. Put the set into STOP state service mode (see page 4).
2. Connect the VOM to main board test point TP5
3. Adjust RV401 for 5V±0.5V on the VOM reading.
4. After adjustment, release service mode (see page 4).

Battery Remains Indication Adjustment

Adjustment procedure :

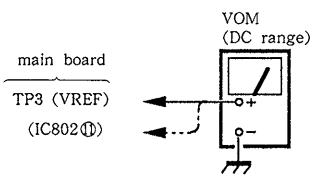

1. Make sure to turn ON S401
2. Apply DC 3.5V both side of battery terminal.
3. Insert the disc (YEDS-18) and press the ▶II key.
4. Adjust RV801 so that the voltage of TP4 (IC802⑪) is the same as TP3 (V REF).

PLL Free Run Frequency Check and Adjustment

Check/Adjustment Procedure :

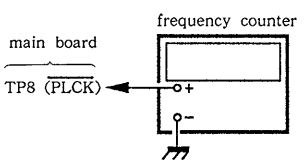

1. Open the jumper terminal of Z3 (EFM).
2. Connect a frequency counter to test point TP8 ($\overline{\text{PLCK}}$) of the main circuit board.
3. Set the unit to the service mode stop status.(see page 4.)
4. Confirm that the reading of the frequency counter is 4.31±0.01MHz.
   If that is not the case, adjust RV504 so that the reading of the frequency counter becomes 4.31±0.01MHz.
5. After performing adjustment, release the service mode. (see page 4.)
6. Short circuit the jumper terminal which was opened in step 1 above

Tracking Balance Adjustment

Conditions :

The set should be placed either horizontally.

Adjustment Procedure :

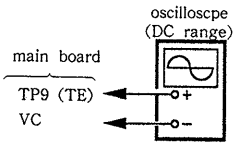

1. Connect the oscilloscope to main board TP9 (IC501①).
2. Put the set into service mode (See page 4.)
3. Press the ⏭ and ⏮ keys to move the UPF to the center.
4. Insert the disc (YEDS-18) and close the top panel.
5. Press the ▶II key.
   It will go from focus search to focus on, and CLV pull-in mode state. Tracking and sled are OFF.
6. Adjust RV502 so that the oscilloscope wavaform is symmetrical on the top and bottom in relation to 0V.

Note : Take sweep time as long as possible to obtain best waveform.

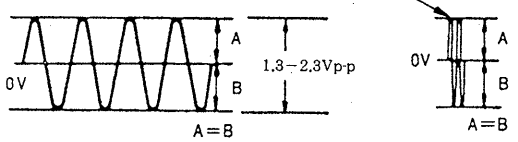

7. Unplug the external power supply to stop spindle motor from rotating.
8. After adjustment, release service mode (see page 4).

Focus Bias Adjustment

Conditions :

The set should be placed either horizontally.

Adjustment Procedure :

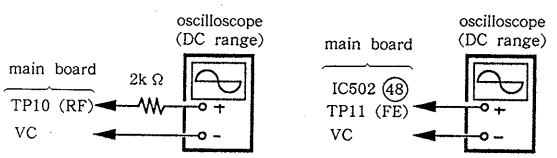

1. Put the set into STOP state in service mode (See page 4).
2. Connect the oscilloscope to main board test point TP10(IC501⑭).
3. Press the ⏭ and ⏮ key to move the UPF to the center. (Move the UPF to the music area on the disc to enable easy visibility of the eye pattern).
4. Insert the disc (YEDS-18) and close the top panel.
5. Press the ▶II key.
6. Press the KEY-MODE button.
7. Adjust RV503 so that the oscilloscope waveform eye pattern is good. A good eye pattern means that the diamond shape (◇) in the center of the waveform can be clearly distinguished.

• RF Signal Reference Waveform (eye pattern)

VOLT/DIV : 200mV
TIME/DIV : 500nS

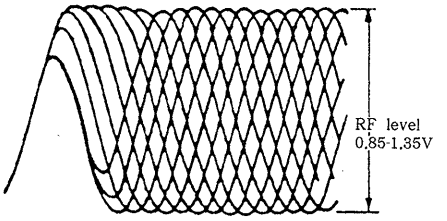

When observing the eye pattern, set the oscilloscope for AC range and raise vertical sensitivity.

8. Measure the voltage of TP11 (IC502㊽).(Service mode stop status)
   Readjust RV503 according to the voltage range as follows :
   When minimum +10mV, set to +10mV, and when less than −50mV, set to−50mV.
9. Remove the external power supply and stop the spindle motor.
10. Release the service mode.

Adjustment Parts Location Diagram

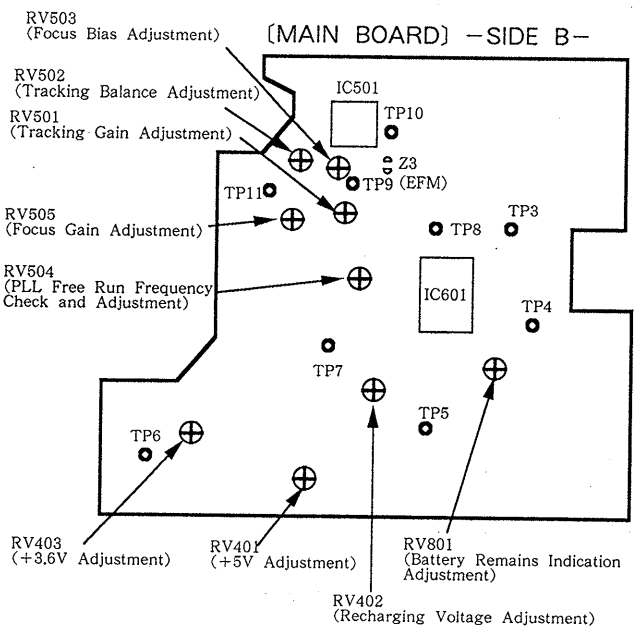

Reference

Focus/Tracking Gain Adjustment

On this set, it is very difficult to simplify this adjustment.
A frequency responce analyzer or CD jig is necessary in order to perform this adjustment exactly.

However, this gain has a margin, so even if it is slightly off, there is no problem. Therefore, do not perfrom this adjustment.

Focus/tracking gain determines the pick-up followup (vertical and horizontal) relative to mechanical noise and mechanical shock when the 2-axis device operate.

- When gain is high, the noise when the 2-axis device operates increases.
- When gain is low, it is more susceptible to mechanical shock and skipping occurs more easily.

However, as these reciprocate, the adjustment is at the point where both are satisfied.
This adjustment is to be performed with using when replacing the following parts :

- UPF (optical pick-up block)
- RV501 (tracking gain volume)
- RV505 (focus gain volume)

CD jig connection :
Remove the solder jumpers at the TE and FE locations and connect the CD jig.
The adjustment procedure is described in the separate CD jig Instruction Manual.

Adjustment Parts Location Diagram
[MAIN BOARD] –SIDE B–

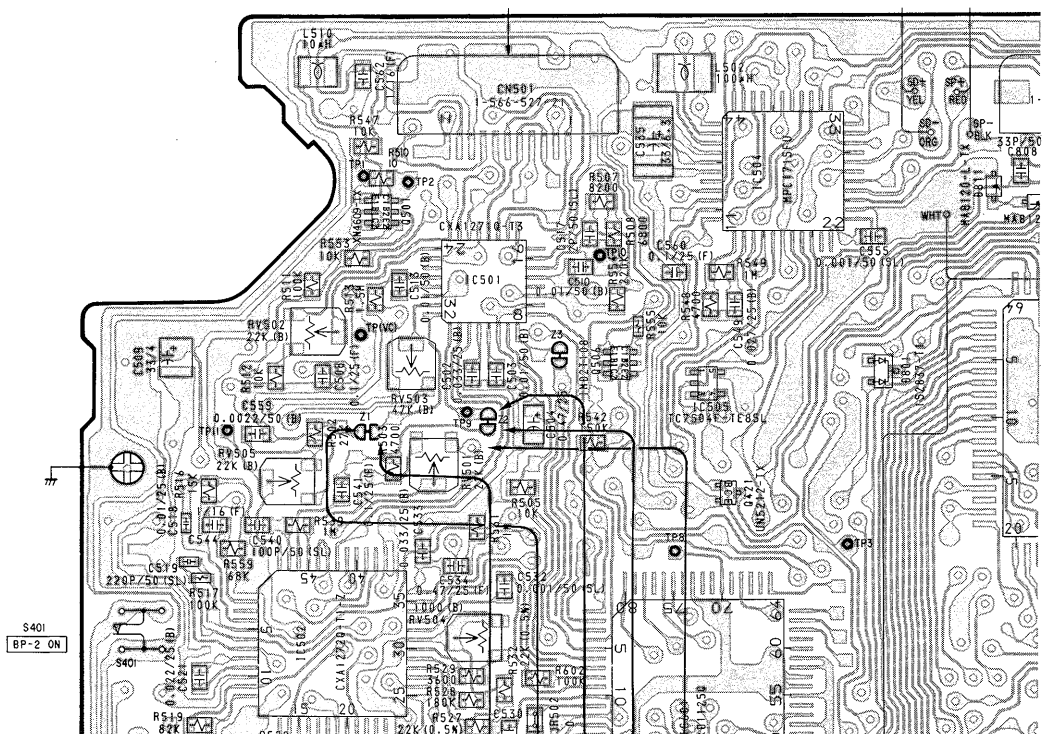

CD jig connection :

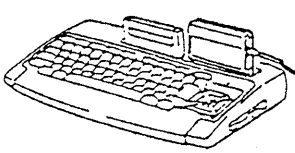

CD jig

Fig.3

SECTION 4
DIAGRAMS

4-1. BLOCK DIAGRAMS

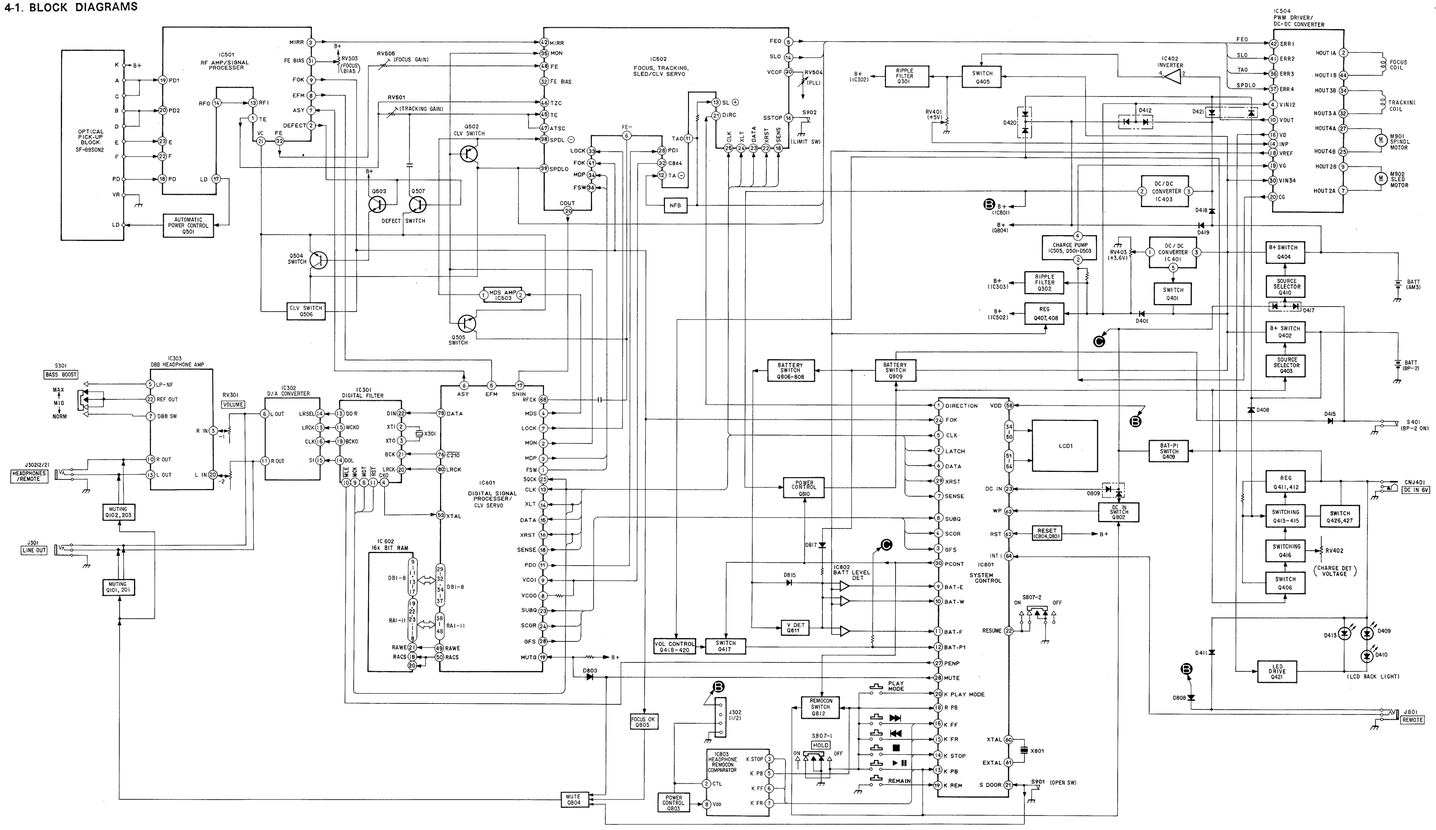

4-2. CIRCUIT BOARDS/SWITCHES/MOTORS LOCATION

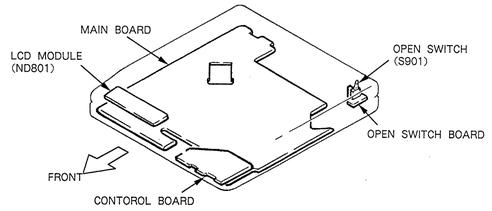

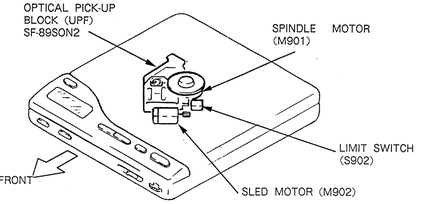

• LCD MODULE (LCD 1)

SEGMENT

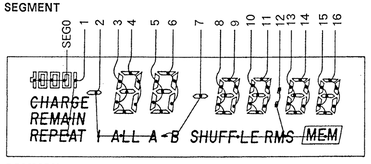

COMMON

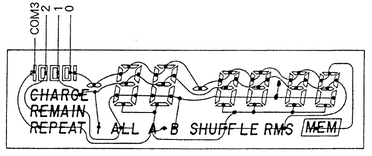

4-3. SEMICONDUCTOR LEAD LAYOUTS

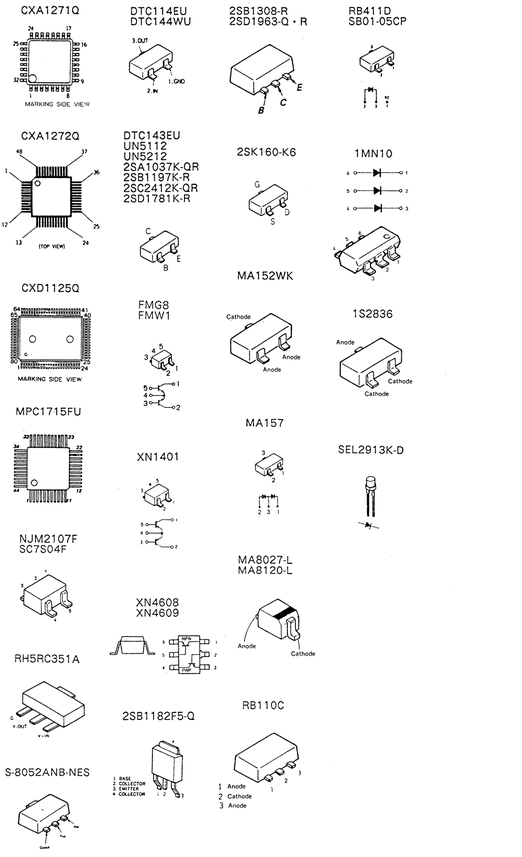

• **Semiconductor Location**

Ref. No	Location	Ref. No	Location
IC301	H-29	Q507	E-15
IC302	I-26	Q801	E-9
IC303	I-28	Q802	C-10
IC401	J-22	Q803	E-10
IC402	J-14	Q804	G-7
IC403	J-24	Q805	G-8
IC501	C-25	Q806	F-10
IC502	E-24	Q807	F-9
IC503	C-12	Q808	F-9
IC504	B-27	Q809	F-9
IC505	D-16	Q810	J-13
IC601	F-26	Q811	H-18
IC602	F-11	Q812	E-9
IC801	D-29		
IC802	G-28	D301	K-27
IC803	E-10	D302	K-26
IC804	C-11	D401	I-22
		D402	J-23
		D403	H-25
Q101	K-11		
Q103	I-7	D404	J-24
Q201	J-10	D405	H-24
Q203	J-7	D407	K-14
Q301	I-11	D408	J-21
		D409	D-7
Q302	J-8		
Q401	J-22	D410	C-7
Q402	I-21	D411	H-22
Q403	J-15	D412	G-23
Q404	J-17	D413	B-7
		D414	H-21
Q405	J-14		
Q406	H-11	D415	H-22
Q407	I-15	D416	J-20
Q408	I-15	D417	H-22
Q409	D-10	D418	J-15
		D419	J-16
Q410	J-20		
Q411	H-23	D420	I-15
Q412	I-13	D421	I-16
Q413	H-12	D501	C-11
Q414	H-12	D502	D-11
		D503	D-11
Q415	H-12		
Q416	H-24	D801	D-27
Q417	J-13	D802	G-27
Q418	J-25	D803	F-29
Q419	J-24	D804	D-11
		D805	D-10
Q420	J-25		
Q421	D-26	D806	D-9
Q426	H-25	D808	E-11
Q427	H-25	D809	D-10
Q501	B-24	D810	B-28
		D811	B-28
Q502	D-13		
Q503	D-14	D815	H-28
Q504	D-13	D816	E-9
Q505	D-13	D817	G-8
Q506	D-26		

Note on Printed Wiring Boards :

- ○— : parts extracted from the component side.
- ●— : parts extracted from the conductor side.
- ■ : parts mounted on the conductor side.
- ◇ : Through hole.
- : Pattern on the side which is seen.
- : Pattern of the rear side.

4-4. PRINTED WIRING BOARDS

• See page 11 for Semiconductor Lead Layouts.

[CONTROL BOARD (SIDE A)]

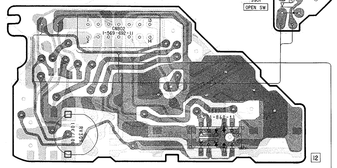

[OPEN SW BOARD]

[CONTROL BOARD (SIDE B)]

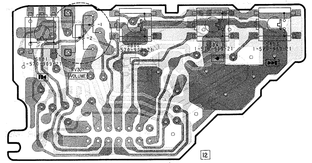

OPTICAL PICK-UP BLOCK SF-995ON2

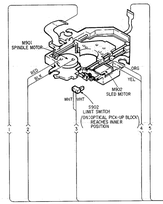

[MAIN BOARD (SIDE A)]

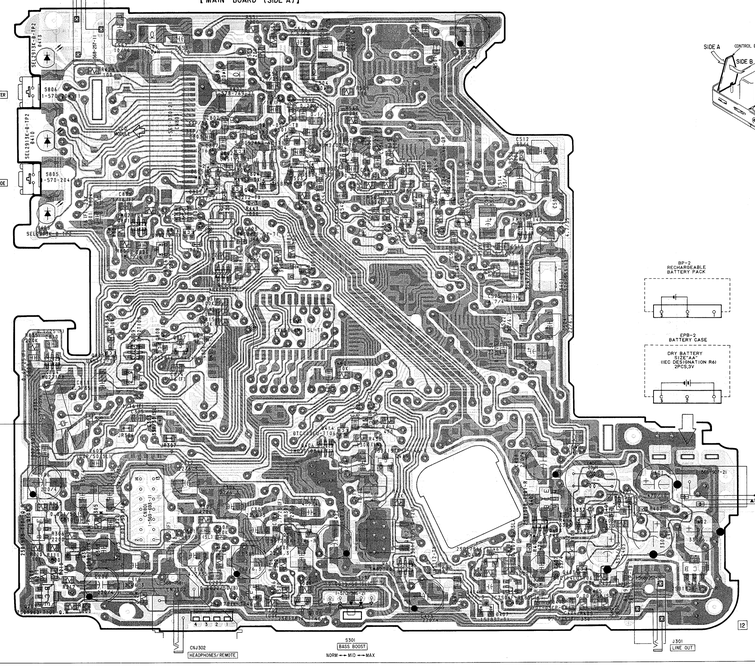

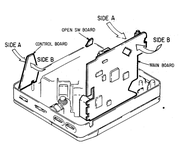

BP-2 RECHARGEABLE BATTERY PACK

BPM-3 BATTERY CASE

DRY BATTERY SIZE "AA" (IEC DESIGNATION R6) DECTRON SPIRLEY

[MAIN BOARD (SIDE B)]

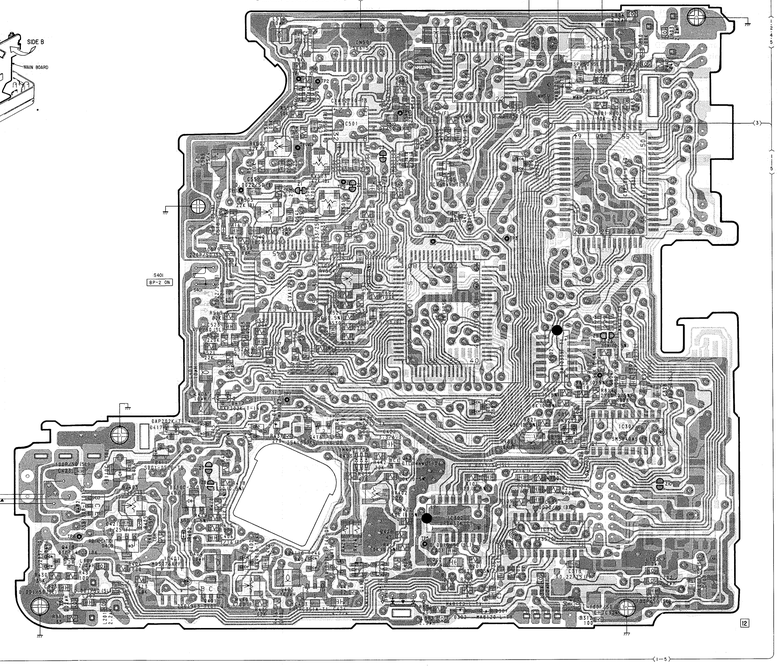

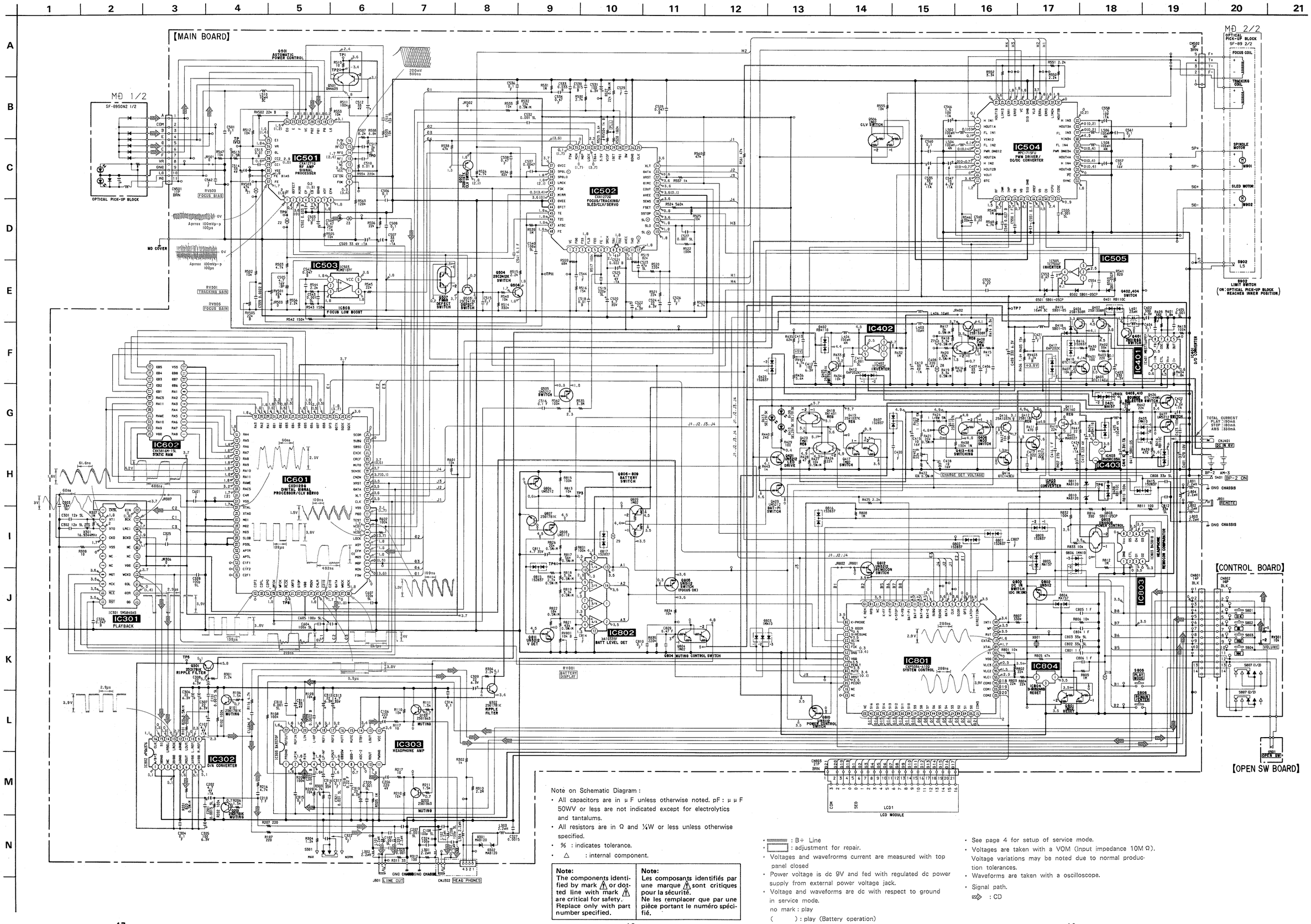

Note on Schematic Diagram :

- All capacitors are in μ F unless otherwise noted. pF : μ μ F 50WV or less are not indicated except for electrolytics and tantalums.
- All resistors are in Ω and ¼W or less unless otherwise specified.
- % : indicates tolerance.
- △ : internal component.

Note: The components identified by mark ⚠ or dotted line with mark ⚠ are critical for safety. Replace only with part number specified.	**Note:** Les composants identifiés par une marque ⚠ sont critiques pour la sécurité. Ne les remplacer que par une pièce portant le numéro spécifié.

- ▭ : B+ Line
- ▭ : adjustment for repair.
- Voltages and waveforms current are measured with top panel closed
- Power voltage is dc 9V and fed with regulated dc power supply from external power voltage jack.
- Voltage and waveforms are dc with respect to ground in service mode.

no mark : play
( ) : play (Battery operation)

- See page 4 for setup of service mode.
- Voltages are taken with a VOM (Input impedance 10M Ω). Voltage variations may be noted due to normal production tolerances.
- Waveforms are taken with a oscilloscope.
- Signal path.
  ⇨ : CD

4-6. IC BLOCK DIAGRAMS

IC301 SM5840AS

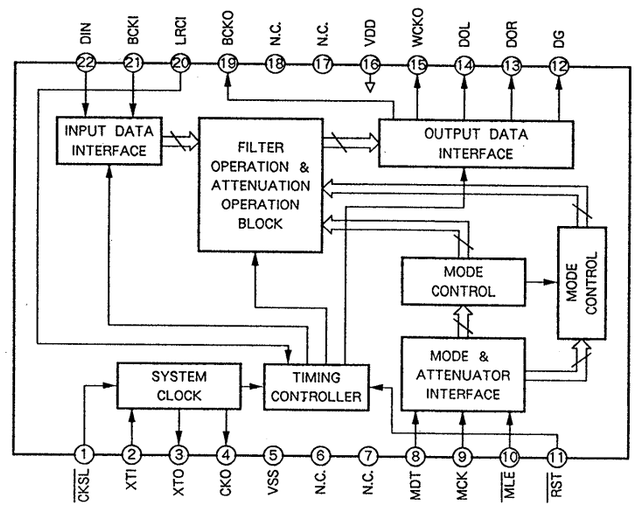

IC302 μPD6376

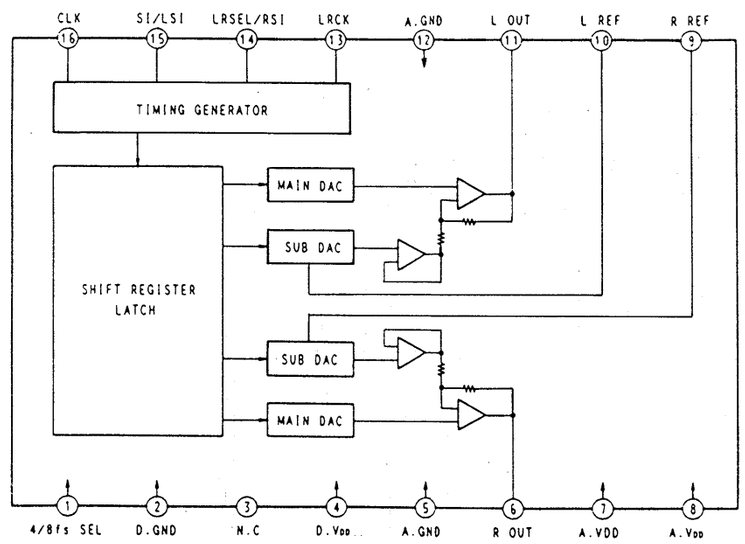

IC303 BA3570F

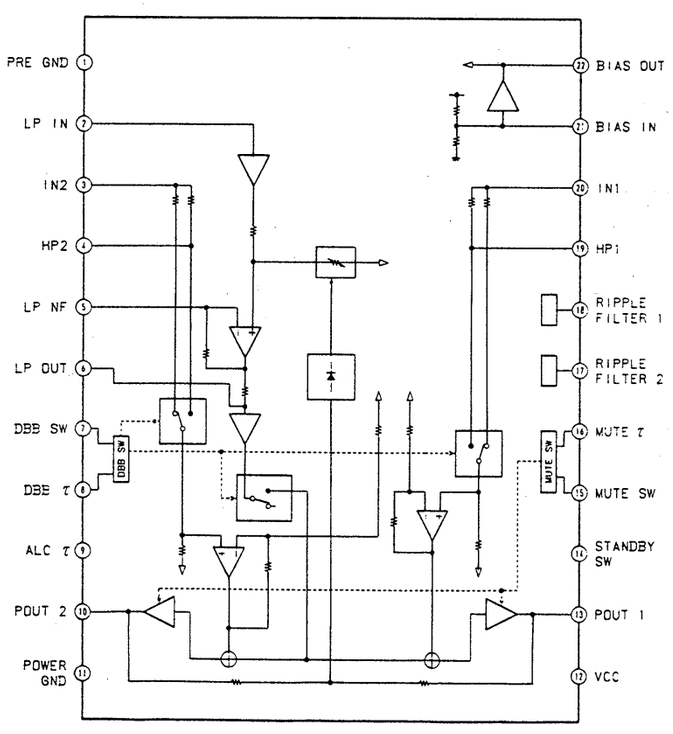

IC401 MB3776APF

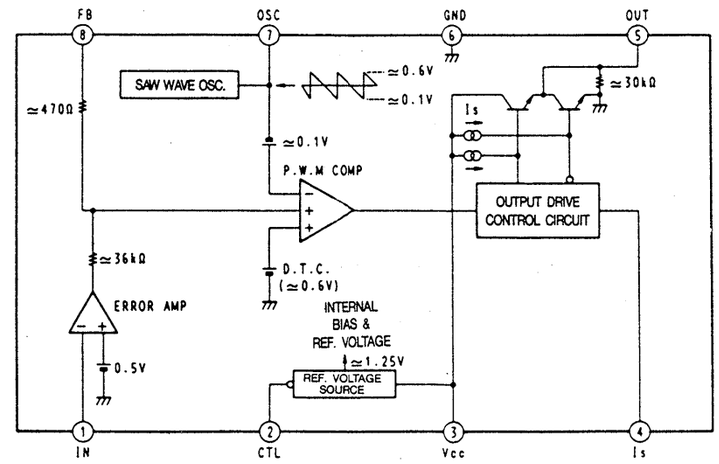

IC501 CXA1271Q

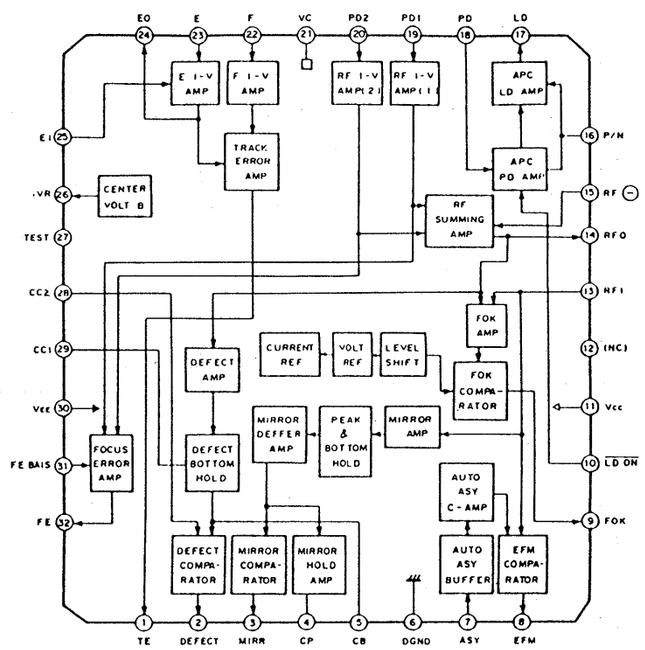

IC502 CXA1272Q

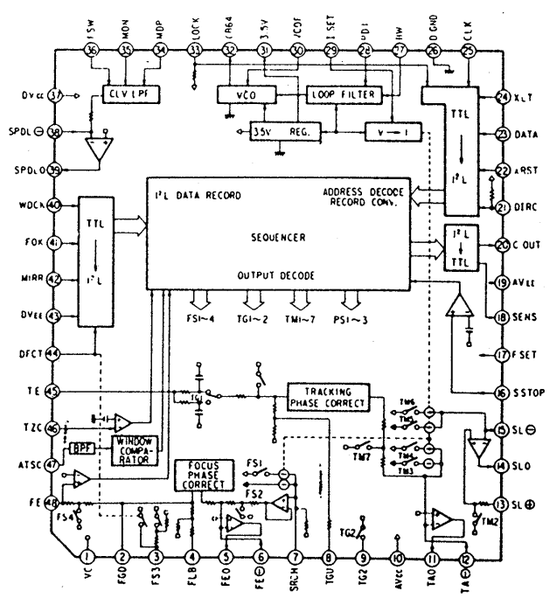

IC504 MPC1715

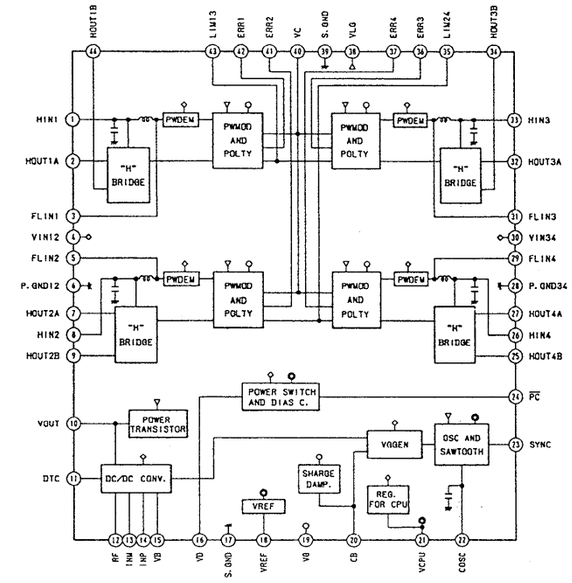

IC803 BA3818F-SY

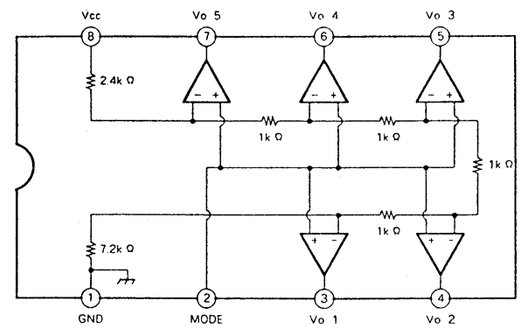

IC601 CXD1125Q

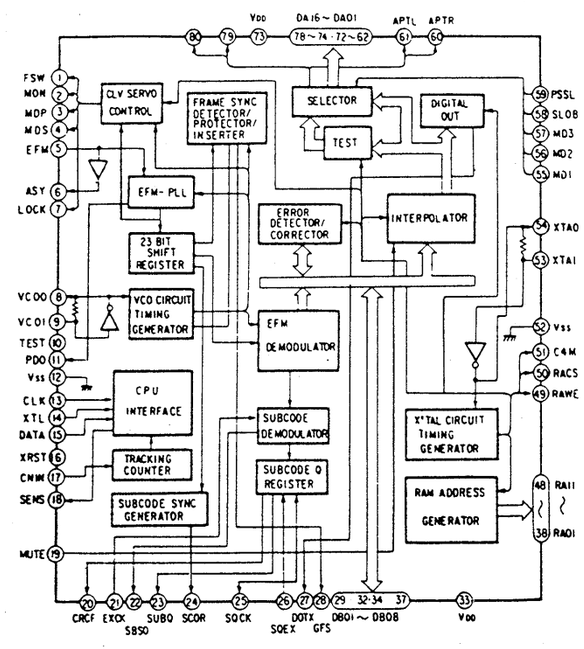

SECTION 5
EXPLODED VIEWS

NOTE:

- The mechanical parts with no reference number in the exploded views are not supplied.
- The construction parts of an assembled part are indicated with a collation number in the remark column.
- Items marked "★" are not stocked since they are seldom required for routine service. Some delay should be anticipated when ordering these items.
- Due to standardization, parts with part number suffix -XX and -X may be different from the parts specified in the components used on the set.
- Color Indication of Appearance Parts Example:
  (RED) . . . KNOB, BALANCE (WHITE)
  ↑ Cabinet's Color ↑ Parts' Color

The components identified by mark ⚠ or dotted line with mark ⚠ are critical for safety.
Replace only with part number specified.

Les composants identifiés par une marque ⚠ sont critiques pour la sécurité.
Ne les remplacer que par une pièce portant le numéro spécifé.

• AUS ••• Australian model

(1) UPPER/BOTTOM SECTION

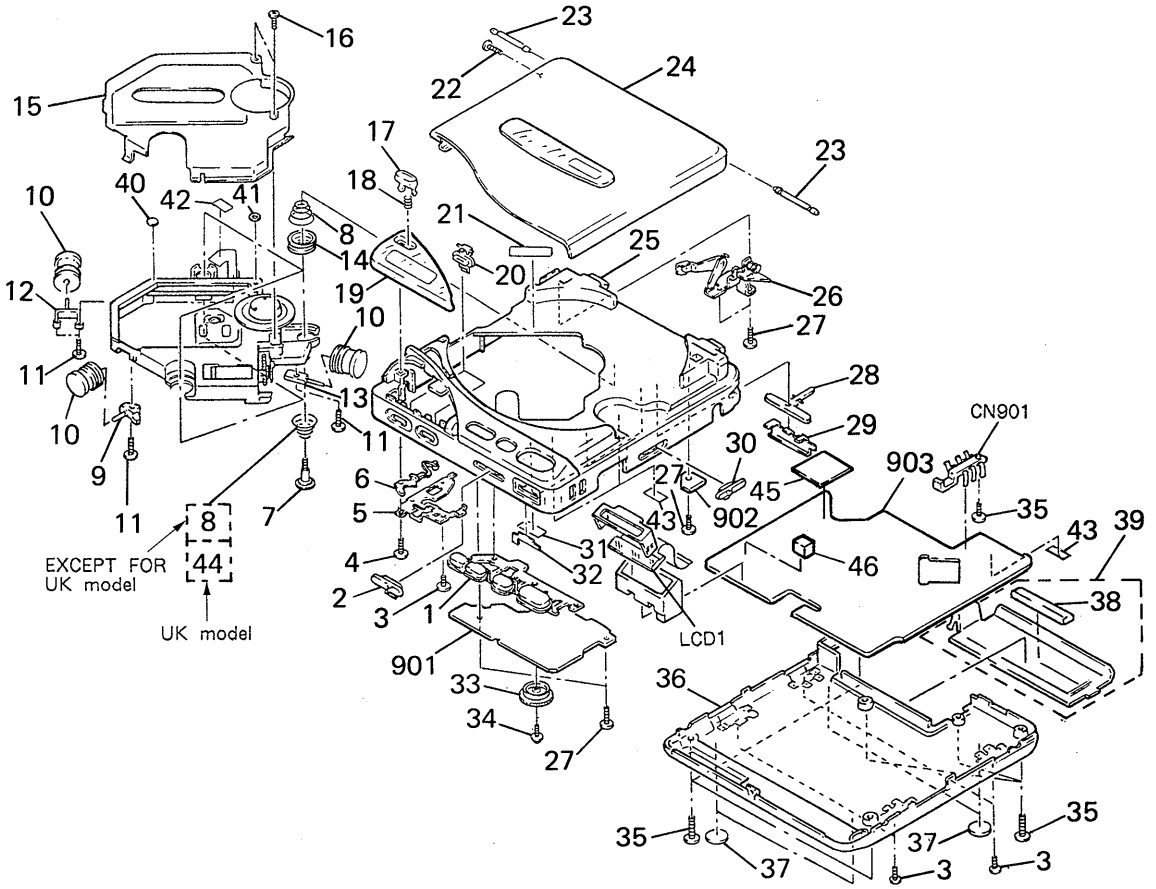

No.	Part No.	Description	Remarks
1	4-931-847-01	BUTTON (FRS)	
2	4-931-841-01	KNOB (HOLD)	
3	3-703-816-42	SCREW (M1.4X2.5), SPECIAL HEAD	
4	3-703-816-22	SCREW (M1.4X5.0), SPECIAL HEAD	
5	4-931-851-01	PLATE (LOCK), FIXED	
6	4-931-850-01	CLAW, LOCK	
7	4-924-718-01	SCREW, INSULATOR	
8	4-931-835-01	SPRING	
9	4-931-868-01	SHAFT (C), DAMPER	
10	3-323-234-11	DAMPER (2), HYPER	
11	3-318-203-71	SCREW (B1.7X5), TAPPING	
12	4-931-867-01	SHAFT (B), DAMPER	
13	4-931-866-01	SHAFT (A), DAMPER	
14	4-931-834-01	RETAINER, SPRING	
15	4-931-854-01	COVER, MD	
16	3-893-942-01	SCREW (1.7X4), TAPPING (B)	
17	4-931-845-01	BUTTON (OPEN)	
18	4-931-833-01	SPRING (OPEN)	
19	X-4930-131-1	WINDOW (LCD) ASSY	
20	4-931-844-01	BUTTON (MODE)	
21	4-908-711-01	LABEL, CAUTION, LENS	
22	4-931-890-01	SCREW (M1.7X0.35)	
23	4-931-825-01	SHAFT (FULCRUM)	
24	X-4930-135-1	LID ASSY, UPPER	
25	4-931-858-01	CABINET	
26	X-4930-130-1	PLATE ASSY, SWITCHING	

No.	Part No.	Description	Remarks
27	3-342-073-01	SCREW (1.7X4), TAPPING	
28	4-931-839-01	ARM, DETECTION	
29	4-931-824-01	PLATE (DETECTION), FIXED	
30	4-931-840-01	KNOB (DBB)	
31	*4-926-115-01	CUSHION (P)	
32	*4-931-884-01	PAPER (VOL), SHIELD	
33	4-931-848-01	KNOB (VOLUME)	
34	3-335-797-21	SCREW (M1.4X3), TOOTHED LOCK	
35	7-621-283-10	SCREW (B2X10) (G), TAPPING	
36	X-4930-132-1	PANEL ASSY, BOTTOM	
37	4-912-641-01	FOOT, RUBBER	
38	9-911-815-01	CUSHION (A)	
39	X-4930-136-1	LID ASSY, BATTERY CASE	
40	4-917-784-01	SPACER (S)	
41	4-927-949-01	WASHER	
42	4-941-190-01	SPACER (PAL)	
43	*3-561-902-11	CLOTH, RETAINING, CASSETTE	
44	4-931-893-01	(UK)...SPRING (B)	
45	3-831-441-XX	SHIELD (MAIN)	
46	9-911-841-XX	CUSHION, CASSETTE LID	
901	*1-635-025-11	PC BOARD, CONTROL	
902	*1-635-416-11	PC BOARD, OPEN SW	
903	*A-3015-900-A	(EXCEPT UK)...PC BOARD ASSY, MAIN	
	*A-3015-922-A	(UK).....PC BOARD ASSY, MAIN	
CN901	4-931-852-01	TERMINAL, BATTERY	
LCD1	1-809-047-11	DISPLAY PANEL, LIQUID CRYSTAL	

(2) MECHANISM SECTION (CDM-66)

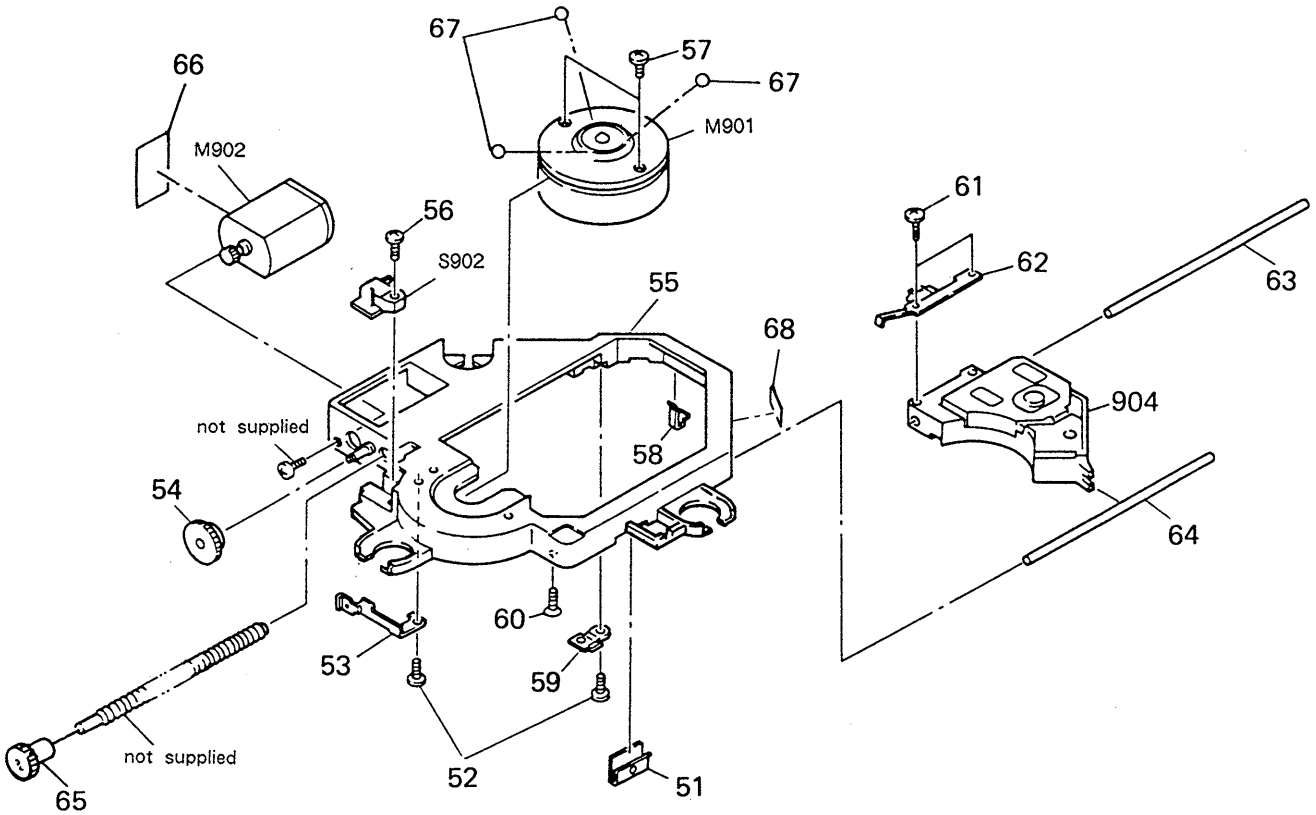

Note:	Note:
The components identified by mark ⚠ or dotted line with mark ⚠ are critical for safety. Replace only with part number specified.	Les composants identifiés par une marque ⚠ sont critiques pour la sécurité. Ne les remplacer que par une pièce portant le numéro spécifié.

No.	Part No.	Description	Remarks
51	4-932-779-11	RETAINER (A), FLEXIBLE	
52	3-895-823-41	SCREW (B1.4X4), TAPPING	
53	4-931-863-01	SPRING, LEAF	
54	4-931-861-01	GEAR (B)	
55	4-931-864-01	CHASSIS, MD	
56	4-908-792-91	SCREW (B2X7), TAPPING, P1	
57	7-627-450-48	SCREW, PRECISION +K1.7X2.5 TYPE1	
58	4-932-777-01	RETAINER (B), FLEXIBLE	
59	4-932-776-01	RETAINER, SHAFT	
60	4-941-983-01	SCWER (B1.7X6), SPECIAL	
61	3-303-809-01	SCREW (M1.7X2.0), SPECIAL HEAD	
62	4-932-785-11	RACK (OUTSERT)	
63	4-932-784-01	SHAFT (A)	
64	4-931-862-21	SHAFT (B)	
65	4-932-774-01	GEAR (C)	
66	3-831-441-11	CUSHION (B)	
67	7-671-155-01	STEEL BALL 3.0	
68	3-831-441-XX	SPACER, KNOB	
904	⚠X-4930-137-1	OPTICAL PICK-UP (SF-89SON2)	
M901	A-3133-413-A	MOTOR ASSY, CLV (SPINDLE MOTOR)	
M902	X-4921-256-1	FEED MOTOR (SLED MOTOR)	
S902	1-570-771-11	SWICH, MICRO	

SECTION 6
ELECTRICAL PARTS LIST

NOTE:

- Due to standardization, replacements in the parts list may be different from the parts specified in the diagrams or the components used on the set.
- Items marked "★" are not stocked since they are seldom required for routine service. Some delay should be anticipated when ordering these items.
- If there are two or more same circuits in a set such as a stereophonic machine, only typical circuit parts may be indicated and capacitors and resistors in other same circuits may be omitted.

CAPACITORS:
MF: μF, PF: μμF.

RESISTORS
- All resistors are in ohms.
- F: nonflammable

COILS
- MMH: mH, UH: μH

SEMICONDUCTORS
In each case, U: μ, for example:
UA...: μA..., UPA...: μPA...,
UPC...: μPC, UPD...: μPD...

The components identified by mark ⚠ or dotted line with mark ⚠ are critical for safety.
Replace only with part number specified.

Les composants identifiés par une marque ⚠ sont critiques pour la sécurité.
Ne les remplacer que par une pièce portant le numéro spécifié.

• AUS ••• Australian model

Ref.No.	Part No.	Description			
901	*1-635-025-11	PC BOARD, CONTROL			
902	*1-635-416-11	PC BOARD, OPEN SW			
903	*A-3015-900-A	(EXCEPT UK)...PC BOARD ASSY, MAIN			
	*A-3015-922-A	(UK).....PC BOARD ASSY, MAIN			
904	⚠X-4930-137-1	OPTICAL PICK-UP (SF-89SON2)			
C101	1-163-145-00	CERAMIC CHIP	0.0015MF	5%	50V
C102	1-135-151-21	TANTAL. CHIP	4.7MF	20%	4V
C106	1-126-246-11	ELECT CHIP	220MF	20%	4V
C107	1-163-141-00	CERAMIC CHIP	0.001MF	5%	50V
C108	1-163-117-00	CERAMIC CHIP	100PF	5%	50V
C109	1-164-161-11	CERAMIC CHIP	0.0022MF	10%	50V
C110	1-164-346-11	CERAMIC CHIP	1MF		16V
C201	1-163-145-00	CERAMIC CHIP	0.0015MF	5%	50V
C202	1-135-151-21	TANTAL. CHIP	4.7MF	20%	4V
C206	1-126-246-11	ELECT CHIP	220MF	20%	4V
C207	1-163-141-00	CERAMIC CHIP	0.001MF	5%	50V
C208	1-163-117-00	CERAMIC CHIP	100PF	5%	50V
C209	1-164-161-11	CERAMIC CHIP	0.0022MF	10%	50V
C210	1-164-346-11	CERAMIC CHIP	1MF		16V
C301	1-163-095-00	CERAMIC CHIP	12PF	5%	50V
C302	1-163-095-00	CERAMIC CHIP	12PF	5%	50V
C303	1-163-105-00	CERAMIC CHIP	33PF	5%	50V
C304	1-163-038-00	CERAMIC CHIP	0.1MF		25V
C305	1-126-206-11	ELECT CHIP	100MF	20%	6.3V
C306	1-124-778-00	ELECT CHIP	22MF	20%	6.3V
C307	1-124-778-00	ELECT CHIP	22MF	20%	6.3V
C308	1-124-778-00	ELECT CHIP	22MF	20%	6.3V
C309	1-124-778-00	ELECT CHIP	22MF	20%	6.3V
C310	1-163-141-00	CERAMIC CHIP	0.001MF	5%	50V
C311	1-126-207-11	ELECT CHIP	33MF	20%	4V
C312	1-124-778-00	ELECT CHIP	22MF	20%	6.3V
C313	1-126-603-11	ELECT CHIP	4.7MF	20%	35V
C314	1-163-038-00	CERAMIC CHIP	0.1MF		25V
C315	1-163-038-00	CERAMIC CHIP	0.1MF		25V
C316	1-126-603-11	ELECT CHIP	4.7MF	20%	35V
C317	1-163-038-00	CERAMIC CHIP	0.1MF		25V
C318	1-164-222-11	CERAMIC CHIP	0.22MF		25V
C319	1-124-778-00	ELECT CHIP	22MF	20%	6.3V
C320	1-163-141-00	CERAMIC CHIP	0.001MF	5%	50V
C321	1-163-141-00	CERAMIC CHIP	0.001MF	5%	50V
C322	1-164-156-11	CERAMIC CHIP	0.1MF		25V
C323	1-163-141-00	CERAMIC CHIP	0.001MF	5%	50V
C324	1-162-953-11	CERAMIC CHIP	100PF	5%	50V
C325	1-164-346-11	CERAMIC CHIP	1MF		16V
C326	1-163-809-11	CERAMIC CHIP	0.047MF	10%	25V
C327	1-163-145-00	CERAMIC CHIP	0.0015MF	5%	50V
C328	1-163-117-00	CERAMIC CHIP	100PF	5%	50V
C401	1-124-472-11	ELECT	470MF	20%	10V
C402	1-126-245-11	ELECT	330MF	20%	6.3V
C403	1-126-245-11	ELECT	330MF	20%	6.3V
C404	1-163-038-00	CERAMIC CHIP	0.1MF		25V
C405	1-163-141-00	CERAMIC CHIP	0.001MF	5%	50V
C406	1-164-346-11	CERAMIC CHIP	1MF		16V
C407	1-126-207-11	ELECT CHIP	33MF	20%	4V
C408	1-126-246-11	ELECT CHIP	220MF	20%	4V
C409	1-126-245-11	ELECT	330MF	20%	6.3V
C410	1-135-162-21	TANTAL. CHIP	33MF	20%	4V
C411	1-163-141-00	CERAMIC CHIP	0.001MF	5%	50V
C412	1-126-206-11	ELECT CHIP	100MF	20%	6.3V
C413	1-164-346-11	CERAMIC CHIP	1MF		16V
C414	1-135-157-21	TANTAL. CHIP	10MF	20%	6.3V
C415	1-126-246-11	ELECT CHIP	220MF	20%	4V
C416	1-164-346-11	CERAMIC CHIP	1MF		16V
C417	1-163-037-11	CERAMIC CHIP	0.022MF	10%	25V
C418	1-124-779-00	ELECT CHIP	10MF	20%	16V
C419	1-124-779-00	ELECT CHIP	10MF	20%	16V
C420	1-164-346-11	CERAMIC CHIP	1MF		16V
C421	1-163-038-00	CERAMIC CHIP	0.1MF		25V
C422	1-135-180-21	TANTAL. CHIP	3.3MF	20%	6.3V
C423	1-163-117-00	CERAMIC CHIP	100PF	5%	50V
C424	1-135-151-21	TANTAL. CHIP	4.7MF	20%	4V
C501	1-163-038-00	CERAMIC CHIP	0.1MF		25V
C502	1-163-989-11	CERAMIC CHIP	0.033MF	10%	25V
C503	1-164-232-11	CERAMIC CHIP	0.01MF	10%	50V
C504	1-135-145-11	TANTAL. CHIP	0.47MF	20%	25V
C505	1-126-603-11	ELECT CHIP	4.7MF	20%	16V
C506	1-163-038-00	CERAMIC CHIP	0.1MF		25V
C507	1-135-162-21	TANTAL. CHIP	33MF	20%	4V
C508	1-163-038-00	CERAMIC CHIP	0.1MF		25V
C509	1-135-162-21	TANTAL. CHIP	33MF	20%	4V
C510	1-164-232-11	CERAMIC CHIP	0.01MF	10%	50V
C511	1-163-095-00	CERAMIC CHIP	12PF	5%	50V
C512	1-126-207-11	ELECT CHIP	33MF	20%	4V
C513	1-164-232-11	CERAMIC CHIP	0.01MF	10%	50V
C514	1-126-207-11	ELECT CHIP	33MF	20%	4V
C515	1-163-038-00	CERAMIC CHIP	0.1MF		25V
C516	1-163-038-00	CERAMIC CHIP	0.1MF		25V
C517	1-163-085-00	CERAMIC CHIP	2PF	0.25PF	50V
C518	1-162-970-11	CERAMIC CHIP	0.01MF	10%	25V

Ref.No.	Part No.	Description		
C519	1-162-957-11	CERAMIC CHIP 220PF	5%	50V
C520	1-126-603-11	ELECT CHIP 4.7MF	20%	35V
C521	1-163-037-11	CERAMIC CHIP 0.022MF	10%	25V
C522	1-124-778-00	ELECT CHIP 22MF	20%	6.3V
C523	1-163-109-00	CERAMIC CHIP 47PF	5%	50V
C524	1-124-778-00	ELECT CHIP 22MF	20%	6.3V
C525	1-135-151-21	TANTAL. CHIP 4.7MF	20%	4V
C526	1-163-038-00	CERAMIC CHIP 0.1MF		25V
C527	1-163-141-00	CERAMIC CHIP 0.001MF	5%	50V
C528	1-163-809-11	CERAMIC CHIP 0.047MF	10%	25V
C529	1-164-346-11	CERAMIC CHIP 1MF		16V
C530	1-163-023-00	CERAMIC CHIP 0.015MF	10%	50V
C531	1-126-206-11	ELECT CHIP 100MF	20%	6.3V
C532	1-163-141-00	CERAMIC CHIP 0.001MF	5%	50V
C533	1-163-989-11	CERAMIC CHIP 0.033MF	10%	25V
C534	1-164-005-11	CERAMIC CHIP 0.47MF		25V
C535	1-135-162-21	TANTAL. CHIP 33MF	20%	6.3V
C536	1-163-038-00	CERAMIC CHIP 0.1MF		25V
C537	1-163-017-00	CERAMIC CHIP 0.0047MF	10%	50V
C538	1-162-637-11	CERAMIC CHIP 0.47MF		16V
C540	1-163-117-00	CERAMIC CHIP 100PF	5%	50V
C541	1-163-038-00	CERAMIC CHIP 0.1MF		25V
C542	1-163-809-11	CERAMIC CHIP 0.047MF	10%	25V
C543	1-163-141-00	CERAMIC CHIP 0.001MF	5%	50V
C544	1-164-346-11	CERAMIC CHIP 1MF		16V
C546	1-135-148-21	TANTAL. CHIP 1.5MF	20%	10V
C547	1-135-157-21	TANTAL. CHIP 10MF	20%	6.3V
C548	1-164-222-11	CERAMIC CHIP 0.22MF		25V
C549	1-163-986-00	CERAMIC CHIP 0.027MF	10%	25V
C550	1-164-346-11	CERAMIC CHIP 1MF		16V
C551	1-163-038-00	CERAMIC CHIP 0.1MF		25V
C552	1-164-222-11	CERAMIC CHIP 0.22MF		25V
C553	1-164-005-11	CERAMIC CHIP 0.47MF		25V
C554	1-164-346-11	CERAMIC CHIP 1MF		16V
C555	1-163-141-00	CERAMIC CHIP 0.001MF	5%	50V
C557	1-124-779-00	ELECT CHIP 10MF	20%	16V
C558	1-135-148-21	TANTAL. CHIP 1.5MF	20%	10V
C559	1-164-161-11	CERAMIC CHIP 0.0022MF	10%	50V
C560	1-163-038-00	CERAMIC CHIP 0.1MF		25V
C561	1-163-038-00	CERAMIC CHIP 0.1MF		25V
C562	1-164-346-11	CERAMIC CHIP 1MF		16V
C601	1-164-346-11	CERAMIC CHIP 1MF		16V
C604	1-163-117-00	CERAMIC CHIP 100PF	5%	50V
C605	1-163-117-00	CERAMIC CHIP 100PF	5%	50V
C607	1-163-117-00	CERAMIC CHIP 100PF	5%	50V
C801	1-164-346-11	CERAMIC CHIP 1MF		16V
C802	1-163-105-00	CERAMIC CHIP 33PF	5%	50V
C803	1-163-105-00	CERAMIC CHIP 33PF	5%	50V
C804	1-164-346-11	CERAMIC CHIP 1MF		16V
C805	1-164-346-11	CERAMIC CHIP 1MF		16V
C806	1-164-346-11	CERAMIC CHIP 1MF		16V
C807	1-164-346-11	CERAMIC CHIP 1MF		16V
C808	1-163-105-00	CERAMIC CHIP 33PF	5%	50V
C809	1-164-005-11	CERAMIC CHIP 0.47MF		25V
C810	1-163-038-00	CERAMIC CHIP 0.1MF		25V
C811	1-126-603-11	ELECT CHIP 4.7MF	20%	35V
C812	1-163-105-00	CERAMIC CHIP 33PF	5%	50V
C814	1-164-346-11	CERAMIC CHIP 1MF		16V

Ref.No.	Part No.	Description
CN501	1-566-527-11	CONNECTOR, FPC (ZIF) 11P
CN502	1-566-521-11	CONNECTOR, FPC (ZIF) 5P
CN801	1-569-693-11	SOCKET, CONNECTOR(RECEPTACLE)
CN802	1-569-692-11	SOCKET, CONNECTOR (PLUG) 14P
CN803	1-569-030-11	CONNECTOR, FPC (ZIF) 21P
CN901	4-931-852-01	TERMINAL, BATTERY
CNJ302	1-568-758-11	JACK (HEADPHONES)
CNJ401	1-568-907-21	JACK, EXTERNAL POWER (DC IN 6V)
D301	8-719-421-21	DIODE MA8120-L
D302	8-719-421-21	DIODE MA8120-L
D401	8-719-975-33	DIODE RB110C
D402	8-719-975-40	DIODE RB411D
D403	8-719-951-22	DIODE IMN10
D404	8-719-975-40	DIODE RB411D
D405	8-719-421-15	DIODE MA8027-L
D407	8-719-400-18	DIODE MA152WK
D408	8-719-975-33	DIODE RB110C
D409	8-719-302-88	LED SEL2913K-D
D410	8-719-302-88	LED SEL2913K-D
D411	8-719-938-72	DIODE SB01-05CP
D412	8-719-104-34	DIODE 1S2836
D413	8-719-302-88	LED SEL2913K-D
D414	8-719-975-33	DIODE RB110C
D415	8-719-400-18	DIODE MA152WK
D416	8-719-400-18	DIODE MA152WK
D417	8-719-104-34	DIODE 1S2836
D418	8-719-938-72	DIODE SB01-05CP
D419	8-719-938-72	DIODE SB01-05CP
D420	8-719-400-18	DIODE MA152WK
D421	8-719-403-80	DIODE MA157
D501	8-719-938-72	DIODE SB01-05CP
D502	8-719-938-72	DIODE SB01-05CP
D503	8-719-938-72	DIODE SB01-05CP
D801	8-719-400-18	DIODE MA152WK
D802	8-719-400-18	DIODE MA152WK
D803	8-719-951-22	DIODE IMN10
D804	8-719-403-80	DIODE MA157
D805	8-719-403-80	DIODE MA157
D806	8-719-951-22	DIODE IMN10
D808	8-719-938-72	DIODE SB01-05CP
D809	8-719-400-18	DIODE MA152WK
D810	8-719-421-21	DIODE MA8120-L
D811	8-719-421-21	DIODE MA8120-L
D815	8-719-400-18	DIODE MA152WK
D816	8-719-400-18	DIODE MA152WK
D817	8-719-400-18	DIODE MA152WK
IC301	8-759-502-48	IC SM5840AS
IC302	8-759-148-30	IC UPD6376
IC303	8-759-991-27	IC BA3570F
IC401	8-759-995-27	IC MB3776APF
IC402	8-759-031-84	IC SC7S04F
IC403	8-759-994-55	IC RH5RC351A
IC501	8-752-033-55	IC CXA1271Q
IC502	8-752-033-54	IC CXA1272Q-Z
IC503	8-759-710-79	IC NJM2107F

Ref.No.	Part No.	Description
IC504	8-759-030-17	IC MPC1715FU
IC505	8-759-031-84	IC SC7S04F
IC601	8-752-332-38	IC CXD1125Q
IC602	8-752-323-65	IC CXK5816M-15L
IC801	8-752-814-90	IC CXP5086-616Q
IC802	8-759-982-77	IC BA10339F
IC803	8-759-998-45	IC BA3818F-SY
IC804	8-759-945-21	IC S-8052ANB-NE-S
J301	1-568-257-21	JACK (LINE OUT)
J801	1-568-257-11	JACK (REMOTE)
JR306	1-216-295-00	METAL GLAZE 0 5% 1/10W
JR307	1-216-295-00	METAL GLAZE 0 5% 1/10W
JR401	1-216-864-11	METAL GLAZE 0 5% 1/16W
JR402	1-216-864-11	METAL GLAZE 0 5% 1/16W
JR501	1-216-295-00	METAL GLAZE 0 5% 1/10W
JR502	1-216-295-00	METAL GLAZE 0 5% 1/10W
JR503	1-216-295-00	METAL GLAZE 0 5% 1/10W
JR801	1-216-864-11	METAL GLAZE 0 5% 1/16W
JR802	1-216-864-11	METAL GLAZE 0 5% 1/16W
L101	1-410-997-31	INDUCTOR CHIP 2.2UH
L102	1-410-997-31	INDUCTOR CHIP 2.2UH
L201	1-410-997-31	INDUCTOR CHIP 2.2UH
L202	1-410-997-31	INDUCTOR CHIP 2.2UH
L301	1-410-997-31	INDUCTOR CHIP 2.2UH
L302	1-410-997-31	INDUCTOR CHIP 2.2UH
L303	1-410-997-31	INDUCTOR CHIP 2.2UH
L304	1-410-997-31	INDUCTOR CHIP 2.2UH
L401	1-460-061-11	COIL (WITH CORE)
L402	1-412-029-11	INDUCTOR CHIP 10UH
L403	1-412-029-11	INDUCTOR CHIP 10UH
L404	1-412-039-51	INDUCTOR CHIP 100UH
L405	1-412-039-51	INDUCTOR CHIP 100UH
L406	1-412-029-11	INDUCTOR CHIP 10UH
L502	1-412-039-51	INDUCTOR CHIP 100UH
L504	1-412-039-51	INDUCTOR CHIP 100UH
L506	1-412-039-51	INDUCTOR CHIP 100UH
L508	1-412-039-51	INDUCTOR CHIP 100UH
L510	1-412-029-11	INDUCTOR CHIP 10UH
L801	1-410-997-31	INDUCTOR CHIP 2.2UH
L802	1-410-997-31	INDUCTOR CHIP 2.2UH
L803	1-410-997-31	INDUCTOR CHIP 2.2UH
L804	1-410-997-31	INDUCTOR CHIP 2.2UH
LCD1	1-809-047-11	DISPLAY PANEL, LIQUID CRYSTAL
M901	A-3133-413-A	MOTOR ASSY, CLV (SPINDLE MOTOR)
M902	X-4921-256-1	FEED MOTOR (SLED MOTOR)
Q101	8-729-921-72	TRANSISTOR 2SD1781K-R
Q103	8-729-921-92	TRANSISTOR 2SD1781K-R
Q201	8-729-921-72	TRANSISTOR 2SD1781K-R
Q203	8-729-921-72	TRANSISTOR 2SD1781K-R
Q301	8-729-921-72	TRANSISTOR 2SD1781K-R
Q302	8-729-921-72	TRANSISTOR 2SD1781K-R
Q401	8-729-923-36	TRANSISTOR 2SD1963-Q.R
Q402	8-729-926-71	TRANSISTOR 2SB1308-R
Q403	8-729-907-00	TRANSISTOR DTC114EU
Q404	8-729-926-71	TRANSISTOR 2SB1308-R
Q405	8-729-921-72	TRANSISTOR 2SD1781K-R
Q406	8-729-907-39	TRANSISTOR IMD2

Ref.No.	Part No.	Description
Q407	8-729-926-71	TRANSISTOR 2SB1308-R
Q408	8-729-903-10	TRANSISTOR FMW1
Q409	8-729-402-45	TRANSISTOR UN5212
Q410	8-729-907-00	TRANSISTOR DTC114EU
Q411	8-729-116-06	TRANSISTOR 2SK160-K6
Q412	8-729-921-84	TRANSISTOR 2SB1182F5-Q
Q413	8-729-402-45	TRANSISTOR UN5212
Q414	8-729-924-36	TRANSISTOR DTC143EU
Q415	8-729-904-87	TRANSISTOR 2SB1197K-R
Q416	8-729-920-71	TRANSISTOR 2SA1037K-QR
Q417	8-729-907-39	TRANSISTOR IMD2
Q418	8-729-403-42	TRANSISTOR XN1401
Q419	8-729-920-71	TRANSISTOR 2SA1037K-QR
Q420	8-729-903-10	TRANSISTOR FMW1
Q421	8-729-402-45	TRANSISTOR UN5212
Q426	8-729-905-15	TRANSISTOR DTC144WU
Q427	8-729-402-45	TRANSISTOR UN5212
Q501	8-729-402-90	TRANSISTOR XN4609
Q502	8-729-904-87	TRANSISTOR 2SB1197K-R
Q503	8-729-920-74	TRANSISTOR 2SC2412K-QR
Q504	8-729-920-74	TRANSISTOR 2SC2412K-QR
Q505	8-729-402-45	TRANSISTOR UN5212
Q506	8-729-907-39	TRANSISTOR IMD2
Q507	8-729-924-79	TRANSISTOR FMG8
Q801	8-729-907-39	TRANSISTOR IMD2
Q802	8-729-402-51	TRANSISTOR UN5112
Q803	8-729-402-16	TRANSISTOR XN4608
Q804	8-729-907-39	TRANSISTOR IMD2
Q805	8-729-402-51	TRANSISTOR UN5112
Q806	8-729-402-45	TRANSISTOR UN5212
Q807	8-729-921-72	TRANSISTOR 2SD1781K-R
Q808	8-729-402-51	TRANSISTOR UN5112
Q809	8-729-907-39	TRANSISTOR IMD2
Q810	8-729-402-51	TRANSISTOR UN5112
Q811	8-729-402-45	TRANSISTOR UN5212
Q812	8-729-402-45	TRANSISTOR UN5212
R101	1-216-649-11	METAL CHIP 820 0.50% 1/10W
R102	1-216-097-00	METAL GLAZE 100K 5% 1/10W
R106	1-216-053-00	METAL GLAZE 1.5K 5% 1/10W
R107	1-216-033-00	METAL GLAZE 220 5% 1/10W
R108	1-216-845-11	METAL GLAZE 100K 5% 1/16W
R109	1-216-073-00	METAL GLAZE 10K 5% 1/10W
R110	1-216-073-00	METAL GLAZE 10K 5% 1/10W
R111	1-216-053-00	METAL GLAZE 1.5K 5% 1/10W
R116	1-216-065-00	METAL GLAZE 4.7K 5% 1/10W
R117	1-216-001-00	METAL GLAZE 10 5% 1/10W
R201	1-216-649-11	METAL CHIP 820 0.50% 1/10W
R202	1-216-097-00	METAL GLAZE 100K 5% 1/10W
R206	1-216-053-00	METAL GLAZE 1.5K 5% 1/10W
R207	1-216-033-00	METAL GLAZE 220 5% 1/10W
R208	1-216-097-00	METAL GLAZE 100K 5% 1/10W
R209	1-216-073-00	METAL GLAZE 10K 5% 1/10W
R210	1-216-073-00	METAL GLAZE 10K 5% 1/10W
R211	1-216-053-00	METAL GLAZE 1.5K 5% 1/10W
R216	1-216-065-00	METAL GLAZE 4.7K 5% 1/10W
R217	1-216-001-00	METAL GLAZE 10 5% 1/10W
R301	1-216-057-00	METAL GLAZE 2.2K 5% 1/10W

Ref.No.	Part No.	Description			
R302	1-216-049-00	METAL GLAZE	1K	5%	1/10W
R303	1-216-065-00	METAL GLAZE	4.7K	5%	1/10W
R304	1-216-051-00	METAL GLAZE	1.2K	5%	1/10W
R305	1-216-121-00	METAL GLAZE	1M	5%	1/10W
R306	1-216-057-00	METAL GLAZE	2.2K	5%	1/10W
R307	1-216-121-00	METAL GLAZE	1M	5%	1/10W
R308	1-216-001-00	METAL GLAZE	10	5%	1/10W
R310	1-216-129-00	METAL GLAZE	2.2M	5%	1/10W
R311	1-216-013-00	METAL GLAZE	33	5%	1/10W
R312	1-216-809-11	METAL GLAZE	100	5%	1/16W
R401	1-216-055-00	METAL GLAZE	1.8K	5%	1/10W
R402	1-216-840-11	METAL GLAZE	39K	5%	1/16W
R403	1-216-033-00	METAL GLAZE	220	5%	1/10W
R404	1-216-055-00	METAL GLAZE	1.8K	5%	1/10W
R405	1-216-835-11	METAL GLAZE	15K	5%	1/16W
R406	1-216-054-00	METAL GLAZE	1.6K	5%	1/10W
R407	1-216-073-00	METAL GLAZE	10K	5%	1/10W
R408	1-216-158-00	METAL GLAZE	22	5%	1/8W
R409	1-216-037-00	METAL GLAZE	330	5%	1/10W
R410	1-216-081-00	METAL GLAZE	22K	5%	1/10W
R411	1-216-041-00	METAL GLAZE	470	5%	1/10W
R412	1-216-073-00	METAL GLAZE	10K	5%	1/10W
R413	1-216-097-00	METAL GLAZE	100K	5%	1/10W
R414	1-216-827-11	METAL GLAZE	3.3K	5%	1/16W
R415	1-216-049-00	METAL GLAZE	1K	5%	1/10W
R416	1-216-817-11	METAL GLAZE	470	5%	1/16W
R417	1-216-662-11	METAL CHIP	3K	0.50%	1/10W
R418	1-216-663-11	METAL CHIP	3.3K	0.50%	1/10W
R419	1-216-663-11	METAL CHIP	3.3K	0.50%	1/10W
R421	1-216-682-11	METAL CHIP	20K	0.50%	1/10W
R422	1-216-073-00	METAL GLAZE	10K	5%	1/10W
R423	1-217-806-11	METAL GLAZE	1	5%	1/8W
R424	1-217-806-11	METAL GLAZE	1	5%	1/8W
R425	1-216-825-11	METAL GLAZE	2.2K	5%	1/16W
R426	1-216-081-00	METAL GLAZE	22K	5%	1/10W
R427	1-216-675-11	METAL CHIP	10K	0.50%	1/10W
R428	1-216-017-00	METAL GLAZE	47	5%	1/10W
R429	1-216-025-00	METAL GLAZE	100	5%	1/10W
R430	1-216-748-11	METAL GLAZE	39K	5%	1/10W
R431	1-216-025-00	METAL GLAZE	100	5%	1/10W
R432	1-216-857-11	METAL GLAZE	1M	5%	1/16W
R433	1-216-049-00	METAL GLAZE	1K	5%	1/10W
R434	1-216-073-00	METAL GLAZE	10K	5%	1/10W
R435	1-216-092-00	METAL GLAZE	62K	5%	1/10W
R436	1-216-067-00	METAL GLAZE	5.6K	5%	1/10W
R437	1-216-814-11	METAL GLAZE	270	5%	1/16W
R438	1-216-100-00	METAL CHIP	130K	0.50%	1/10W
R439	1-216-041-00	METAL GLAZE	470	5%	1/10W
R440	1-216-034-00	METAL GLAZE	240	5%	1/10W
R441	1-216-801-11	METAL GLAZE	22	5%	1/16W
R442	1-216-081-00	METAL GLAZE	22K	5%	1/10W
R443	1-216-821-11	METAL GLAZE	1K	5%	1/16W
R502	1-216-073-00	METAL GLAZE	10K	5%	1/10W
R503	1-216-065-00	METAL GLAZE	4.7K	5%	1/10W
R505	1-216-073-00	METAL GLAZE	10K	5%	1/10W
R506	1-216-081-00	METAL GLAZE	22K	5%	1/10W
R507	1-216-071-00	METAL GLAZE	8.2K	5%	1/10W

Ref.No.	Part No.	Description			
R508	1-216-069-00	METAL GLAZE	6.8K	5%	1/10W
R509	1-216-073-00	METAL GLAZE	10K	5%	1/10W
R510	1-216-001-00	METAL GLAZE	10	5%	1/10W
R511	1-216-097-00	METAL GLAZE	100K	5%	1/10W
R512	1-216-073-00	METAL GLAZE	10K	5%	1/10W
R513	1-216-125-00	METAL GLAZE	1.5M	5%	1/10W
R514	1-216-109-00	METAL GLAZE	330K	5%	1/10W
R515	1-216-057-00	METAL GLAZE	2.2K	5%	1/10W
R516	1-216-077-00	METAL GLAZE	15K	5%	1/10W
R517	1-216-845-11	METAL GLAZE	100K	5%	1/16W
R519	1-216-095-00	METAL GLAZE	82K	5%	1/10W
R520	1-216-105-00	METAL GLAZE	220K	5%	1/10W
R521	1-216-081-00	METAL GLAZE	22K	5%	1/10W
R522	1-216-097-00	METAL GLAZE	100K	5%	1/10W
R523	1-216-065-00	METAL GLAZE	4.7K	5%	1/10W
R524	1-216-115-00	METAL GLAZE	560K	5%	1/10W
R525	1-216-073-00	METAL GLAZE	10K	5%	1/10W
R526	1-216-065-00	METAL GLAZE	4.7K	5%	1/10W
R527	1-216-683-11	METAL CHIP	22K	0.50%	1/10W
R528	1-216-103-00	METAL GLAZE	180K	5%	1/10W
R529	1-216-062-00	METAL GLAZE	3.6K	5%	1/10W
R530	1-216-059-00	METAL GLAZE	2.7K	5%	1/10W
R531	1-216-121-00	METAL GLAZE	1M	5%	1/10W
R532	1-216-683-11	METAL CHIP	22K	0.50%	1/10W
R533	1-216-073-00	METAL GLAZE	10K	5%	1/10W
R535	1-216-133-00	METAL GLAZE	3.3M	5%	1/10W
R536	1-216-095-00	METAL GLAZE	82K	5%	1/10W
R538	1-216-089-00	METAL GLAZE	47K	5%	1/10W
R539	1-216-121-00	METAL GLAZE	1M	5%	1/10W
R540	1-216-073-00	METAL GLAZE	10K	5%	1/10W
R541	1-216-047-00	METAL GLAZE	820	5%	1/10W
R542	1-216-101-00	METAL GLAZE	150K	5%	1/10W
R543	1-216-101-00	METAL GLAZE	150K	5%	1/10W
R544	1-216-057-00	METAL GLAZE	2.2K	5%	1/10W
R545	1-216-081-00	METAL GLAZE	22K	5%	1/10W
R546	1-216-748-11	METAL GLAZE	39K	5%	1/10W
R547	1-216-073-00	METAL GLAZE	10K	5%	1/10W
R548	1-216-065-00	METAL GLAZE	4.7K	5%	1/10W
R549	1-216-121-00	METAL GLAZE	1M	5%	1/10W
R550	1-216-057-00	METAL GLAZE	2.2K	5%	1/10W
R551	1-216-057-00	METAL GLAZE	2.2K	5%	1/10W
R552	1-216-061-00	METAL GLAZE	3.3K	5%	1/10W
R553	1-216-073-00	METAL GLAZE	10K	5%	1/10W
R554	1-216-105-00	METAL GLAZE	220K	5%	1/10W
R555	1-216-833-11	METAL GLAZE	10K	5%	1/16W
R556	1-216-825-11	METAL GLAZE	2.2K	5%	1/16W
R557	1-216-049-00	METAL GLAZE	1K	5%	1/10W
R559	1-216-093-00	METAL GLAZE	68K	5%	1/10W
R560	1-216-089-00	METAL GLAZE	47K	5%	1/10W
R561	1-216-089-00	METAL GLAZE	47K	5%	1/10W
R562	1-216-097-00	METAL GLAZE	100K	5%	1/10W
R563	1-216-099-00	METAL GLAZE	120K	5%	1/10W
R601	1-216-073-00	METAL GLAZE	10K	5%	1/10W
R602	1-216-097-00	METAL GLAZE	100K	5%	1/10W
R801	1-216-073-00	METAL GLAZE	10K	5%	1/10W
R802	1-216-081-00	METAL GLAZE	22K	5%	1/10W
R803	1-216-081-00	METAL GLAZE	22K	5%	1/10W

Ref.No.	Part No.	Description
R804	1-216-081-00	METAL GLAZE 22K 5% 1/10W
R805	1-216-089-00	METAL GLAZE 47K 5% 1/10W
R806	1-216-073-00	METAL GLAZE 10K 5% 1/10W
R807	1-216-109-00	METAL GLAZE 330K 5% 1/10W
R808	1-216-121-00	METAL GLAZE 1M 5% 1/10W
R809	1-216-121-00	METAL GLAZE 1M 5% 1/10W
R810	1-216-845-11	METAL GLAZE 100K 5% 1/16W
R811	1-216-025-00	METAL GLAZE 100 5% 1/10W
R812	1-216-121-00	METAL GLAZE 1M 5% 1/10W
R813	1-216-073-00	METAL GLAZE 10K 5% 1/10W
R814	1-216-661-11	METAL CHIP 2.7K 0.50% 1/10W
R815	1-216-097-00	METAL GLAZE 100K 5% 1/10W
R816	1-216-039-00	METAL GLAZE 390 5% 1/10W
R817	1-216-693-11	METAL CHIP 56K 0.50% 1/10W
R818	1-216-663-11	METAL CHIP 3.3K 0.50% 1/10W
R819	1-216-663-11	METAL CHIP 3.3K 0.50% 1/10W
R821	1-216-690-11	METAL CHIP 43K 0.50% 1/10W
R822	1-216-681-11	METAL CHIP 18K 0.50% 1/10W
R826	1-216-682-11	METAL CHIP 20K 0.50% 1/10W
R831	1-216-097-00	METAL GLAZE 100K 5% 1/10W
R832	1-216-097-00	METAL GLAZE 100K 5% 1/10W
R833	1-216-073-00	METAL GLAZE 10K 5% 1/10W
R834	1-216-073-00	METAL GLAZE 10K 5% 1/10W
R835	1-216-105-00	METAL GLAZE 220K 5% 1/10W
RV301	1-241-017-11	RES, VAR, CARBON 10K/10K (VOLUME)
RV401	1-241-066-11	RES, ADJ, METAL GRAZE 4.7K (CHARGE DET VOLTAGE)
RV402	1-241-068-11	RES, ADJ, METAL GRAZE 22K (+5V)
RV403	1-241-065-11	RES, ADJ, METAL GRAZE 2.2K (+3.6V)
RV501	1-241-068-11	RES, ADJ, METAL GRAZE 22K (TRACKING GAIN)
RV502	1-241-068-11	RES, ADJ, METAL GRAZE 22K (TRACKING BALANCE)
RV503	1-241-069-11	RES, ADJ, METAL GRAZE 47K (FOCUS BIAS)
RV504	1-241-064-11	RES, ADJ, METAL GRAZE 1K (PLL)
RV505	1-241-068-11	RES, ADJ, METAL GRAZE 22K (FOCUS GAIN)
RV801	1-241-067-11	RES, ADJ, METAL GRAZE 10K (BATTERY DISPLAY)
S301	1-570-386-21	SWITCH, SLIDE (BASS BOOST NORM MID MAX)
S401	1-570-953-11	SWITCH, PUSH (1 KEY)(PB 2 ON)
S801	1-570-909-21	SWITCH, TACTIL (REFLOW TYPE)(⏮)
S802	1-570-909-21	SWITCH, TACTIL (REFLOW TYPE)(■)
S803	1-570-909-21	SWITCH, TACTIL (REFLOW TYPE)(⏪)
S804	1-570-909-21	SWITCH, TACTIL (REFLOW TYPE)(⏩)

Ref.No.	Part No.	Description
S805	1-570-204-11	SWITCH, KEY BOARD (PLAY MODE)
S806	1-570-204-11	SWITCH, KEY BOARD (REMAIN/ENTER)
S807	1-571-860-11	SWITCH, SLIDE (RESUME OFF/ON HOLD)
S901	1-570-953-11	SWITCH, PUSH (1 KEY)(OPEN)
S902	1-570-771-11	SWICH, MICRO
X301	1-577-576-11	VIBRATOR, CRYSTAL (16.9344MHz)
X801	1-578-769-11	VIBLATOR, CERAMIC (3.58MHz)

ACCESSORY & PACKING MATERIAL

⚠1-465-265-11	(US).....ADAPTOR, AC (AC-64N (U))
⚠1-465-266-11	(Canadian)...ADAPTOR, AC (AC-64N (CA))
⚠1-465-267-11	(AEP).....ADAPTOR, AC (AC-64N (AE))
⚠1-465-269-11	(UK).....ADAPTOR, AC (AC-64N (UK))
⚠1-465-270-11	(AUS).....ADAPTOR, AC (AC-64N (AU))
⚠1-465-520-11	(E).....ADAPTOR, AC (AC-64N)(110-240V)
⚠1-465-520-21	(E).....ADAPTOR, AC (AC-64N)(100-240V)
⚠1-569-007-11	(E).....ADAPTOR, CONVERSION 2P
1-528-297-11	BATTERY PACK (BP-2EX)
1-555-658-21	CORD, CONNECTION
1-555-658-21	CORD, CONNECTION
1-555-658-21	CORD, CONNECTION
3-751-754-11	(Canadian,AEP,UK,E,AUS) ...MANUAL, INSTRUCTION
3-751-754-21	(US).....MANUAL, INSTRUCTION
3-751-754-41	(AEP).....MANUAL, INSTRUCTION
3-752-086-01	INSTRUCTION
*4-920-407-01	BAG, PROTECTION
*4-931-874-01	CUSHION (UPPER)
*4-931-875-01	(US,Canadian,E)...CUSHION (LOWER)
*4-931-879-01	(AEP,UK,AUS).....CUSHION (LOWER)
*4-931-877-01	(US,E).....INDIVIDUAL CARTON
*4-931-878-01	(Canadian).....INDIVIDUAL CARTON
*4-931-880-01	(AEP,UK,AUS)...INDIVIDUAL CARTON
4-931-885-11	STRAP, HAND
1-505-113-14	(Canadian)....HEADPHONE (WITH REMOTE CONTROL)
8-952-478-90	(E,AUS).....HEADPHONE MDR-E472 SET
8-953-307-90	(US,AEP,UK)...HEADPHONE MDR-A10D SET
X-4930-117-1	CASE ASSY, BATTERY

Note:	Note:
The components identified by mark ⚠ or dotted line with mark ⚠ are critical for safety. Replace only with part number specified.	Les composants identifiés par une marque ⚠ sont critiques pour la sécurité. Ne les remplacer que par une pièce portant le numéro spécifié.

9-955-835-11

Sony Corporation
General Audio Group

English
90H0289-1
Printed in Japan

Published by Customer Relations and Service Group