D-777

SERVICE MANUAL

Canadian Model
AEP Model
UK Model
E Model
Tourist Model

Model Name Using Similar Mechanism	NEW
CD Mechanism Type	CDM-777
Optical Pick-Up Name	DAX-01A

SPECIFICATIONS

System
Compact disc digital audio system
Laser diode properties
Material: GaAlAs
Wavelength: λ=780 nm
Emission duration: Continuous
Laser output: Less than 44.6 μW (measured at 200 mm away from the objective lens surface)
Error correction
Sony Super Strategy Cross Interleave Reed Solomon Code
D-A conversion
1-bit quartz time-axis control
Frequency response
20 - 20,000 Hz $^{+0}_{-2}$ dB (measured by EIAJ CP-307)
Output (at 4.5 V input level)
Headphones (stereo minijack)
10mW+10mW at 16 ohms
Line output (stereo minijack)
Output level 0.7 V rms at 47 kilohms
Recommended load impedance over 10 kilohms

General
Power requirements
- Rechargeable batteries
- Two LR6 (size AA) batteries: 3 V DC
- AC power adaptor (DC IN 4.5 V jack):
  220 - 230 V, 50 Hz (AEP model)
  120 V, 60 Hz (Canadian model)
  230 - 240V, 50Hz (U.K. model)
  100 - 240 V, 50/60 Hz (Model for other countries)

Dimensions (w/h/d) (incl. projecting parts and controls)
Approx. 131 x 19.8 x 131.7 mm
(5 ¼ x 25/32 x 5 ¼ in.)
Mass (incl. rechargeable batteries)
Approx. 225 g (7.9 oz)
Operating temperature
5°C - 35°C (41°F - 95°F)

Supplied accessories
AC power adptor (1)
Rechargeable battery (2)
Connecting cord (Phono plug × 2 ↔ stereo miniplug)* (1)
Stereoheadphones with remote control (1)
Battery case (1)
Carrying case (1)
*Not supplied with world model

Design and specifications are subject to change without notice.

COMPACT DISC COMPACT PLAYER

SONY®

TABLE OF CONTENTS

Section	Title	Page
Specifications		1
1.	GENERAL	3
2.	DISASSEMBLY	6
3.	SERVICE NOTE	8
4.	SERVICE MODE	9
5.	ELECTRICAL ADJUSTMENTS	10
6.	DIAGRAMS	
6-1.	Block Diagram	13
6-2.	Printed Wiring Boards	15
6-3.	Schematic Diagram	19
6-4.	IC Pin Function Description	27
7.	EXPLODED VIEWS	29
8.	ELECTRICAL PARTS LIST	32

Flexible Circuit Board Repairing

- Keep the temperature of the soldering iron around 270 °C during repairing.
- Do not touch the soldering iron on the same conductor of the circuit board (within 3 times).
- Be careful not to apply force on the conductor when soldering or unsoldering.

Notes on chip component replacement

- Never reuse a disconnected chip component.
- Notice that the minus side of a tantalum capacitor may be damaged by heat.

SAFETY-RELATED COMPONENT WARNING!!

COMPONENTS IDENTIFIED BY MARK ⚠ OR DOTTED LINE WITH MARK ⚠ ON THE SCHEMATIC DIAGRAMS AND IN THE PARTS LIST ARE CRITICAL TO SAFE OPERATION. REPLACE THESE COMPONENTS WITH SONY PARTS WHOSE PART NUMBERS APPEAR AS SHOWN IN THIS MANUAL OR IN SUPPLEMENTS PUBLISHED BY SONY.

ATTENTION AU COMPOSANT AYANT RAPPORT À LA SÉCURITÉ!

LES COMPOSANTS IDENTIFIÉS PAR UNE MARQUE ⚠ SUR LES DIAGRAMMES SCHÉMATIQUES ET LA LISTE DES PIÈCES SONT CRITIQUES POUR LA SÉCURITÉ DE FONCTIONNEMENT. NE REMPLACER CES COMPOSANTS QUE PAR DES PIÈCES SONY DONT LES NUMÉROS SONT DONNÉS DANS CE MANUEL OU DANS LES SUPPLÉMENTS PUBLIÉS PAR SONY.

This Compact Disc player is classified as a CLASS 1 LASER product.
The CLASS 1 LASER PRODUCT label is located on the bottom exterior.

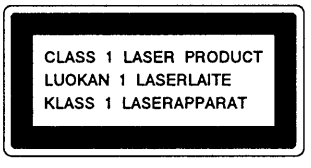

CAUTION

Use of controls or adjustments or performance of procedures other than those specified herein may result in hazardous radiation exposure.

This section is extracted from instruction manual.

SECTION 1
GENERAL

Playing a CD right away!

If you want to play a CD right now, choose to use your Discman on house current. Other choices are the following two: rechargeable batteries and dry batteries (see "Power Sources" on the reverse side).

1 Connect

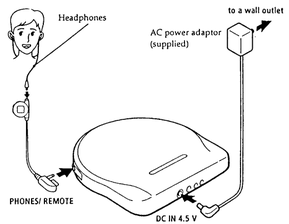

For models supplied with the AC plug adaptor
If the AC power adaptor does not fit the wall outlet, use the AC plug adaptor.

Notes
- The type of the headphones shown may not be the same as your headphones.
- Connect the headphones to the remote control firmly. A loose connection may cause noise during playback.

2 Place a CD

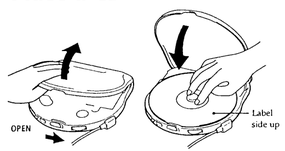

① Slide OPEN and open the lid.
② Fit the CD to the pivot.

3 Play

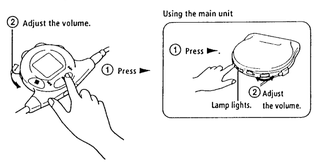

To stop play, press ■.

To	Press
Find the beginning of the current track (AMS*)	⏮ side of ► once
Find the beginning of previous tracks (AMS)	⏮ side repeatedly
Find the beginning of the next track (AMS)	⏭ side once
Find the beginning of succeeding tracks (AMS)	⏭ side repeatedly
Go forward quickly	Hold down ⏭ side
Go backwards quickly	Hold down ⏮ side

*AMS = Automatic Music Sensor

To remove the CD
Remove the CD while pressing the pivot.

Notes on display on remote control
- When you press ► (when RESUME is set to OFF), the total number of the tracks in the CD and the total playing time appear for 2 seconds.
- During play, the track number and the elapsed playing time of the current track appear.
- Between tracks, the time to the beginning of the next track will appear with the minus "-" indication.

Note on controlling the volume with the remote control
Set the VOLUME control on the remote control to MAX. Then adjust the volume on the Discman to the level that you want to be the maximum for adjusting the volume with the remote control.

Notes on handling CDs
- To keep the CD clean, handle it by its edge. Do not touch the surface.
- Do not stick paper or tape onto the CD.
- Do not expose the CD to direct sunlight or heat sources such as hot air ducts. Do not leave the CD in a car parked in direct sunlight.

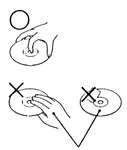
Not these ways

►Other Operations

Playing tracks repeatedly (Repeat Play)

You can play tracks repeatedly in normal, INTRO PGM and shuffle play modes. Repeat all the tracks or only one track.

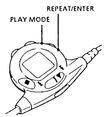

To repeat all the tracks
Press REPEAT/ENTER during play.
The "⇄" indication appears.

To cancel repeat play, press REPEAT/ENTER again.

To repeat a single track
1 Press REPEAT/ENTER while the track you want to repeat is playing.
The "⇄ " indication appears.

2 Press PLAY MODE repeatedly until "1" appears.

To repeat another track, press ⏮ or ⏭ side of ►.

To cancel repeat play, press REPEAT/ENTER again.

Playing only the tracks you want (INTRO PGM Play)

You can choose and play your favorite tracks by scanning through the beginning of each track in a CD.

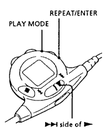

1 During play, press PLAY MODE repeatedly until "INTRO PGM" flashes.

Flashing slowly

2 Press REPEAT/ENTER to start scanning.
The Discman plays the first 15 seconds of each track and "INTRO PGM" flashes faster.

3 Press REPEAT/ENTER while the track you want is playing. To skip the track, press ⏭ side of ► or just wait for the next track.

When you go through the CD, "INTRO PGM" stops flashing and the tracks you chose play automatically.

To cancel INTRO PGM play, press PLAY MODE until no play mode is indicated in the display.

Playing tracks in random order (Shuffle Play)

You can play the tracks in a CD in random order.

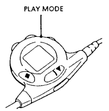

During play, press PLAY MODE repeatedly until "SHUF" appears.
The tracks play in random order.

To cancel shuffle play, press PLAY MODE repeatedly until no play mode is indicated in the display.

Note
- During shuffle play, you cannot return to previous tracks by pressing ⏮ side of ►.

Using other functions

To enjoy more powerful bass sound
You can enjoy a powerful bass-boosted sound.

Press BASS BOOST to select BASS ▰ or BASS ▰▰. BASS ▰▰ is more effective.

Note
- If the sound is distorted when emphasizing bass, turn down the volume.

To prevent sound from skipping (ESP)
The ESP (Electronic Shock Protection) function prevents the sound from skipping by using a buffer memory that stores music data for about 10 seconds. Use this function when listening during a walk or playing in a car.

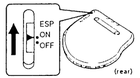

Set ESP to ON.
The ESP indication appears.

Notes
- Playing may stop when the Discman gets a strong shock even with the ESP function on.
- When you record a CD on a cassette tape using a tape recorder that has a blank search function, set ESP to OFF.
- If you hear a noise or sound skip when:
  – listening to a dirty or scratched CD,
  – listening to an audio test CD or,
  – the Discman receives continuous shock, set ESP to OFF.
- Sound may skip if you set ESP to ON during play.

To lock the buttons
You can lock your Discman against any accidental operations.

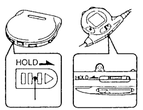

To avoid accidental operation of the main unit, slide HOLD on the main unit in the direction of the arrow.
When you press any button, the HOLD lamp flashes.

To avoid accidental operation of the remote control, slide HOLD on the remote control in the direction of the arrow.
When you press any button, "Hof d" appears in the display.

To unlock, slide HOLD back.

To protect your hearing (AVLS)
The AVLS (Automatic Volume Limiter System) function keeps down the maximum volume to protect your ears.

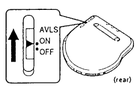

Set AVLS to ON.

Note
- If the sound is distorted when you listen to the bass-boosted sound with the AVLS function, turn down the volume.

Continue to the reverse side →

To resume playing from the point you stopped the CD (Resume Play)
Normally, every time you stop and play, playing starts from the beginning of the CD. The resume play function, however, lets you listen to from the point at which you last turned off the Discman.

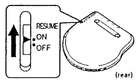

Set RESUME to ON.

To cancel resume play, set RESUME to OFF.

Notes
- Even if RESUME is set to ON, playing starts from the beginning when you open the lid.
- The resume point may be inaccurate by about 30 seconds.

To turn off the beep
You can turn off the beep that sounds as you operate your Discman.

While you press and hold down ■, connect the power source.

Connecting to other stereo equipment

You can listen to the CD through other stereo equipment or record a CD on a cassette tape. Refer to the instruction manual of other equipment for details. Before making connections, turn off each equipment.

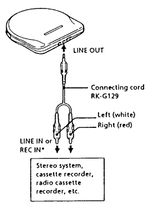

*To connect an equipment without LINE IN nor REC IN jack, use the RK-G134 connecting cord and connect to MIC jack.

Note
- Before you play the CD, turn down the volume of the connected equipment so as not to damage the connected speakers.

►Power Sources

Using rechargeable batteries

Charge the rechargeable batteries before using them for the first time.

1 Open the lid of the main unit, and then open the lid of the battery compartment.

2 Insert the rechargeable batteries as illustrated inside the battery compartment, and close the lid. (Be sure to close it firmly, or the CD may be damaged.) Then close the lid of the main unit.

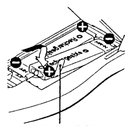
Put the end of the ribbon inside. (To remove the battery, pull the ribbon.)

3 Connect the AC power adaptor as illustrated below.

4 Press CHARGE.
Charging starts and the CHARGE lamp on the main unit flashes. When the batteries have been fully charged, the CHARGE lamp goes off.
Charging takes about 3 hours at the maximum.

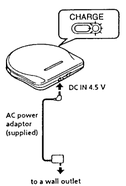

5 When fully charged, disconnect the AC power adaptor.

When to charge the batteries
When the batteries become weak, ⌂ in the display on the remote control flashes.
When the batteries are used up, ⌂ stops flashing and lights up. Charge the rechargeable batteries.

Battery life (approx. hours)*

When	Time
Playing with ESP off	5
Playing with ESP on	4

*When you use the Discman on a flat and stable place.

Notes
- Charging time varies depending on how the rechargeable batteries are used.
- If the battery is new or has not been used for a long time, it may not be charged completely until you charge and discharge it three or four times.
- If the battery life reduces by about half, replace it with Sony NH-9WM rechargeable battery. Do not use any other rechargeable battery.

Using dry batteries

1 Hook the battery case onto the Discman and fasten the screw.

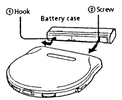

2 Open the lid of the battery case.

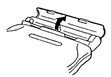

3 Insert two LR6 (size AA) alkaline batteries by matching the ⊕ and ⊖ to the diagram inside the battery case and close the lid.

When to replace the dry batteries
When the batteries become weak, ⌂ in the display on the remote control flashes.
When ⌂ stops flashing and lights up, replace all the batteries with the new ones.

For extended use
Insert the rechargeable batteries and also attach the battery case.
For the battery life, see the following table.

Battery life (approx. hours)*

When using	ESP function off	on
Two dry batteries	9	7
Rechargeable batteries and two dry batteries	14	11

*When you use the Discman on a flat and stable place with alkaline batteries.

Notes
- Do not charge the dry batteries.
- Do not mix new batteries with old ones.
- Do not use different types of batteries together.

SECTION 2
DISASSEMBLY

Note: Follow the disassembly procedure in the numerical order given.

BOTTOM PANEL

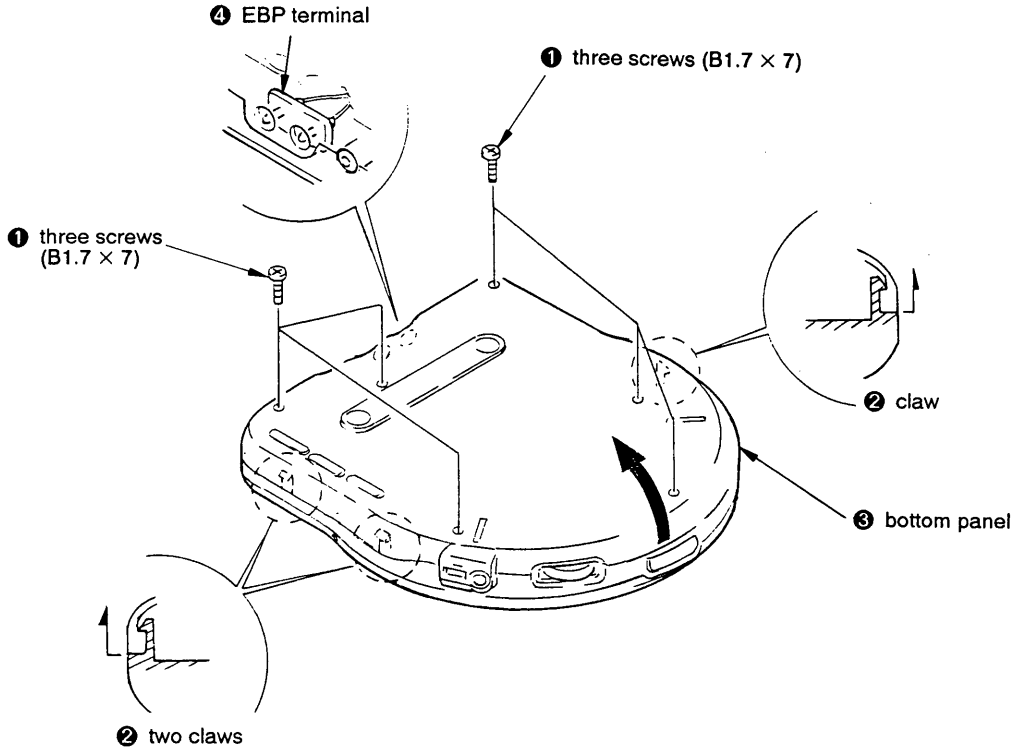

HOW TO THE MAIN BOARD

Meet respective positions of S301, S805, and S807 on the MAIN board with the knob (AVLS), knob (RESUME), and knob (ESP) on the bottom panel.

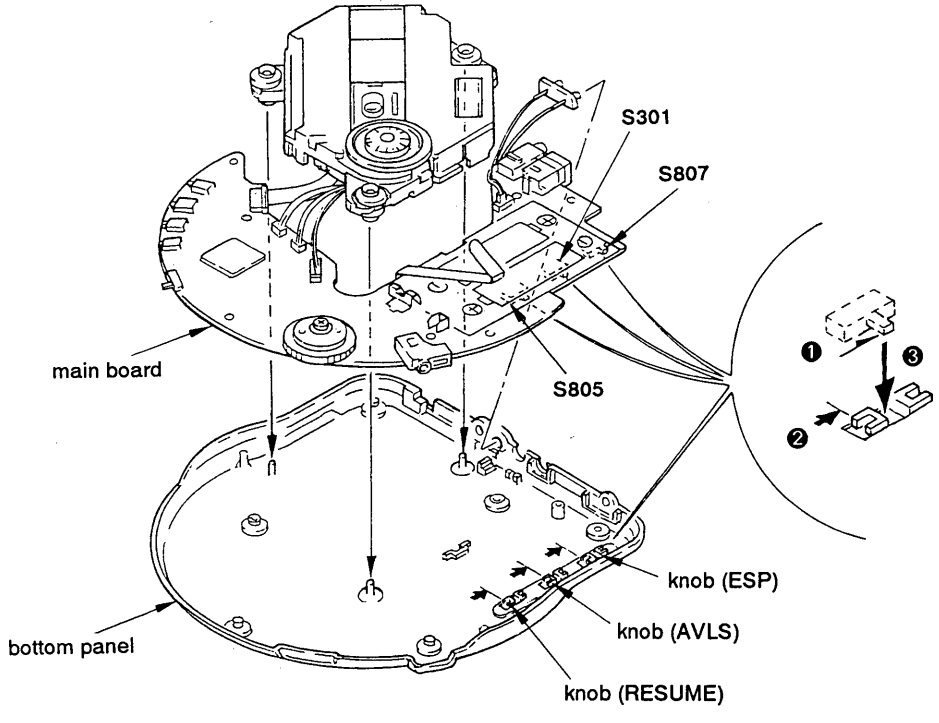

HOW TO THE CABINET

Meet the position of S806 on the MAIN board with the knob (HOLD) on the cabinet.

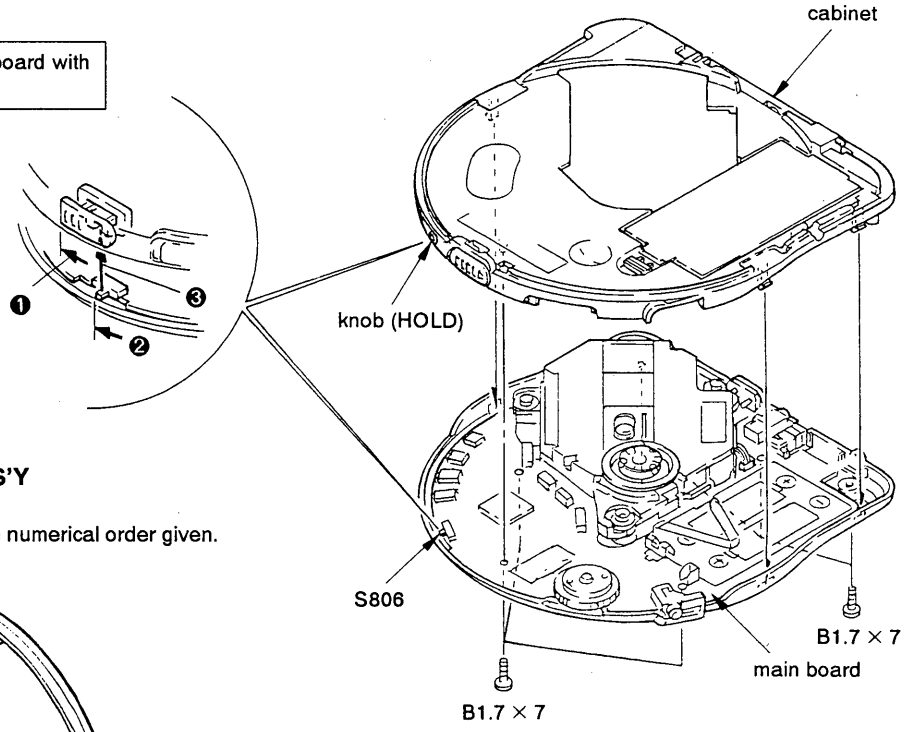

HOW TO THE UPPER PANEL ASS'Y

Note: Follow the assembly procedure in the numerical order given.

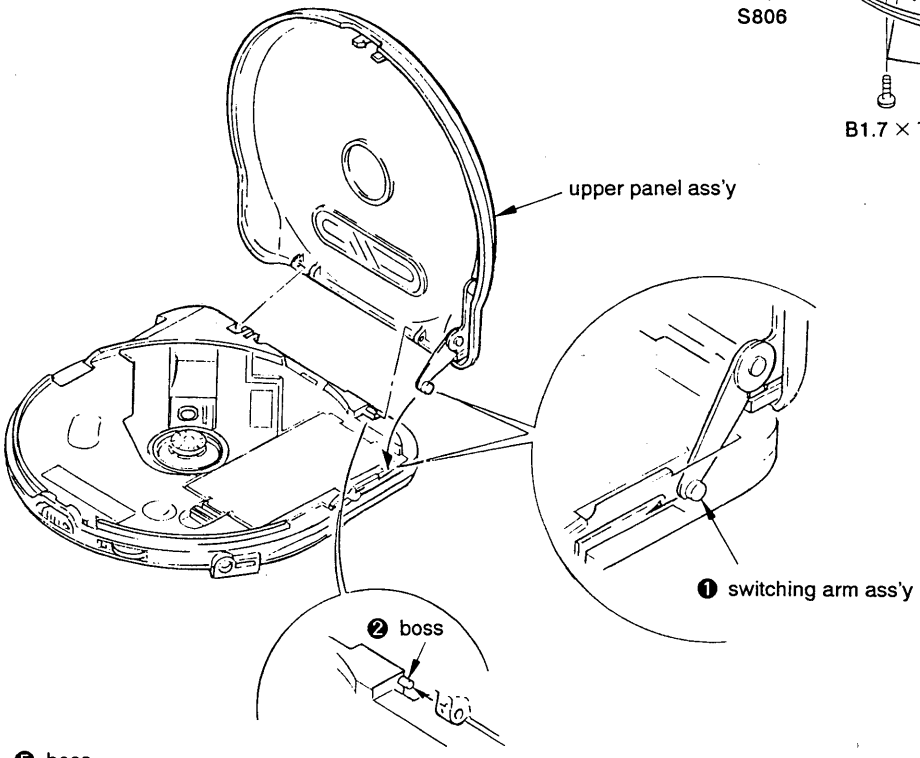

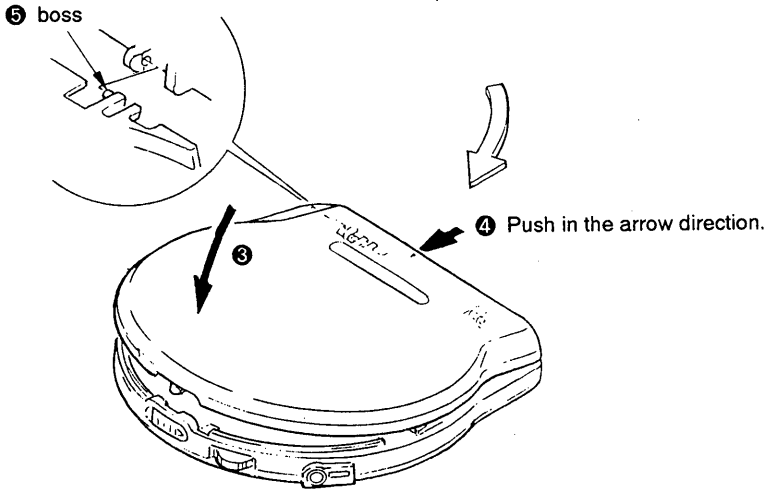

SECTION 3
SERVICE NOTE

NOTES ON HANDLING THE OPTICAL PICK-UP BLOCK OR BASE UNIT

The laser diode in the optical pick-up block may suffer electrostatic breakdown because of the potential difference generated by the charged electrostatic load, etc. on clothing and the human body.
During repair, pay attention to electrostatic breakdown and also use the procedure in the printed matter which is included in the repair parts.
The flexible board is easily damaged and should be handled with care.

NOTES ON LASER DIODE EMISSION CHECK

The laser beam on this model is concentrated so as to be focused on the disc reflective surface by the objective lens in the optical pick-up block. Therefore, when checking the laser diode emission, observe from more than 30 cm away from the objective lens.

Before Replacing the Optical Pick-Up Block

Please be sure to check thoroughly the parameters as par the "Optical Pick-Up Block Checking Procedures" (Part No.: 9-960-027-11) issued separately before replacing the optical pick-up block.
Note and specifications required to check are given below.

- FOK output: IC501 ⑫ pin
  When checking FOK, remove the lead wire to disc motor.
- S curve P-to-P value: 2.5 Vp-p
  When checking S curve P-to-P value, remove the lead wire to disc motor.
- Adjusted part for focus gain adjustment: RV503
- RF signal P-to-P value: 0.8 − 1.3 Vp-p
- Traverse signal P-to-P value: 1 − 2.6 Vp-p
- The repairing grating holder is impossible.
- Adjusted part for tracking gain adjustment: RV504

Precautions for Checking Emission of Laser Diode

Laser light of the equipment is focused by the object lens in the optical pick-up so that the light focuses on the reflection surface of the disc. Therefore, be sure to keep your eyes more then 30 cm apart from the object lens when you check the emission of laser diode.

Laser Diode Checking Methods

During normal operation of the equipment, emission of the laser diode is prohibited unless the upper panel is closed while turning ON the S809 (push switch type).
The following two checking methods for the laser diode are operable.

- **Method-1 (In the service mode or normal operation): Emission of the laser diode is visually checked.**

1. Open the upper panel.
2. Push the S809 as shown in Fig. 1.
3. Check the object lens for confirming normal emission of the laser diode. If not emitting, there is a trouble in the automatic power control circuit or the optical pick-up.
   During normal operation, the laser diode is turned ON about 2.5 seconds for focus searching.

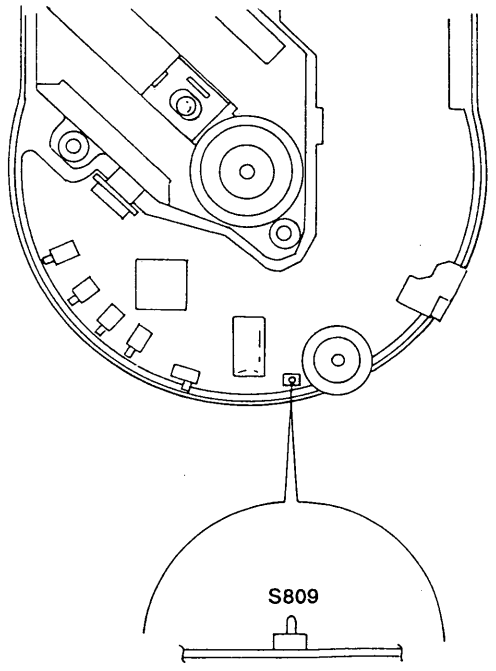

Fig. 1 Method to push the S809

SECTION 4
SERVICE MODE

Service Mode (Service program)

The equipment is provided with a service program built in the microcomputer, like conventional models.
Service program operation methods are described in the following.
*Operation is all controlled by the remote commander.

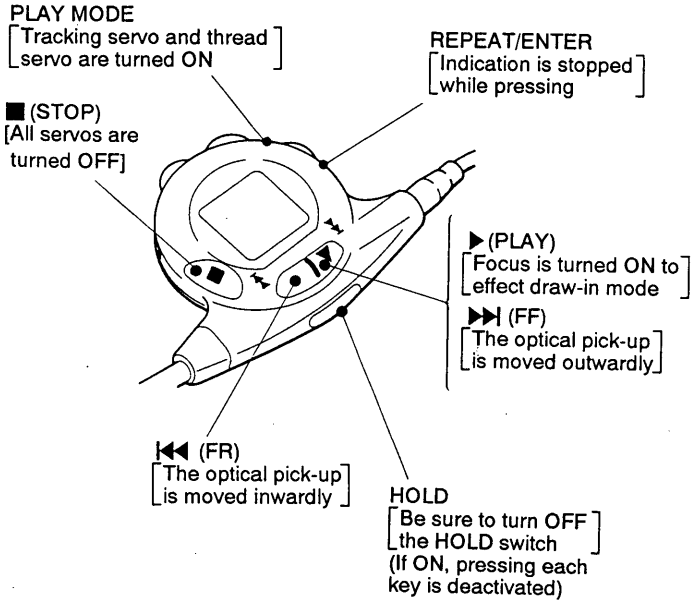

Fig. 2 Layout of each key

- **Step 1 (Service mode setting methods)**

1. Turn OFF the HOLD switch with external power supply disconnected (power is not applied to the set).
2. Solder across the TEST (TP4) terminals (pin ⑲ , IC801 (TEST) is grounded).
3. Connect an external power supply.

   Thus, the set is switched to the service mode.

- **Step 2 (Operation in the service mode)**

1. Once the service mode is effected, the LCD displays 5 indications each of which is repeatedly displayed.
   However, the following operations can be activated even if LCD indication is effected.
2. By pressing the REPEAT/ENTER key, all indications light up.
   With the key released, repeated indication is continued, so you can check each segment.
3. When continuously pressing the ▶ (▶▶|) or |◀◀ key on the remote commander, the optical pick-up is movable inwardly or outwardly. However, if this is activated, tracking servo and sled servo are turned OFF. After the optical pick-up moves, without disc, focus searching is repeated continuously.
   If a disc has been loaded,, focus is turned ON from focus searching while entering CLV-S (pull-in mode).
4. By pressing the PLAY MODE key, tracking servo, sled servo and CLV-A (servo in PLAY) are turned ON.
5. When 4. are performed, playing begins. No muting is ON in the service mode.
6. By pressing the ■ key, all servos (focus, tracking and sled) are turned OFF. However, the disc motor revolves for a while by inertia.

- **Step 3 (Resetting of service mode)**

1. Be sure to disconnect the external power supply and remove the solder bridge at the TEST (TP4) terminals connected before in setting.
2. The set thus becomes available for normal operation.

– MAIN BOARD – (Side A)

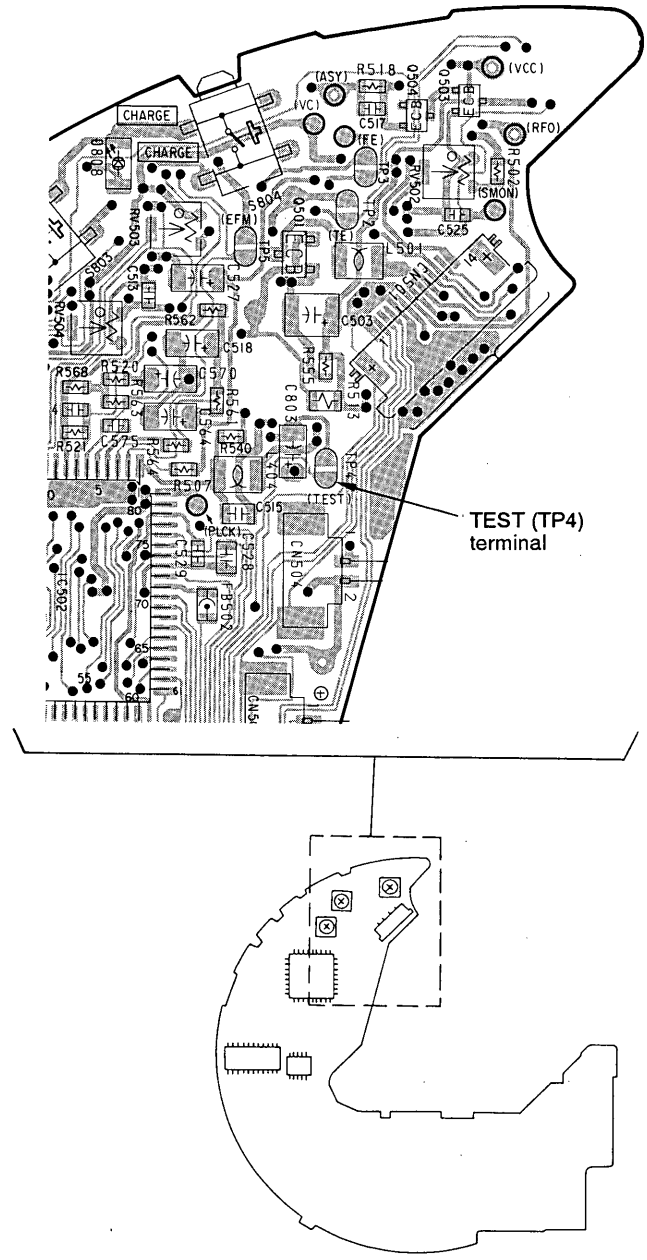

Fig. 3 Location of Test terminal

SECTION 5
ELECTRICAL ADJUSTMENTS

Precautions for Adjustment

1. Before beginning tracking balance adjustment, set the equipment to service mode.
   After the completion of adjustment, be sure to reset the service mode.
   For more information, see "Service Mode (service program)" on page 9.
2. Perform adjustments in the order given.
3. Use YEDS-18 disc (Part No.: 3-702-101-01) unless otherwise indicated.
4. Power supply voltage requirement.: DC4.5 V
   HOLD switch : OFF
   VOLUME switch : Minimum
   BASS BOOST switch : NORM
   ESP switch : OFF
   AVLS switch : OFF
5. For adjustment, the remote comcommander is required.

Before Beginning Adjustment

Set the equipment to service mode (See page 9) and check the following. If there is an error, repair the equipment.

• Checking of the sled motor

1. Open the upper panel.
2. When continuously pressing ▶ (▶▶I) or I◀◀ key on the remote commander, and check that the optical pick-up can move smoothly without sluggishness or abnormal noise in innermost periphery → outermost periphery → innermost periphery. (At this time, the PLAY status is active.)
   ▶ (▶▶I) key on the remote commander: The optical pick-up moves outwardly.
   I◀◀ key on the remote commander: The optical pick-up moves inwardly.

• Checking of focus searching

1. Open the upper panel.
2. Press the ▶ (▶▶I) key on the remote commander. (Focus searching operation is activated continuously.)
3. Check the object lens of the optical pick-up for smooth up/down motion without sluggishness or abnormal noise.
4. Press the ■ key.
   Check that focus searching operation is deactivated. If not, again press the ■ key slightly longer.

Tracking Balance Adjustment

Condition:

- Hold the set in horizontal state.

Adjustment Procedure:

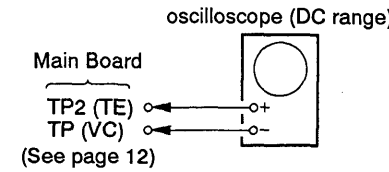

1. Connect the oscilloscope to TP2 (TE) of the main board.
2. Set the equipment to service mode stop state. (See page 9.)
3. Put the disc (YEDS-18).
4. When continuously pressing ▶ (▶▶I) or I◀◀ key on the remote commander and move the optical pick-up. At this time, the CLV-S (pull-in mode) is activated. (Tracking servo and sled servo are turned off.)
5. Adjust RV502 so that the waveform on the oscilloscope becomes up/down symmetrical with an axis of 0 V.

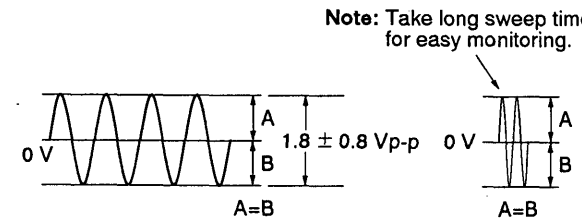

7. Stop removing of the disc motor by pressing the ■ key.
8. After the completion of adjustment, reset service mode. (See page 9.)

Adjustment Location: Main Board (Side A)

Focus/Tracking Gain Adjustment

A servo analayzer is necessary in order to perform this adjustment exactly.

> However, this gain has a margin, so even if it is slightly off, there is no probrem. Therefore, do not perform this adjustment.

Focus/tracking gain determines the pick-up follow-up relative to mechanical noise and mechanical shock when the 2-axis device operates. However, as these reciprocate, the adjustment is at the point where both are satisfied.

- When gain is rased, the noise when 2-axis device operates increase.
- When gain is lowered, it is more susceptible to mechanical shock and skipping occurs more easily.

This adjustment has to be performed upon replacing any of the following parts.

- Optical pick-up
- RV503 (Focus gain VR)
- RV504 (Tracking gain VR)

> Normally, be sure not to move RV503 (focus gain VR) and RV504 (tracking gain VR).

Adjustment method:

– Focus Gain Adjustment –

This adjustment is not performed.
If focus gain VR RV503 is turned, set to mechanical center.

– Tracking Gain Adjustment –

(perform at normal operation)

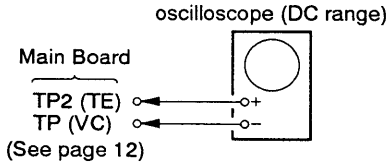

1. Place the optical pick-up level, horizontally. (If the optical pick-up is not level, the 2-axis device will be weighted and adjustment cannot be done.)
2. Connect the osilloscope to TP2 (TE) and TP (VC) on main board.
3. Set the disc (YEDS-18) and press the ▶ (▶▶I) key.
4. Turn RV504 slightly clockwise (tracking gain drops) and obtain a waveform with a fundamental wave (waveform has large waves) as in Figure 1.
5. Turn RV504 slowly counterclockwise (tracking gain rises) until the fundemental wave disappears (no large waves) as in Figure 2.
6. Set RV504 to the position about 30 ° counterclockwise form the position obtained in step 5. If RV504 contact point is more than 90 ° counterclockwise from mechanical center, tracking gain is too high. In this case, readjust from step 4.
7. Press ▶ (▶▶I) or I◀◀ key and observe the 100 track jump waveform. Check that no traverse waveform appears for both ▶ (▶▶I) or I◀◀ directions. (See Figures 3 and 4.) It is acceptable if the traverse waveform appears only now and then, but if it appears constantly, raise tracking gain slightly and check step 7 again.
8. Check that there is not abnormal amount of operation noise (white noise) from the 2-axis device. If there is, tracking gain is too high, readjust starting with step 4.

The waveforms are those measured with the oscilloscope set as shown below.

- VOLT/DIV: 0.2 V
- TIME/DIV: 5 ms

- Waveform when tracking gain is lowered.
  Fundamental wave appears (large waves).

Fig. 1

- Waveform when fundamental wave disappears (no large waves).

Fig. 2

- Waveform with no traverse waveform during 100 track jump. (Brake application is smooth because of adjustment.)

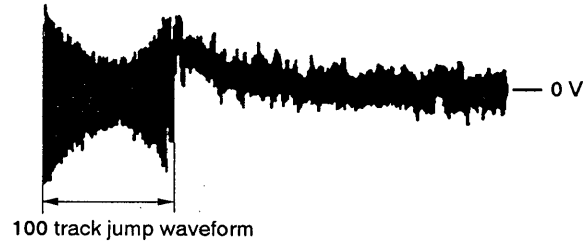

Fig. 3

- Waveform with traverse waveform during 100 track jump.
  (Brake application is poor because of adjustment.)

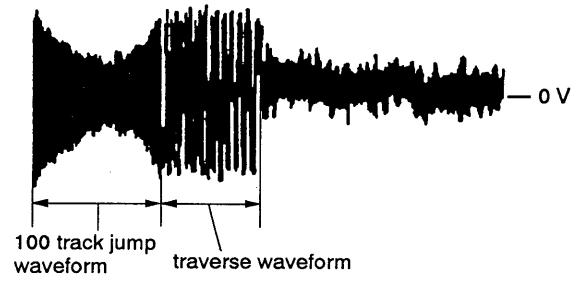

Fig. 4

Connection and Adjustment Location:

– MAIN BOARD – (Side A)

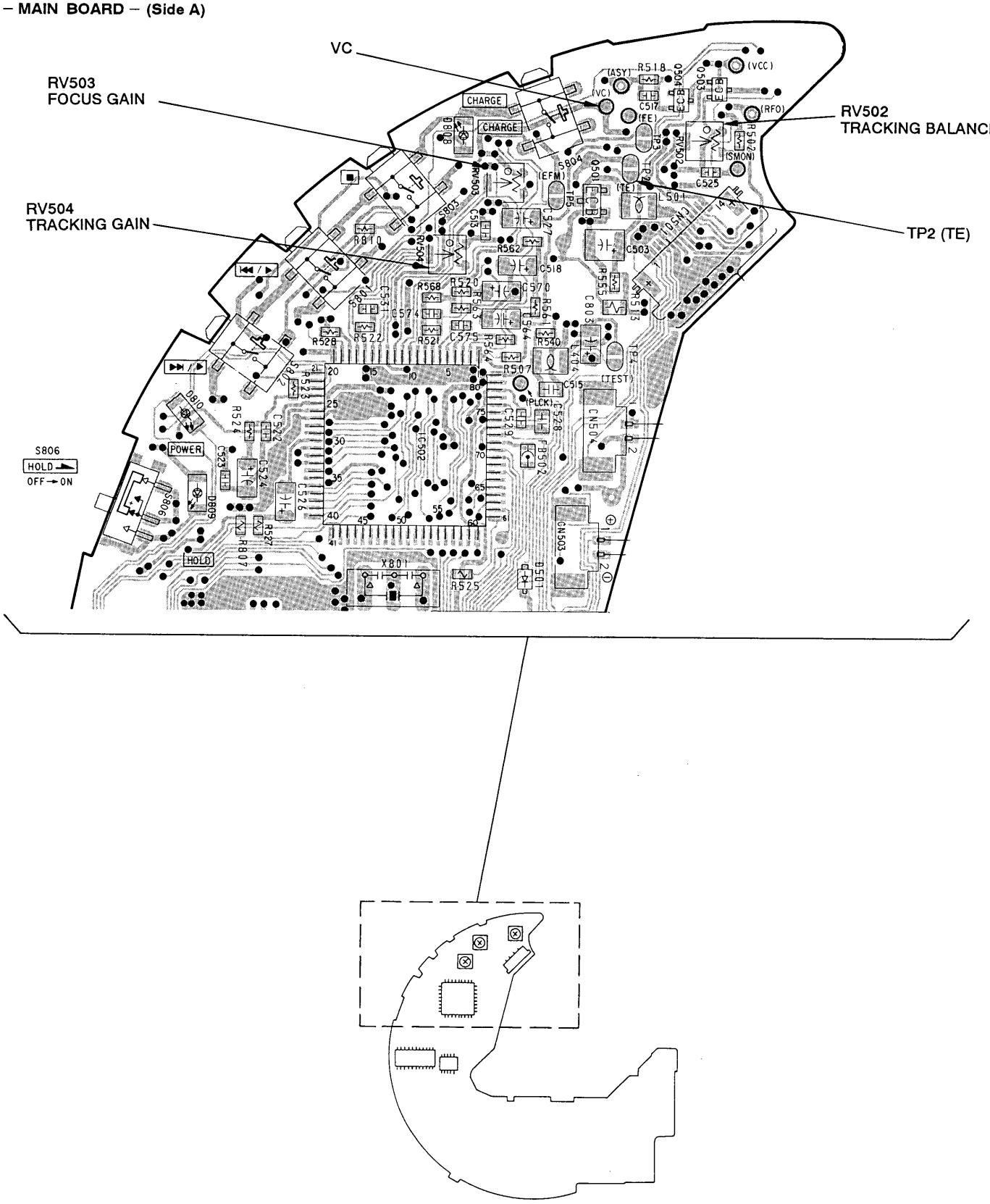

SECTION 6
DIAGRAMS

6-1. BLOCK DIAGRAM

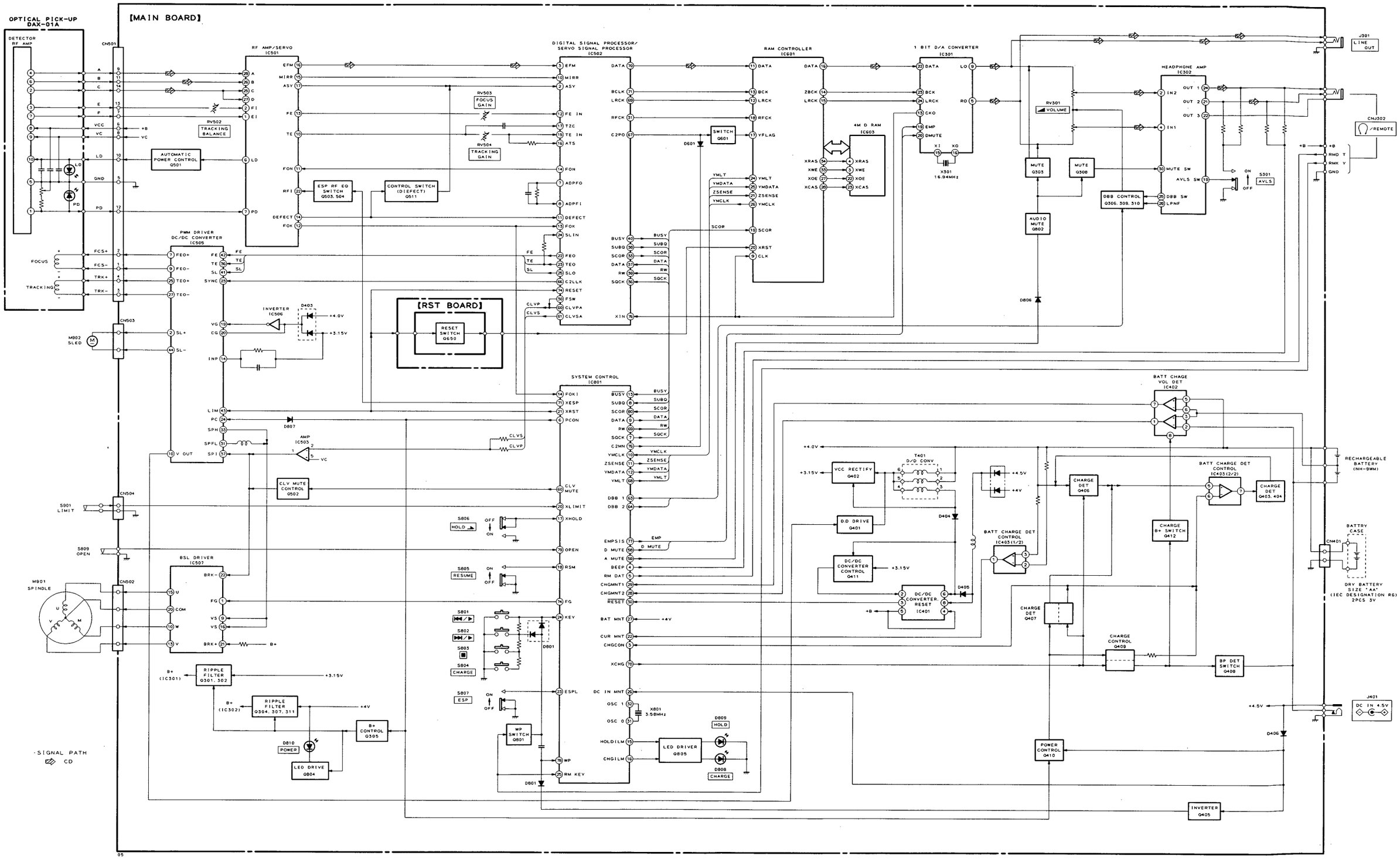

6-2. PRINTED WIRING BOARDS

• Semiconductor Location

Ref. No.	Location	Ref. No.	Location
D301	G-10	Q301	G-21
D302	G-11	Q302	G-21
D303	I-21	Q303	F-2
D304	I-20	Q304	H-3
D305	H-2	Q305	I-15
D306	I-20	Q306	H-21
D401	F-13	Q307	G-3
D402	H-15	Q308	H-2
D403	J-17	Q309	I-21
D404	I-19	Q310	H-21
D405	I-15	Q311	G-2
D406	I-14	Q401	G-21
D407	G-13	Q402	G-3
D408	H-13	Q403	H-14
D409	G-13	Q404	I-14
D501	E-4	Q405	I-14
D502	I-17	Q406	I-13
D503	J-17	Q407	I-14
D504	J-17	Q408	G-14
D601	E-20	Q409	I-14
D801	C-21	Q410	I-14
D803	J-19	Q411	I-15
D804	J-19	Q412	G-14
D805	J-19	Q501	B-5
D806	H-15	Q502	I-16
D807	I-15	Q503	A-5
D808	B-4	Q504	A-5
D809	D-2	Q511	B-20
D810	C-2	Q801	F-20
D811	C-3	Q850	D-9
		Q801	C-21
IC301	F-3	Q802	H-15
IC302	H-20	Q804	G-21
IC401	I-15	Q805	B-20
IC402	H-14		
IC403	H-13		
IC501	B-18		
IC502	D-3		
IC503	H-17		
IC505	I-18		
IC506	I-17		
IC507	H-16		
IC601	F-21		
IC603	F-2		
IC801	D-20		

Note:

- ○——— : parts extracted from the component side.
- ● : Through hole.
- △ : internal component.
- ▒ : Pattern from the side which enables seeing.

(The other layers' patterns are not indicated.)

Caution:	
Pattern face side: (Side B)	Parts on the pattern face side seen from the pattern face are indicated.
Parts face side: (Side A)	Parts on the parts face side seen from the parts face are indicated.

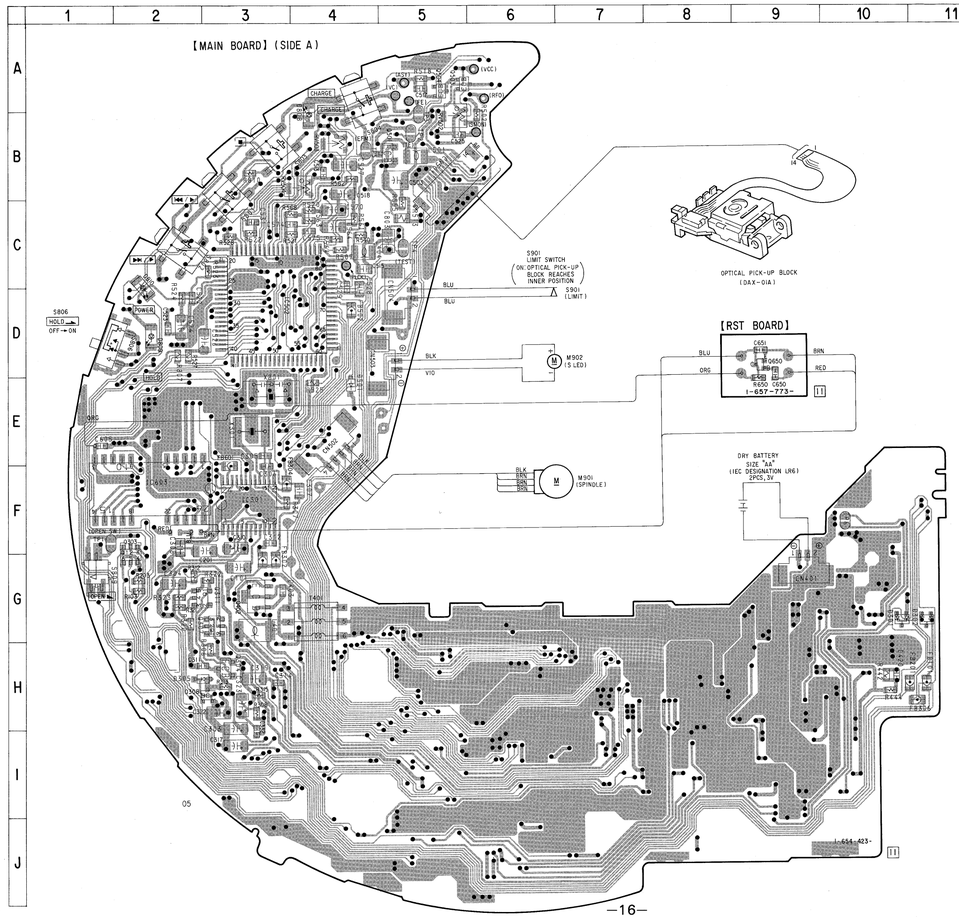

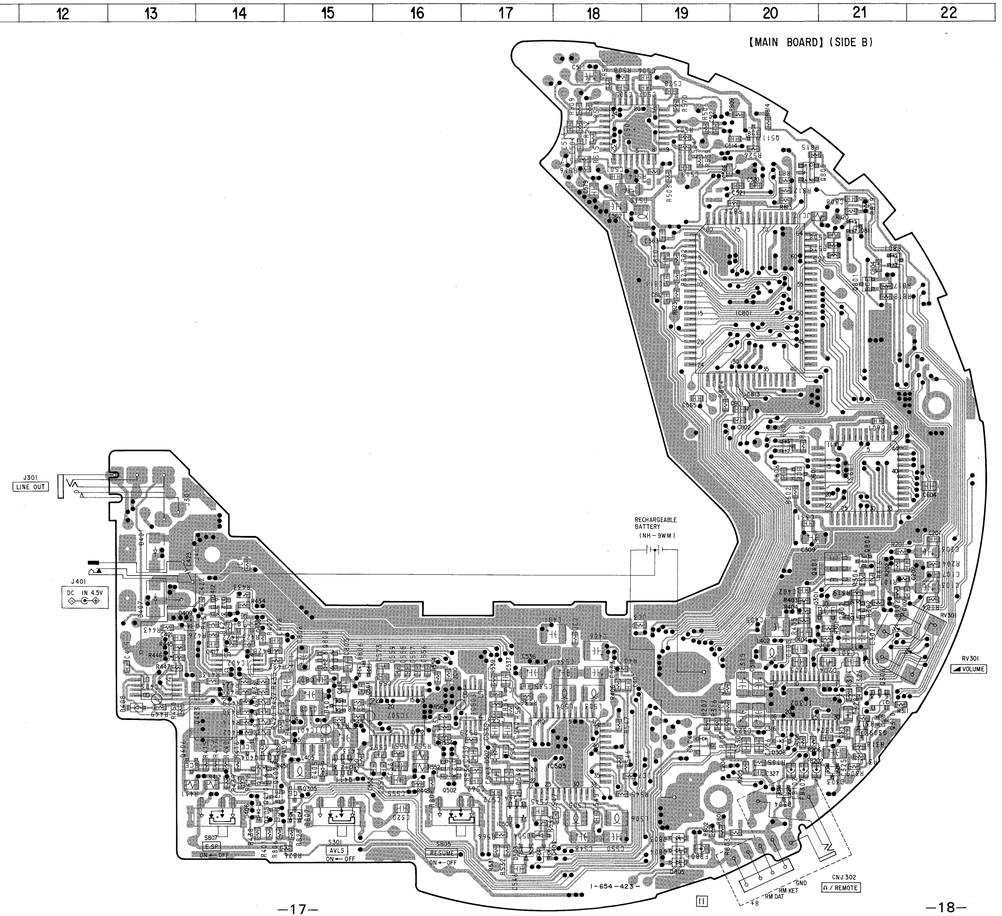

6-3. SCHEMATIC DIAGRAM • See pages 23 to 26 for IC Block Diagrams.

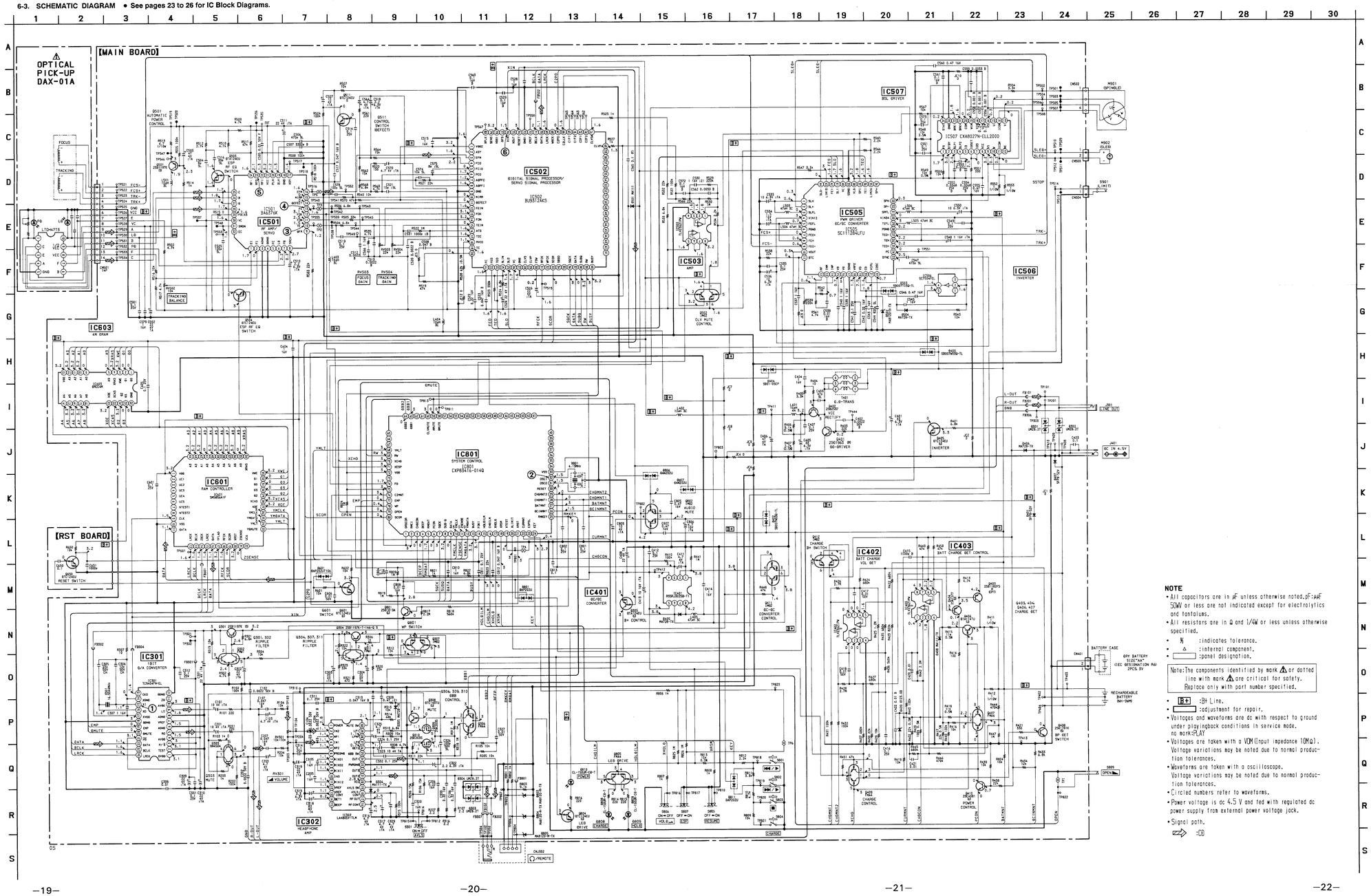

NOTE

- All capacitors are in μF unless otherwise noted. pF: μμF
- 50W or less are not indicated except for electrolytics and tantalums.
- All resistors are in Ω and 1/4W or less unless otherwise specified.
- % :indicates tolerance.
- △ :internal component.
- ▭ :panel designation.

Note: The components identified by mark ⚠ or dotted line with mark ⚠ are critical for safety. Replace only with part number specified.

- B+ :B+ Line.
- ▭ :adjustment for repair.
- Voltages and waveforms are dc with respect to ground under playingback conditions in service mode. no mark:PLAY
- Voltages are taken with a VOM (Input impedance 10MΩ). Voltage variations may be noted due to normal production tolerances.
- Waveforms are taken with a oscilloscope. Voltage variations may be noted due to normal production tolerances.
- Circled numbers refer to waveforms.
- Power voltage is dc 4.5 V and fed with regulated dc power supply from external power voltage jack.
- Signal path.
  ⇨ :CD

• Waveforms

❶ IC301 ⑮

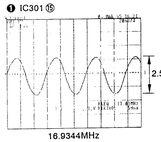

❷ IC801 ㉒

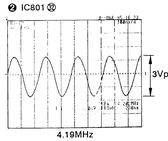

❸ IC501 ⑯ 500mV/DIV 100 μ s/DIV

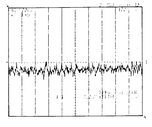

❹ IC501 ⑬ 200mV/DIV 500 μ s/DIV

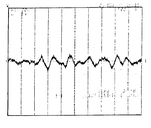

❺ IC501 ㉔ 500mV/DIV 1 μ s/DIV

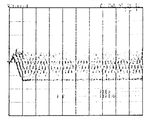

❻ IC502 ㊱

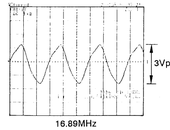

- **IC Block Diagrams**

IC301 TC9404FN-EL

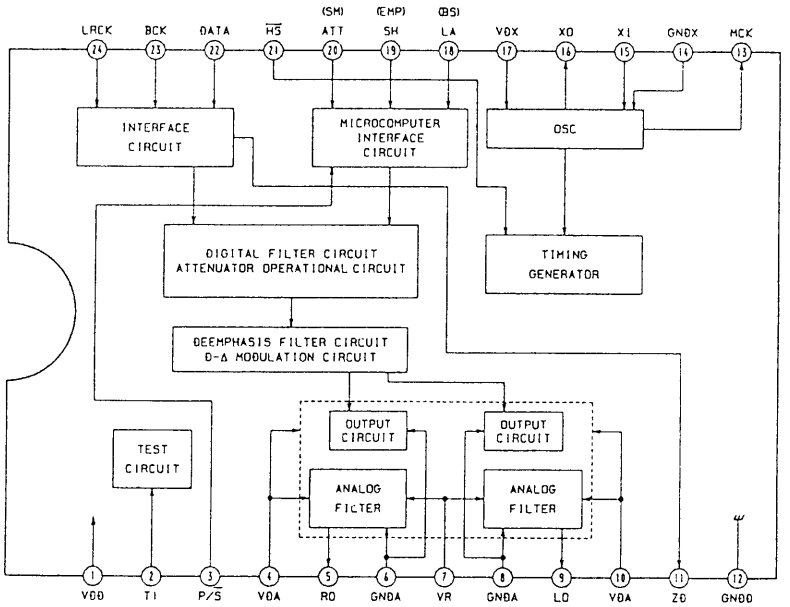

IC302 LA4805V-TLM

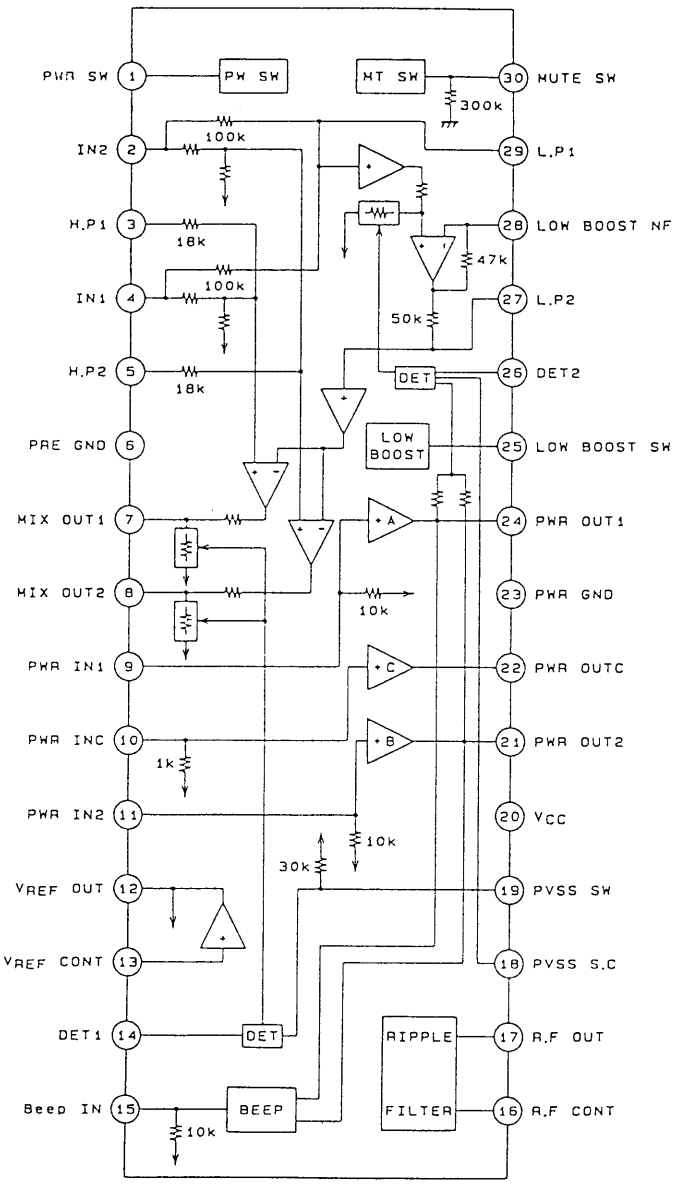

IC401 RS5RJ3025B-T1

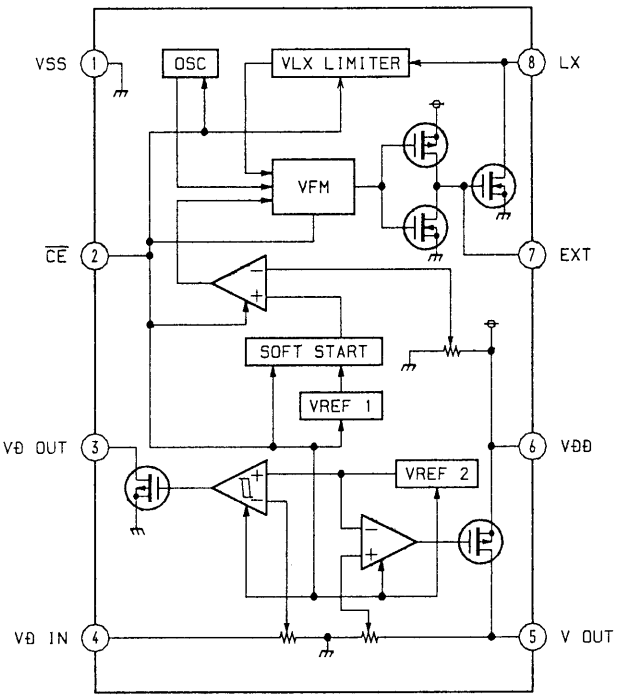

IC501 BA6376K

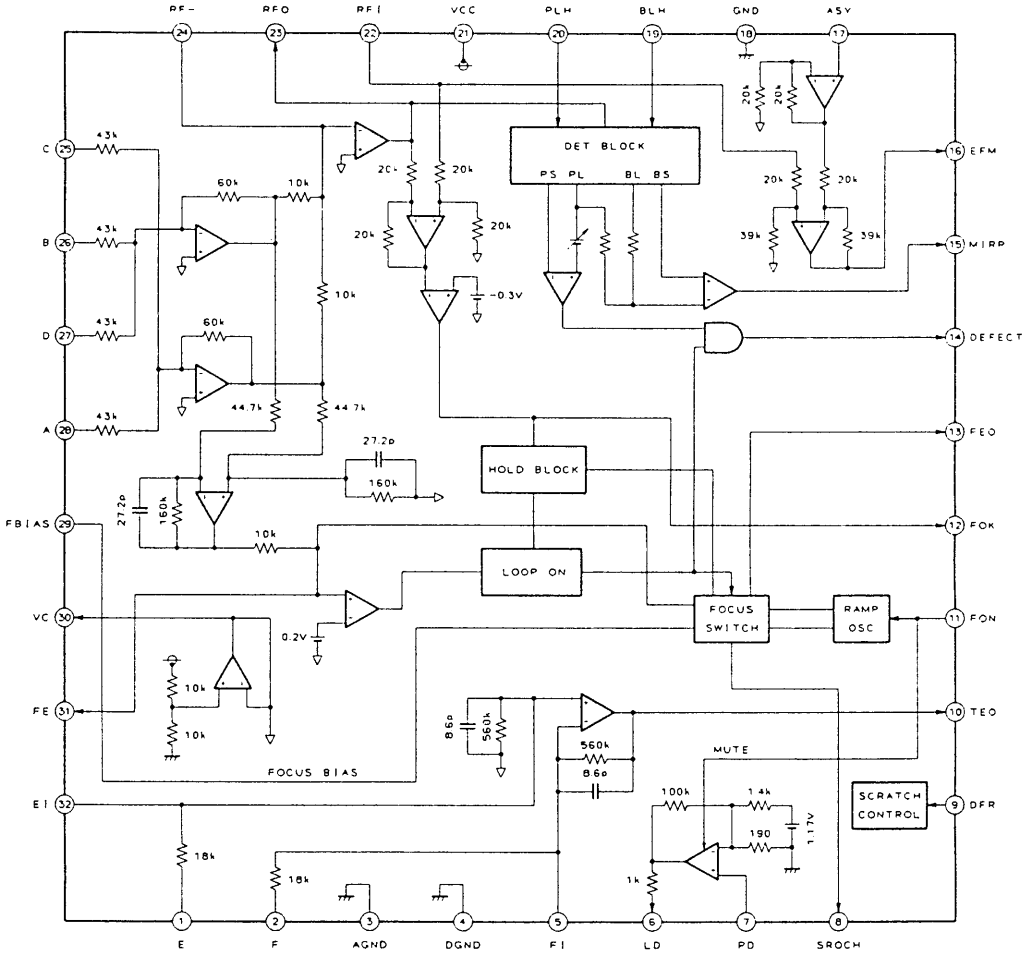

IC505 SC111284LFU

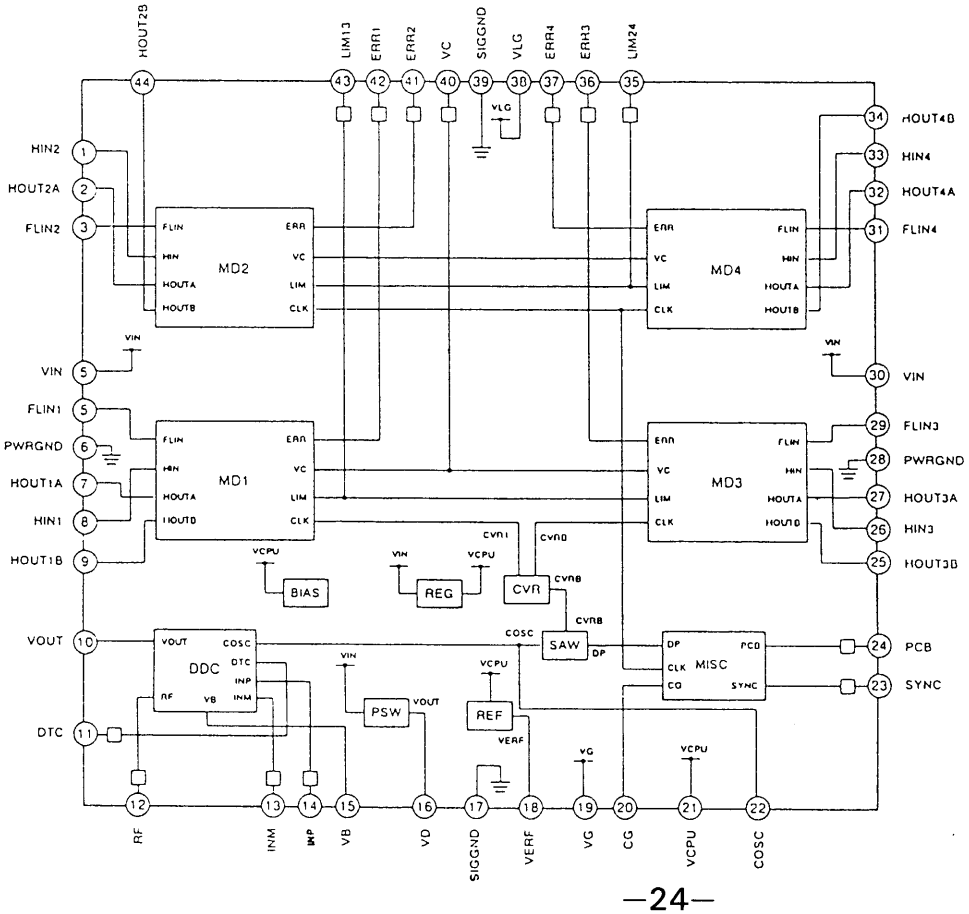

IC502 BU9312AKS

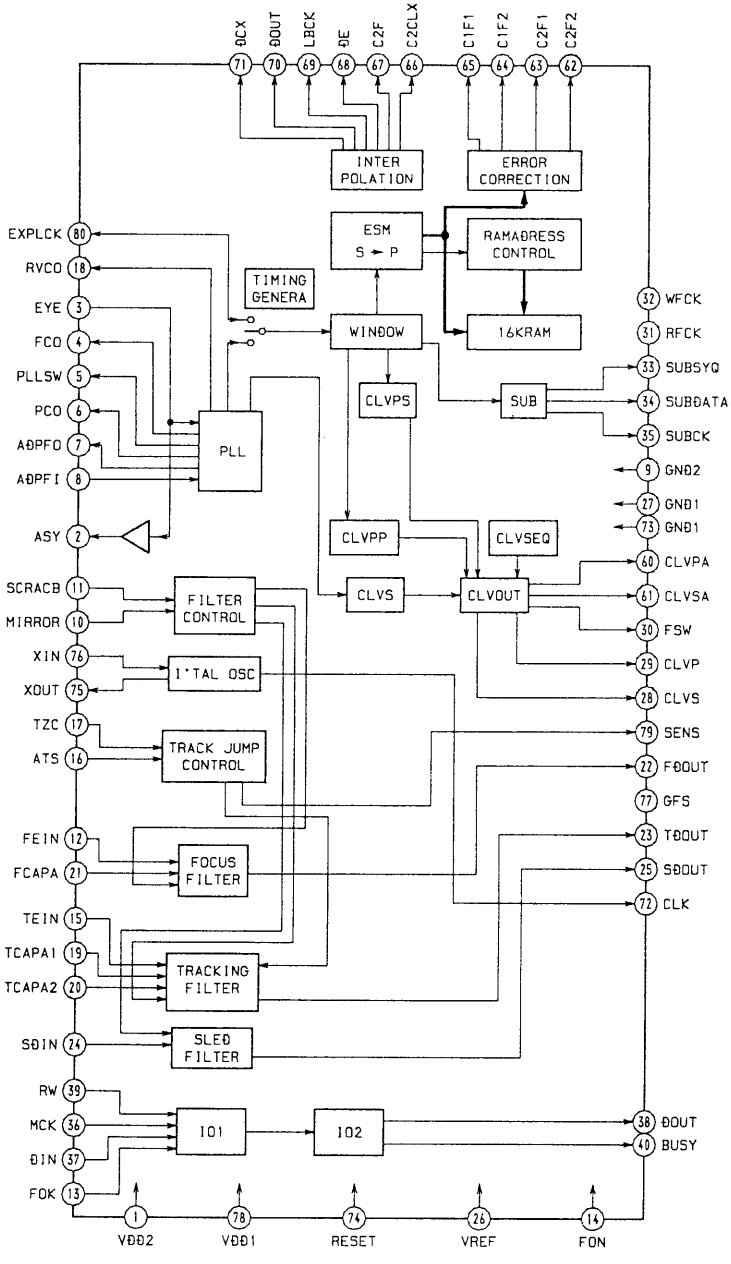

IC507 CXA8027N

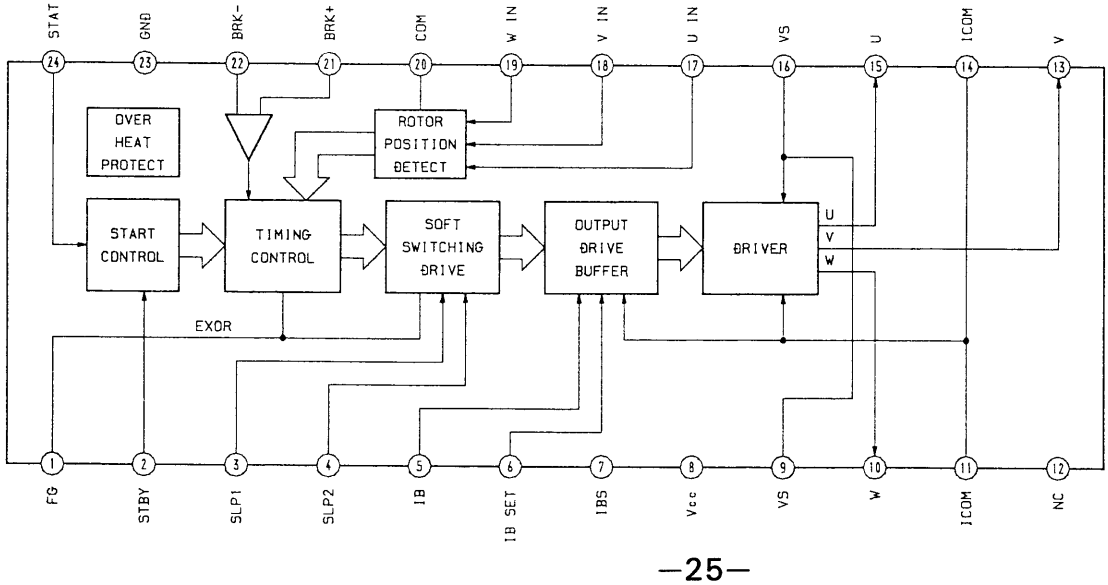

IC601 SM5856AF

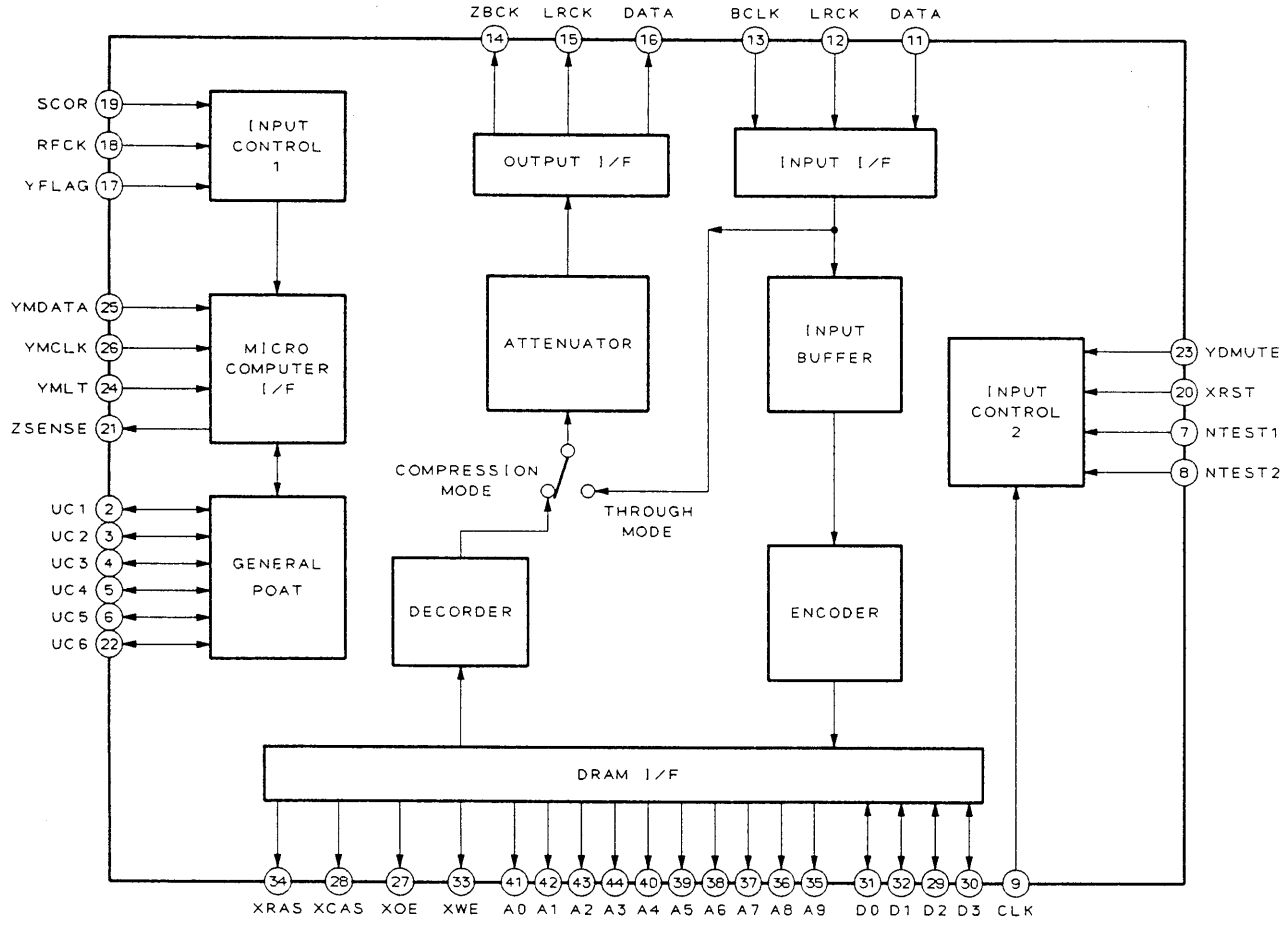

IC603 HM51W4400TT6-8

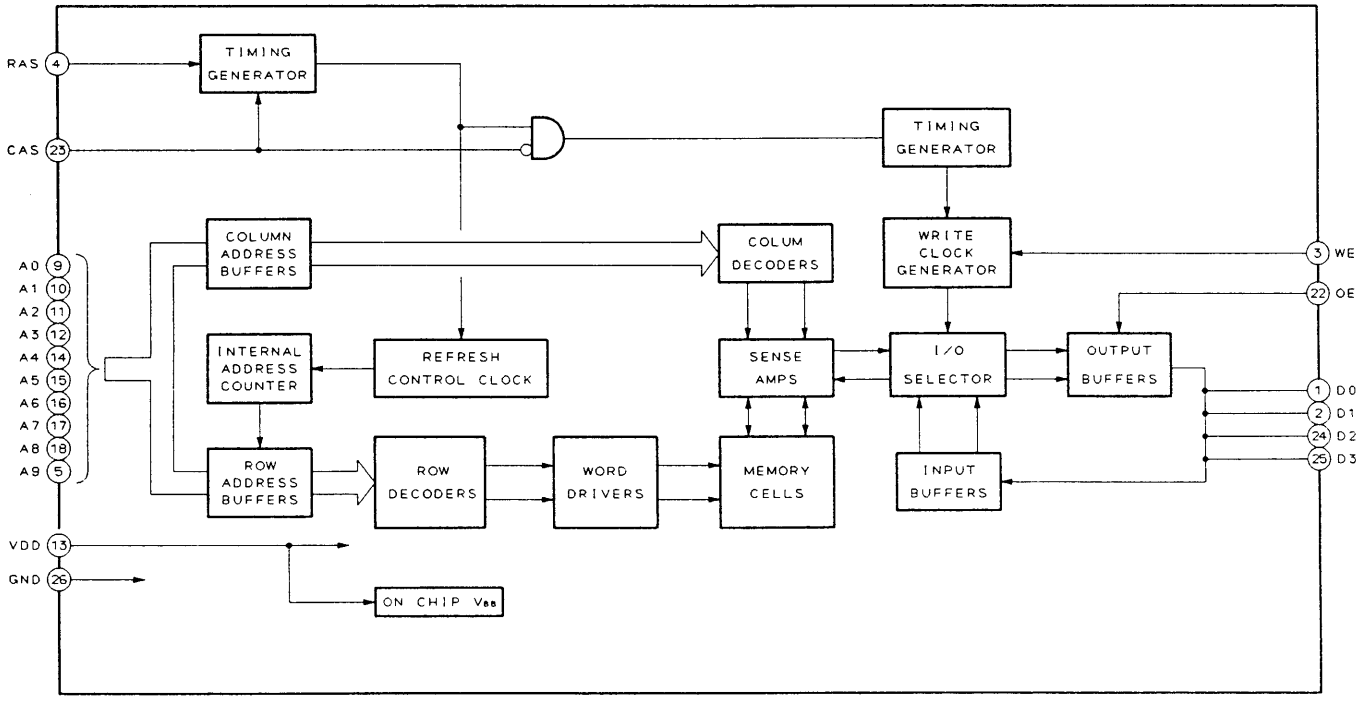

6-4. IC PIN FUNCTION DESCRIPTION
MAIN BOARD IC801 CXP83416-014Q (SYSTEM CONTROL)

Pin No.	Pin Name	I/O	Function
1	GRSCOR	I	Not used
2	RMCI	I	Not used
3	CHGCON	O	Charge current control output
4	BEEP	O	Buzzer sounds output
5	RMDAT	O	Wired remote control data output
6	PCON	O	Power supply control. "H": POWER ON
7	SQCK	O	Clock signal output to enter SUB-Q signal from BU9312AKS
8	SUB-Q	I	SUB-Q signal input from BU9312AKS
9	DATA	O	Command output from BU9312AKS
10	YMCLK	O	Serial clock output from SM5856AF
11	ZSENSE	I	Status input from SM5856AF
12	YMDATA	O	Command output from SM5856AF
13	BUSY	I	"L": Track jumping
14	FOKI	I	"H": Focus OK status
15	HOLDILM	O	"L": HOLD LED ON
16	CHGILM	O	"L": CHARGE LED ON
17	XHOLD	I	HOLD switch input. "L": HOLD ON
18	XRSM	I	RESUME switch input. "L": RESUME ON
19	XTEST	I	At microcomputer RESET, "L": Test mode. After RESET, "L": D-RAM remaining capacity
20	XLIMIT	I	"L": Pickup inside track detection
21	XRST	O	RESET signal output. "L": RESET
22	CURMNT	I	A/D input for charge current detection
23	ESPSL	I	A/D input of ESP switch. GND: 5-bit mode, 0.5 VDD: 4-bit mode, VDD: ESP OFF
24	KEY	I	A/D input of CHARGE SW, STOP SW, FF/PLAY SW, FR/PLAY SW on main unit
25	RMKEY	I	A/D input of FR/PLAY SW, FF/PLAY SW, STOP SW, PLAY MODE SW, REPEAT/ENTER SW, BASS BOOST SW on remote commander
26	DCINMNT	I	A/D input for DC-IN detection
27	BATMNT	I	A/D input for battery and external power supply voltage detection
28	CHGMNT1	I	A/D input 1 for battery charge voltage detection
29	CHGMNT2	I	A/D input 2 for battery charge voltage detection
30	RESET	I	Microcomputer RESET input
31	OSCO	O	Crystal oscillation output (4.19 MHz)
32	OSCI	I	Crystal oscillation input (4.19 MHz)
33	VSS	—	Ground
34	VL	—	Not used
35	VLC3	—	Not used
36	VLC2	—	Not used
37	VLC1	—	Not used
38	COM0	—	Not used
39	COM1	—	Not used
40	COM2	—	Not used

Pin No.	Pin Name	I/O	Function
41	COM3	—	Not used
42	SEG0	—	Not used
43	SEG1	—	Not used
44	SEG2	—	Not used
45	SEG3	—	Not used
46	SEG4	—	Not used
47	SEG5	—	Not used
48	SEG6	—	Not used
49	SEG7	—	Not used
50	SEG8	—	Not used
51	SEG9	—	Not used
52	SEG10	—	Not used
53	SEG11	—	Not used
54	SEG12	—	Not used
55	SEG13	—	Not used
56	SEG14	—	Not used
57	SEG15	—	Not used
58	DMUTE	O	"H": Digital mute ON
59	AMUTE	O	"H": Analog mute ON
60	CLVMUTE	O	"L": CLV stop
61	N.C.	O	Not used
62	N.C.	O	Not used
63	DBB1	O	DBB control output 1
64	DBB2	O	DBB control output 2
65	N.C.	O	Not used
66	N.C.	O	Not used
67	N.C.	O	Not used
68	YMLT	O	Latch output to SM5856AF
69	RW	O	Read/Write switching signal output to BU9312AKS
70	XCHG	O	Battery charge control output. "L": Charging
71	XESP	O	ESP status output. "L": ESP RF equalizer ON
72	VDD	—	Microcomputer power supply
73	TX	—	Not used
74	FG	I	Pulse input of CLV rotating detection. From CXA8027N
75	N.C.	—	Not used
76	C2MNT	O	C2PO control output. "H": C2PO ignored
77	EMP	O	Emphasis control output. "H": Emphasis ON
78	WP	I	Sleep mode reset signal input. Reset by the falling edge
79	OPEN	I	Door switch input. "H": Open, "L": Closed
80	SCOR	I	SCOR signal input from BU9312AKS

SECTION 7
EXPLODED VIEWS

NOTE:

- -XX and -X mean standardized parts, so they may have some difference from the original one.
- Color Indication of Appearance Parts
  Example:
  KNOB, BALANCE (WHITE) . . . (RED)
  ↑ Parts Color ↑ Cabinet's Color
- Items marked "*" are not stocked since they are seldom required for routine service. Some delay should be anticipated when ordering these items.
- The mechanical parts with no reference number in the exploded views are not supplied.
- Accessories and packing materials are given in the last of the electrical parts list.

The components identified by mark ⚠ or dotted line with mark ⚠ are critical for safety.
Replace only with part number specified.

Les composants identifiés par une marque ⚠ sont critiques pour la sécurité.
Ne les remplacer que par une pièce portant le neméro spécifié.

(1) CABINET SECTION-1

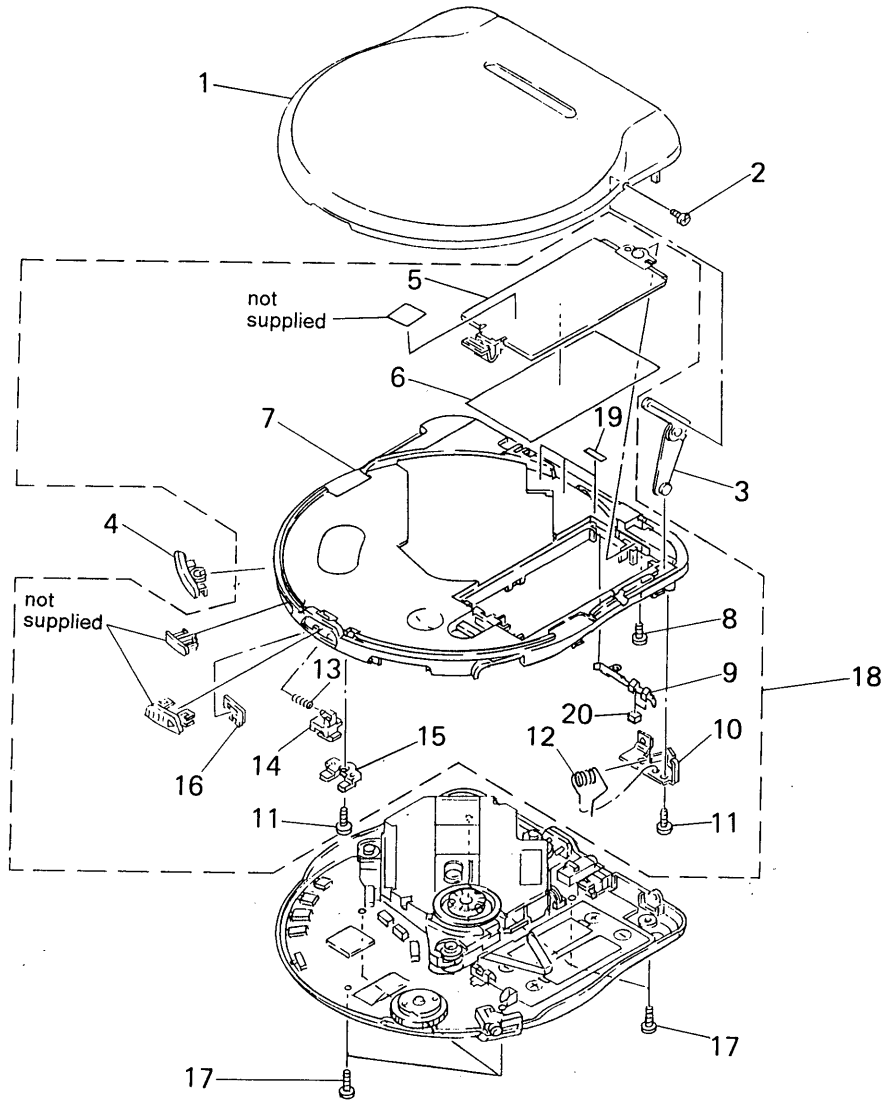

Ref. No.	Part No.	Description	Remark
1	X-4945-266-1	PANEL ASSY, UPPER	
2	3-704-197-33	SCREW (M1.4X3.0), LOCKING	
3	X-4945-270-1	ARM ASSY, SWITCHING	
4	4-969-361-01	BUTTON (AMS)	
5	X-4945-269-1	LID ASSY, BATTERY CASE	
6	4-969-382-01	SHEET (UPPER), BATTERY	
7	X-4945-267-1	CABINET ASSY	
8	3-893-942-11	SCREW (1.7X3), TAPPING (B)	
9	4-969-379-01	TERMINAL (RELAY), BATTERY	
10	4-969-370-01	BRACKET, SWITCHING	
11	4-887-321-01	SCREW (B1.7X4) (G), TAPPING	
12	4-969-372-01	SPRING (SWITCHING), COIL	
13	4-959-918-01	SPRING, COMPRESSION	
14	4-969-365-01	LEVER, LOCK	
15	4-969-366-01	PLATE, FIXED	
16	4-969-383-01	SLIDER	
17	3-318-203-82	SCREW (B1.7X7), TAPPING	
18	A-3303-323-A	CABINET BLOCK ASSY	
19	4-976-146-01	CUSHION	
20	4-975-899-01	CUSHION, RUBBER	

(2) CABINET SECTION-2

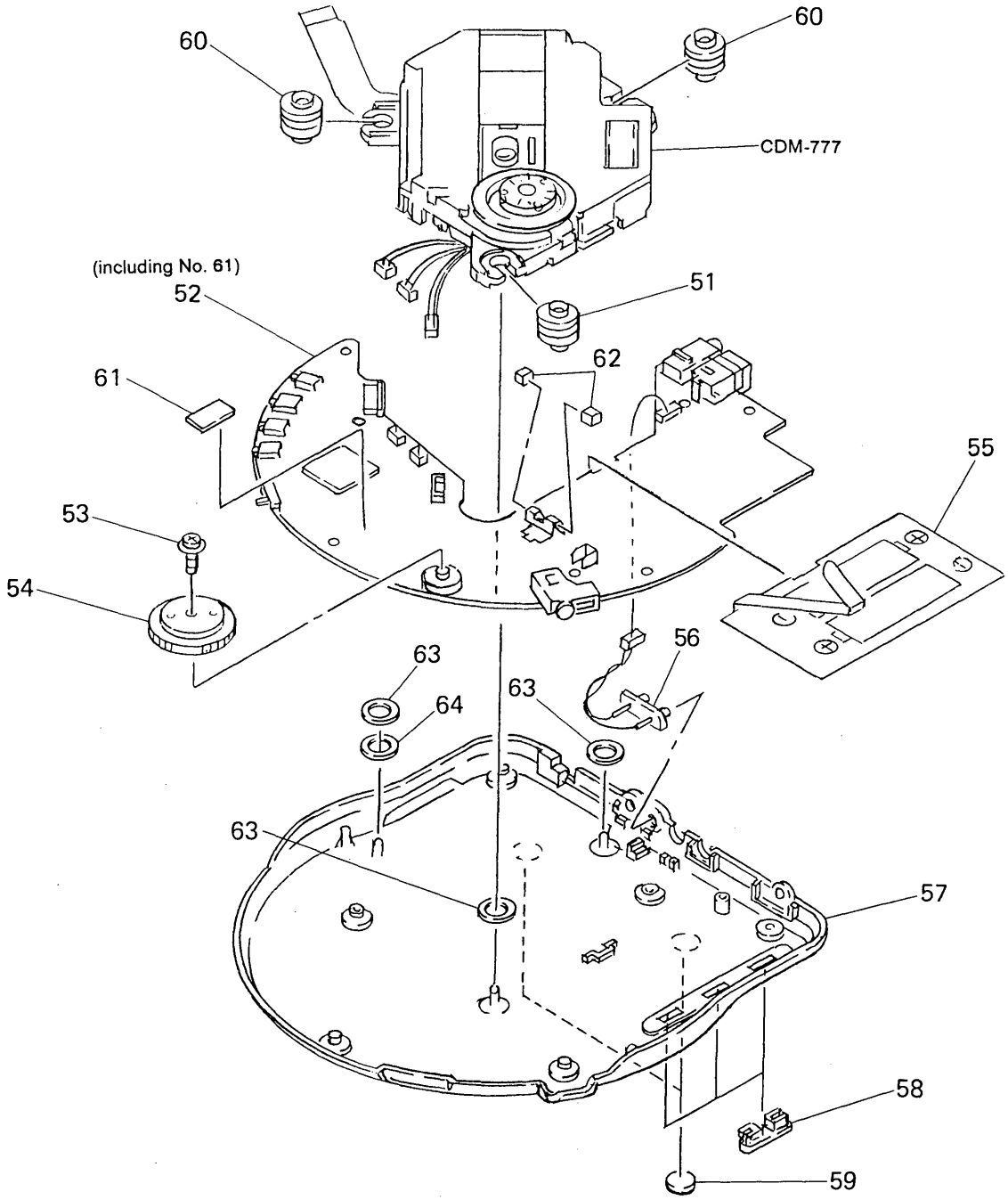

Ref. No.	Part No.	Description	Remark
51	4-974-207-01	INSULATOR	
52	A-3269-752-A	MAIN BOARD, COMPLETE	
53	3-345-648-01	SCREW (M1.4X3)	
54	4-947-871-01	KNOB (VOLUME)	
55	4-969-387-01	SHEET (LOWER), BATTERY	
56	X-4945-272-1	TERMINAL ASSY, EBP	
* 57	4-969-354-11	PANEL, BOTTOM	
58	4-969-363-01	KNOB (RESUME)	
59	4-912-641-01	FOOT, RUBBER	
60	4-974-207-11	INSULATOR	
* 61	1-657-773-11	RST BOARD	
62	4-975-899-01	CUSHION, RUBBER	
63	4-976-743-01	SPACER	
64	4-976-319-01	SPACER	

(3) OPTICAL PICK-UP SECTION (CDM-777)

Note:	Note:
The components identified by mark ⚠ or dotted line with mark ⚠ are critical for safety. Replace only with part number specified.	Les composants identifiés par une marque ⚠ sont critiques pour la sécurité. Ne les remplacer que par une pièce portant le neméro spécifié.

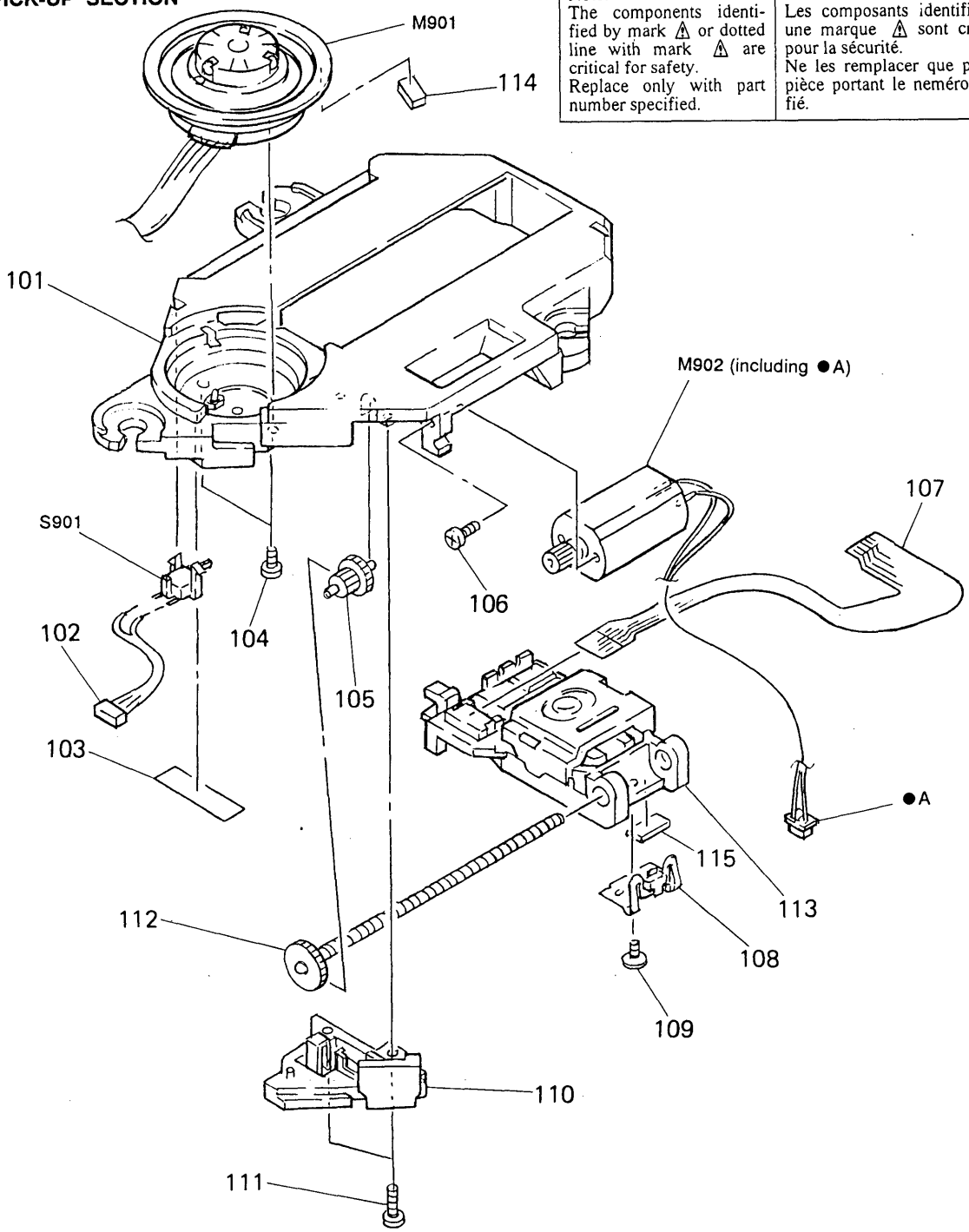

Ref. No.	Part No.	Description	Remark
101	4-970-056-01	CHASSIS	
102	1-769-130-31	LEAD (WITH CONNECTOR)	
103	3-831-441-XX	CUSHION, SPEAKER	
104	3-703-816-71	SCREW (M1.4X3.0), SPECIAL HEAD	
105	4-970-062-01	GEAR (B)	
106	3-703-816-51	SCREW (M1.4X3.5), SPECIAL HEAD	
107	1-656-318-11	SLIDE FLEXIBLE BOARD	
108	4-970-058-01	RACK (OUTSERT)	
109	4-973-631-01	SCREW	
110	4-970-057-01	SPRING, SLED	
111	4-912-432-01	SCREW (B1.4X5), TAPPING	
112	A-3303-319-A	SCREW ASSY, FEED	
⚠113	X-4946-311-1	DEVICE, OPTICAL (DAX-01A)	
114	4-976-775-01	CUSHION	
115	4-976-776-01	CUSHION	
M901	1-698-469-11	MOTOR (SPINDLE)	
M902	A-3303-316-A	MOTOR ASSY, SLED	
S901	1-571-099-11	SWITCH (1 KEY) (LIMIT)	

MAIN

SECTION 8
ELECTRICAL PARTS LIST

NOTE:
- Due to standardization, replacements in the parts list may be different from the parts specified in the diagrams or the components used on the set.
- -XX and -X mean standardized parts, so they may have some difference from the original one.
- RESISTORS
  All resistors are in ohms.
  METAL:Metal-film resistor.
  METAL OXIDE: Metal oxide-film resistor.
  F:nonflammable
- Abbreviation CND:Canadian JE:Tourist
- Items marked "*" are not stocked since they are seldom required for routine service. Some delay should be anticipated when ordering these items.
- SEMICONDUCTORS
  In each case, u:μ, for example:
  uA..: μA.. uPA..: μPA..
  uPB..: μPB.. uPC..: μPC.. uPD..: μPD..
- CAPACITORS
  uF: μF
- COILS
  uH: μH

When indicating parts by reference number, please include the board.

The components identified by mark ⚠ or dotted line with mark ⚠ are critical for safety. Replace only with part number specified.

Les composants identifiés par une marque ⚠ sont critiques pour la sécurité.
Ne les remplacer que par une pièce portant le numéro spécifié.

Ref. No.	Part No.	Description			Remark
	A-3269-752-A	MAIN BOARD, COMPLETE			
		**********			
*	3-315-076-01	SPACER, BRAKE			
	3-831-441-XX	SPACER, KNOB			
	4-969-377-01	TERMINAL (+), BATTERY			
	4-969-378-01	TERMINAL (-), BATTERY			
		< CAPACITOR >			
C101	1-135-201-11	TANTALUM CHIP	10uF	20%	4V
C102	1-162-966-11	CERAMIC CHIP	0.0022uF	10%	50V
C103	1-135-151-21	TANTALUM CHIP	4.7uF	20%	4V
C104	1-164-161-11	CERAMIC CHIP	0.0022uF	10%	100V
C105	1-164-346-11	CERAMIC CHIP	1uF		16V
C106	1-164-489-11	CERAMIC CHIP	0.22uF	10%	16V
C107	1-165-176-11	CERAMIC CHIP	0.047uF	10%	16V
C201	1-135-201-11	TANTALUM CHIP	10uF	20%	4V
C202	1-162-966-11	CERAMIC CHIP	0.0022uF	10%	50V
C203	1-135-151-21	TANTALUM CHIP	4.7uF	20%	4V
C204	1-164-161-11	CERAMIC CHIP	0.0022uF	10%	100V
C205	1-164-346-11	CERAMIC CHIP	1uF		16V
C206	1-164-489-11	CERAMIC CHIP	0.22uF	10%	16V
C207	1-165-176-11	CERAMIC CHIP	0.047uF	10%	16V
C301	1-104-847-11	TANTAL. CHIP	22uF	20%	4V
C302	1-104-847-11	TANTAL. CHIP	22uF	20%	4V
C303	1-104-847-11	TANTAL. CHIP	22uF	20%	4V
C304	1-104-847-11	TANTAL. CHIP	22uF	20%	4V
C305	1-162-919-11	CERAMIC CHIP	22PF	5%	50V
C306	1-162-916-11	CERAMIC CHIP	12PF	5%	50V
C307	1-164-346-11	CERAMIC CHIP	1uF		16V
C308	1-163-031-11	CERAMIC CHIP	0.01uF		50V
C309	1-104-847-11	TANTAL. CHIP	22uF	20%	4V
C310	1-104-847-11	TANTAL. CHIP	22uF	20%	4V
C311	1-164-156-11	CERAMIC CHIP	0.1uF		25V
C312	1-164-156-11	CERAMIC CHIP	0.1uF		25V
C313	1-165-176-11	CERAMIC CHIP	0.047uF	10%	16V
C314	1-164-156-11	CERAMIC CHIP	0.1uF		25V
C315	1-135-180-21	TANTALUM CHIP	3.3uF	20%	6.3V
C316	1-135-151-21	TANTALUM CHIP	4.7uF	20%	4V
C317	1-135-151-21	TANTALUM CHIP	4.7uF	20%	4V
C318	1-104-847-11	TANTAL. CHIP	22uF	20%	4V
C319	1-104-847-11	TANTAL. CHIP	22uF	20%	4V
C320	1-164-346-11	CERAMIC CHIP	1uF		16V
C322	1-135-149-21	TANTALUM CHIP	2.2uF	20%	10V
C323	1-135-201-11	TANTALUM CHIP	10uF	20%	4V
C324	1-164-156-11	CERAMIC CHIP	0.1uF		25V
C325	1-135-151-21	TANTALUM CHIP	4.7uF	20%	4V
C326	1-162-953-11	CERAMIC CHIP	100PF	5%	50V
C327	1-162-974-11	CERAMIC CHIP	0.01uF		50V
C328	1-164-005-11	CERAMIC CHIP	0.47uF		25V
C329	1-135-151-21	TANTALUM CHIP	4.7uF	20%	4V
C330	1-164-489-11	CERAMIC CHIP	0.22uF	10%	16V
C331	1-164-156-11	CERAMIC CHIP	0.1uF		25V
C332	1-164-156-11	CERAMIC CHIP	0.1uF		25V
C401	1-104-752-11	TANTAL. CHIP	33uF	20%	6.3V
C402	1-162-966-11	CERAMIC CHIP	0.0022uF	10%	50V
C403	1-162-949-11	CERAMIC CHIP	47PF	5%	50V
C404	1-164-346-11	CERAMIC CHIP	1uF		16V
C405	1-104-752-11	TANTAL. CHIP	33uF	20%	6.3V
C406	1-104-908-11	TANTAL. CHIP	47uF	20%	4V
C407	1-164-156-11	CERAMIC CHIP	0.1uF		25V
C408	1-104-847-11	TANTAL. CHIP	22uF	20%	4V
C411	1-135-151-21	TANTALUM CHIP	4.7uF	20%	4V
C412	1-164-156-11	CERAMIC CHIP	0.1uF		25V
C413	1-104-913-11	TANTAL. CHIP	10uF	20%	16V
C414	1-164-346-11	CERAMIC CHIP	1uF		16V
C415	1-162-964-11	CERAMIC CHIP	0.001uF	10%	50V
C416	1-164-156-11	CERAMIC CHIP	0.1uF		25V
C417	1-162-974-11	CERAMIC CHIP	0.01uF		50V
C418	1-162-974-11	CERAMIC CHIP	0.01uF		50V
C420	1-162-974-11	CERAMIC CHIP	0.01uF		50V
C421	1-162-974-11	CERAMIC CHIP	0.01uF		50V
C422	1-162-970-11	CERAMIC CHIP	0.01uF	10%	25V
C501	1-164-156-11	CERAMIC CHIP	0.1uF		25V
C502	1-104-847-11	TANTAL. CHIP	22uF	20%	4V
C503	1-104-908-11	TANTAL. CHIP	47uF	20%	4V
C504	1-162-939-11	CERAMIC CHIP	8PF	0.5PF	50V
C505	1-162-974-11	CERAMIC CHIP	0.01uF		50V
C506	1-164-362-11	CERAMIC CHIP	470PF	5%	50V

Ref. No.	Part No.	Description			Remark
C507	1-162-967-11	CERAMIC CHIP	0.0033uF	10%	50V
C508	1-165-176-11	CERAMIC CHIP	0.047uF	10%	16V
C510	1-135-149-21	TANTALUM CHIP	2.2uF	20%	10V
C511	1-104-847-11	TANTAL. CHIP	22uF	20%	4V
C512	1-162-966-11	CERAMIC CHIP	0.0022uF	10%	50V
C513	1-162-966-11	CERAMIC CHIP	0.0022uF	10%	50V
C514	1-164-156-11	CERAMIC CHIP	0.1uF		25V
C515	1-164-346-11	CERAMIC CHIP	1uF		16V
C516	1-162-948-11	CERAMIC CHIP	39PF	5%	50V
C517	1-165-176-11	CERAMIC CHIP	0.047uF	10%	16V
C518	1-135-149-21	TANTALUM CHIP	2.2uF	20%	10V
C519	1-164-156-11	CERAMIC CHIP	0.1uF		25V
C520	1-162-966-11	CERAMIC CHIP	0.0022uF	10%	50V
C521	1-162-941-11	CERAMIC CHIP	10PF	0.5PF	50V
C522	1-165-128-11	CERAMIC CHIP	0.22uF		16V
C523	1-165-176-11	CERAMIC CHIP	0.047uF	10%	16V
C524	1-104-847-11	TANTAL. CHIP	22uF	20%	4V
C525	1-162-953-11	CERAMIC CHIP	100PF	5%	50V
C526	1-104-847-11	TANTAL. CHIP	22uF	20%	4V
C527	1-135-201-11	TANTALUM CHIP	10uF	20%	4V
C528	1-164-346-11	CERAMIC CHIP	1uF		16V
C529	1-107-826-11	CERAMIC CHIP	0.1uF	10%	16V
C530	1-164-346-11	CERAMIC CHIP	1uF		16V
C531	1-162-964-11	CERAMIC CHIP	0.001uF	10%	50V
C533	1-135-259-11	TANTAL. CHIP	10uF	20%	6.3V
C534	1-135-148-21	TANTAL. CHIP	1.5uF	20%	16V
C535	1-164-156-11	CERAMIC CHIP	0.1uF		25V
C536	1-135-259-11	TANTAL. CHIP	10uF	20%	6.3V
C537	1-164-346-11	CERAMIC CHIP	1uF		16V
C538	1-162-970-11	CERAMIC CHIP	0.01uF	10%	25V
C539	1-164-346-11	CERAMIC CHIP	1uF		16V
C540	1-164-346-11	CERAMIC CHIP	1uF		16V
C541	1-164-156-11	CERAMIC CHIP	0.1uF		25V
C542	1-164-489-11	CERAMIC CHIP	0.22uF	10%	16V
C543	1-164-346-11	CERAMIC CHIP	1uF		16V
C544	1-164-473-11	CERAMIC CHIP	820PF	5%	50V
C545	1-164-346-11	CERAMIC CHIP	1uF		16V
C546	1-164-005-11	CERAMIC CHIP	0.47uF		25V
C547	1-164-362-11	CERAMIC CHIP	470PF	5%	50V
C548	1-135-091-00	TANTAL. CHIP	1uF	20%	16V
C549	1-164-156-11	CERAMIC CHIP	0.1uF		25V
C550	1-135-259-11	TANTAL. CHIP	10uF	20%	6.3V
C551	1-164-156-11	CERAMIC CHIP	0.1uF		25V
C552	1-162-969-11	CERAMIC CHIP	0.0068uF	10%	25V
C553	1-164-227-11	CERAMIC CHIP	0.022uF	10%	25V
C554	1-162-969-11	CERAMIC CHIP	0.0068uF	10%	25V
C555	1-164-005-11	CERAMIC CHIP	0.47uF		25V
C556	1-162-964-11	CERAMIC CHIP	0.001uF	10%	50V
C557	1-162-964-11	CERAMIC CHIP	0.001uF	10%	50V
C558	1-162-964-11	CERAMIC CHIP	0.001uF	10%	50V
C559	1-162-967-11	CERAMIC CHIP	0.0033uF	10%	50V
C560	1-164-005-11	CERAMIC CHIP	0.47uF		25V
C561	1-107-826-11	CERAMIC CHIP	0.1uF	10%	16V
C562	1-162-967-11	CERAMIC CHIP	0.0033uF	10%	50V
C563	1-107-826-11	CERAMIC CHIP	0.1uF	10%	16V
C564	1-135-151-21	TANTALUM CHIP	4.7uF	20%	4V
C565	1-164-156-11	CERAMIC CHIP	0.1uF		25V
C566	1-164-346-11	CERAMIC CHIP	1uF		16V
C570	1-135-151-21	TANTALUM CHIP	4.7uF	20%	4V
C572	1-107-826-11	CERAMIC CHIP	0.1uF	10%	16V
C573	1-164-156-11	CERAMIC CHIP	0.1uF		25V
C574	1-162-941-11	CERAMIC CHIP	10PF	0.5PF	50V
C575	1-162-939-11	CERAMIC CHIP	8PF	0.5PF	50V
C578	1-162-953-11	CERAMIC CHIP	100PF	5%	50V
C579	1-164-346-11	CERAMIC CHIP	1uF		16V
C601	1-164-156-11	CERAMIC CHIP	0.1uF		25V
C604	1-164-346-11	CERAMIC CHIP	1uF		16V
C605	1-164-156-11	CERAMIC CHIP	0.1uF		25V
C606	1-162-974-11	CERAMIC CHIP	0.01uF		50V
C801	1-164-156-11	CERAMIC CHIP	0.1uF		25V
C802	1-164-156-11	CERAMIC CHIP	0.1uF		25V
C803	1-135-201-11	TANTALUM CHIP	10uF	20%	4V
C804	1-164-156-11	CERAMIC CHIP	0.1uF		25V
C805	1-164-005-11	CERAMIC CHIP	0.47uF		25V
C806	1-135-210-11	TANTALUM CHIP	4.7uF	20%	10V
C807	1-164-005-11	CERAMIC CHIP	0.47uF		25V
C808	1-162-970-11	CERAMIC CHIP	0.01uF	10%	25V
C810	1-164-346-11	CERAMIC CHIP	1uF		16V
C811	1-164-156-11	CERAMIC CHIP	0.1uF		25V
C812	1-165-176-11	CERAMIC CHIP	0.047uF	10%	16V

< CONNECTOR >

CN401	1-770-359-11	PIN, CONNECTOR (PC BOARD) 2P
CN501	1-573-354-11	CONNECTOR, FFC/FPC 14P
CN502	1-770-360-21	PIN, CONNECTOR (PC BOARD) 4P
CN503	1-770-359-41	PIN, CONNECTOR (PC BOARD) 2P
CN504	1-770-359-11	PIN, CONNECTOR (PC BOARD) 2P

< JACK >

CNJ302	1-568-758-21	JACK (Ω/REMOTE)
J301	1-563-715-51	JACK (LINE OUT)
J401	1-691-099-51	JACK, DC(POLARITY UNIFIED TYPE)(DC IN 4.5V)

< DIODE >

D301	8-719-039-99	DIODE UMZ8.2T
D302	8-719-039-99	DIODE UMZ8.2T
D303	8-719-039-99	DIODE UMZ8.2T

MAIN

Ref. No.	Part No.	Description		Remark
D304	8-719-039-99	DIODE	UMZ8.2T	
D305	8-719-421-27	DIODE	MA728	
D306	8-719-404-49	DIODE	MA111	
D401	8-719-313-73	DIODE	SFPB-52	
D402	8-719-988-78	DIODE	SB007W03Q	
D403	8-719-988-78	DIODE	SB007W03Q	
D404	8-719-938-72	DIODE	SB01-05CP	
D405	8-719-421-27	DIODE	MA728	
D406	8-719-421-27	DIODE	MA728	
D407	8-719-313-73	DIODE	SFPB-52	
D408	8-719-404-49	DIODE	MA111	
D409	8-719-157-93	DIODE	RD3.0SB2	
D501	8-719-404-49	DIODE	MA111	
D502	8-719-423-35	DIODE	MA8120-H	
D503	8-719-023-69	DIODE	SB007T03Q	
D504	8-719-421-27	DIODE	MA728	
D601	8-719-941-09	DIODE	DAP202U	
D801	8-719-941-09	DIODE	DAP202U	
D803	8-719-423-32	DIODE	MA8120-M	
D804	8-719-423-32	DIODE	MA8120-M	
D805	8-719-423-32	DIODE	MA8120-M	
D806	8-719-941-86	DIODE	DAN202U	
D807	8-719-941-86	DIODE	DAN202U	
D808	8-719-026-39	LED	CL-150UR-CD	(CHARGE)
D809	8-719-026-39	LED	CL-150UR-CD	(HOLD)
D810	8-719-026-39	LED	CL-150UR-CD	(POWER)
D811	8-719-941-09	DIODE	DAP202U	

< FERRITE BEAD >

FB101	1-414-135-11	INDUCTOR CHIP	0UH	
FB102	1-414-135-11	INDUCTOR CHIP	0UH	
FB201	1-414-135-11	INDUCTOR CHIP	0UH	
FB202	1-414-135-11	INDUCTOR CHIP	0UH	
FB301	1-414-135-11	INDUCTOR CHIP	0UH	
FB302	1-414-135-11	INDUCTOR CHIP	0UH	
FB304	1-414-135-11	INDUCTOR CHIP	0UH	
FB306	1-414-135-11	INDUCTOR CHIP	0UH	
FB307	1-414-135-11	INDUCTOR CHIP	0UH	
FB502	1-414-135-11	INDUCTOR CHIP	0UH	
FB601	1-414-135-11	INDUCTOR CHIP	0UH	
FB801	1-414-135-11	INDUCTOR CHIP	0UH	

< IC >

IC301	8-759-327-78	IC	TC9404FN-EL	
IC302	8-759-166-95	IC	LA4805V-TLM	
IC401	8-759-297-20	IC	RS5RJ3025B-T1	
IC402	8-759-252-90	IC	TLV2362IPW-ELM1500	
IC403	8-759-252-90	IC	TLV2362IPW-ELM1500	
IC501	8-759-335-59	IC	BA6376K	
IC502	8-759-348-77	IC	BU9312AKS	
IC503	8-759-252-90	IC	TLV2362IPW-ELM1500	
IC505	8-759-342-16	IC	SC111284LFU	
IC506	8-759-031-84	IC	SC7S04F	
IC507	8-759-098-52	IC	CXA8027N	
IC601	8-759-351-65	IC	SM5856A1F	
IC603	8-759-341-28	IC	HM51W4400TT6-8	
IC801	8-752-863-30	IC	CXP83416-014Q	

< JUMPER RESISTOR >

JC1	1-216-864-11	METAL CHIP	0	5%	1/16W
JC2	1-216-864-11	METAL CHIP	0	5%	1/16W
JC3	1-216-864-11	METAL CHIP	0	5%	1/16W
JC4	1-216-864-11	METAL CHIP	0	5%	1/16W
JC5	1-216-864-11	METAL CHIP	0	5%	1/16W
JC6	1-216-864-11	METAL CHIP	0	5%	1/16W
JC7	1-216-864-11	METAL CHIP	0	5%	1/16W
JC8	1-216-864-11	METAL CHIP	0	5%	1/16W
JC9	1-216-864-11	METAL CHIP	0	5%	1/16W
JC10	1-216-864-11	METAL CHIP	0	5%	1/16W
JC12	1-216-295-00	METAL CHIP	0	5%	1/10W

< COIL >

L401	1-414-431-11	INDUCTOR	10uH
L402	1-414-398-11	INDUCTOR	10uH
L403	1-414-398-11	INDUCTOR	10uH
L404	1-414-398-11	INDUCTOR	10uH
L405	1-414-402-11	INDUCTOR	47uH
L501	1-414-398-11	INDUCTOR	10uH
L503	1-414-402-11	INDUCTOR	47uH
L504	1-414-402-11	INDUCTOR	47uH
L505	1-414-402-11	INDUCTOR	47uH
L506	1-414-402-11	INDUCTOR	47uH

< TRANSISTOR >

Q301	8-729-904-86	TRANSISTOR	2SB1197K-Q
Q302	8-729-903-10	TRANSISTOR	FMW1
Q303	8-729-425-18	TRANSISTOR	XN4504
Q304	8-729-904-86	TRANSISTOR	2SB1197K-Q
Q305	8-729-905-57	TRANSISTOR	DTA124EU
Q306	8-729-902-90	TRANSISTOR	FMA4
Q307	8-729-907-39	TRANSISTOR	IMD2
Q308	8-729-922-94	TRANSISTOR	DTC143TU
Q309	8-729-024-46	TRANSISTOR	2SK2035TE85L
Q310	8-729-024-46	TRANSISTOR	2SK2035TE85L
Q311	8-729-903-10	TRANSISTOR	FMW1

Ref. No.	Part No.	Description		Remark
Q401	8-729-923-36	TRANSISTOR	2SD1963-Q.R	
Q402	8-729-031-11	TRANSISTOR	2SD2537-T100VW	
Q403	8-729-921-93	TRANSISTOR	2SB1182F5-QR	
Q404	8-729-922-10	TRANSISTOR	2SA1577-QR	
Q405	8-729-905-61	TRANSISTOR	DTC124EU	
Q406	8-729-905-96	TRANSISTOR	DTA114TU	
Q407	8-729-902-90	TRANSISTOR	FMA4	
Q408	8-729-921-73	TRANSISTOR	2SD1781K-QR	
Q409	8-729-902-90	TRANSISTOR	FMA4	
Q410	8-729-120-28	TRANSISTOR	2SC1623-L5L6	
Q411	8-729-907-39	TRANSISTOR	IMD2	
Q412	8-729-907-39	TRANSISTOR	IMD2	
Q501	8-729-904-86	TRANSISTOR	2SB1197K-Q	
Q502	8-729-907-39	TRANSISTOR	IMD2	
Q503	8-729-905-57	TRANSISTOR	DTA124EU	
Q504	8-729-905-61	TRANSISTOR	DTC124EU	
Q511	8-729-905-61	TRANSISTOR	DTC124EU	
Q601	8-729-905-61	TRANSISTOR	DTC124EU	
Q801	8-729-230-63	TRANSISTOR	2SC4116-YG	
Q802	8-729-907-39	TRANSISTOR	IMD2	
Q804	8-729-905-61	TRANSISTOR	DTC124EU	
Q805	8-729-902-90	TRANSISTOR	FMA4	

< RESISTOR >

Ref. No.	Part No.	Description				Remark
R101	1-216-813-11	METAL CHIP	220	5%	1/16W	
R102	1-216-845-11	METAL CHIP	100K	5%	1/16W	
R103	1-216-821-11	METAL CHIP	1K	5%	1/16W	
R104	1-216-833-11	METAL CHIP	10K	5%	1/16W	
R105	1-216-833-11	METAL CHIP	10K	5%	1/16W	
R106	1-216-835-11	METAL CHIP	15K	5%	1/16W	
R107	1-216-789-11	METAL CHIP	2.2	5%	1/16W	
R201	1-216-813-11	METAL CHIP	220	5%	1/16W	
R202	1-216-845-11	METAL CHIP	100K	5%	1/16W	
R203	1-216-821-11	METAL CHIP	1K	5%	1/16W	
R204	1-216-833-11	METAL CHIP	10K	5%	1/16W	
R205	1-216-833-11	METAL CHIP	10K	5%	1/16W	
R206	1-216-835-11	METAL CHIP	15K	5%	1/16W	
R207	1-216-789-11	METAL CHIP	2.2	5%	1/16W	
R301	1-216-831-11	METAL CHIP	6.8K	5%	1/16W	
R302	1-216-829-11	METAL CHIP	4.7K	5%	1/16W	
R304	1-216-833-11	METAL CHIP	10K	5%	1/16W	
R306	1-216-821-11	METAL CHIP	1K	5%	1/16W	
R307	1-216-797-11	METAL CHIP	10	5%	1/16W	
R308	1-216-829-11	METAL CHIP	4.7K	5%	1/16W	
R309	1-216-835-11	METAL CHIP	15K	5%	1/16W	
R310	1-216-831-11	METAL CHIP	6.8K	5%	1/16W	
R311	1-216-837-11	METAL CHIP	22K	5%	1/16W	
R312	1-216-833-11	METAL CHIP	10K	5%	1/16W	
R313	1-216-833-11	METAL CHIP	10K	5%	1/16W	
R314	1-216-843-11	METAL CHIP	68K	5%	1/16W	
R315	1-216-845-11	METAL CHIP	100K	5%	1/16W	
R316	1-216-789-11	METAL CHIP	2.2	5%	1/16W	
R317	1-216-857-11	METAL CHIP	1M	5%	1/16W	
R318	1-216-857-11	METAL CHIP	1M	5%	1/16W	
R319	1-216-833-11	METAL CHIP	10K	5%	1/16W	
R320	1-216-837-11	METAL CHIP	22K	5%	1/16W	
R321	1-216-817-11	METAL CHIP	470	5%	1/16W	
R322	1-216-833-11	METAL CHIP	10K	5%	1/16W	
R323	1-216-839-11	METAL CHIP	33K	5%	1/16W	
R401	1-216-831-11	METAL CHIP	6.8K	5%	1/16W	
R402	1-216-837-11	METAL CHIP	22K	5%	1/16W	
R403	1-216-813-11	METAL CHIP	220	5%	1/16W	
R404	1-216-797-11	METAL CHIP	10	5%	1/16W	
R405	1-216-827-11	METAL CHIP	3.3K	5%	1/16W	
R406	1-218-870-11	METAL CHIP	9.1K	0.50%	1/16W	
R407	1-218-700-11	METAL CHIP	2.2K	0.50%	1/16W	
R410	1-216-845-11	METAL CHIP	100K	5%	1/16W	
R411	1-217-671-11	METAL CHIP	1	5%	1/10W	
R412	1-217-671-11	METAL CHIP	1	5%	1/10W	
R413	1-216-829-11	METAL CHIP	4.7K	5%	1/16W	
R414	1-216-809-11	METAL CHIP	100	5%	1/16W	
R415	1-218-717-11	METAL CHIP	11K	0.50%	1/16W	
R416	1-216-833-11	METAL CHIP	10K	5%	1/16W	
R417	1-218-724-11	METAL CHIP	22K	0.50%	1/16W	
R418	1-218-717-11	METAL CHIP	11K	0.50%	1/16W	
R419	1-216-833-11	METAL CHIP	10K	5%	1/16W	
R420	1-218-740-11	METAL CHIP	100K	0.50%	1/16W	
R421	1-216-815-11	METAL CHIP	330	5%	1/16W	
R422	1-216-855-11	METAL CHIP	680K	5%	1/16W	
R423	1-216-856-11	METAL CHIP	820K	5%	1/16W	
R424	1-216-855-11	METAL CHIP	680K	5%	1/16W	
R425	1-216-858-11	METAL GLAZE	1.2M	5%	1/16W	
R426	1-216-862-11	METAL GLAZE	2.7M	5%	1/16W	
R427	1-216-855-11	METAL CHIP	680K	5%	1/16W	
R428	1-216-862-11	METAL GLAZE	2.7M	5%	1/16W	
R429	1-216-836-11	METAL CHIP	18K	5%	1/16W	
R430	1-216-837-11	METAL CHIP	22K	5%	1/16W	
R431	1-216-845-11	METAL CHIP	100K	5%	1/16W	
R432	1-216-845-11	METAL CHIP	100K	5%	1/16W	
R433	1-216-831-11	METAL CHIP	6.8K	5%	1/16W	
R434	1-216-834-11	METAL CHIP	12K	5%	1/16W	
R435	1-216-855-11	METAL CHIP	680K	5%	1/16W	
R436	1-216-854-11	METAL CHIP	560K	5%	1/16W	
R437	1-216-855-11	METAL CHIP	680K	5%	1/16W	
R438	1-216-837-11	METAL CHIP	22K	5%	1/16W	
R439	1-216-833-11	METAL CHIP	10K	5%	1/16W	
R440	1-218-332-11	METAL GLAZE	130K	5%	1/16W	
R441	1-216-857-11	METAL CHIP	1M	5%	1/16W	

MAIN

Ref. No.	Part No.	Description			Remark
R442	1-216-861-11	METAL CHIP	2.2M	5%	1/16W
R443	1-216-845-11	METAL CHIP	100K	5%	1/16W
R444	1-216-853-11	METAL CHIP	470K	5%	1/16W
R445	1-216-855-11	METAL CHIP	680K	5%	1/16W
R446	1-216-853-11	METAL CHIP	470K	5%	1/16W
R447	1-216-857-11	METAL CHIP	1M	5%	1/16W
R448	1-216-841-11	METAL CHIP	47K	5%	1/16W
R449	1-216-841-11	METAL CHIP	47K	5%	1/16W
R450	1-216-841-11	METAL CHIP	47K	5%	1/16W
R451	1-216-841-11	METAL CHIP	47K	5%	1/16W
R502	1-216-829-11	METAL CHIP	4.7K	5%	1/16W
R503	1-216-837-11	METAL CHIP	22K	5%	1/16W
R504	1-216-831-11	METAL CHIP	6.8K	5%	1/16W
R505	1-216-839-11	METAL CHIP	33K	5%	1/16W
R506	1-216-831-11	METAL CHIP	6.8K	5%	1/16W
R507	1-216-833-11	METAL CHIP	10K	5%	1/16W
R508	1-216-845-11	METAL CHIP	100K	5%	1/16W
R509	1-216-829-11	METAL CHIP	4.7K	5%	1/16W
R510	1-216-829-11	METAL CHIP	4.7K	5%	1/16W
R511	1-216-841-11	METAL CHIP	47K	5%	1/16W
R512	1-216-826-11	METAL CHIP	2.7K	5%	1/16W
R513	1-216-308-00	METAL CHIP	4.7	5%	1/10W
R514	1-216-821-11	METAL CHIP	1K	5%	1/16W
R515	1-216-864-11	METAL CHIP	0	5%	1/16W
R516	1-216-833-11	METAL CHIP	10K	5%	1/16W
R517	1-216-829-11	METAL CHIP	4.7K	5%	1/16W
R518	1-216-845-11	METAL CHIP	100K	5%	1/16W
R519	1-216-841-11	METAL CHIP	47K	5%	1/16W
R520	1-216-811-11	METAL CHIP	150	5%	1/16W
R521	1-216-837-11	METAL CHIP	22K	5%	1/16W
R522	1-216-857-11	METAL CHIP	1M	5%	1/16W
R523	1-216-851-11	METAL CHIP	330K	5%	1/16W
R524	1-216-831-11	METAL CHIP	6.8K	5%	1/16W
R525	1-216-821-11	METAL CHIP	1K	5%	1/16W
R526	1-216-845-11	METAL CHIP	100K	5%	1/16W
R527	1-216-821-11	METAL CHIP	1K	5%	1/16W
R528	1-218-735-11	METAL CHIP	62K	0.50%	1/16W
R529	1-216-849-11	METAL CHIP	220K	5%	1/16W
R530	1-216-857-11	METAL CHIP	1M	5%	1/16W
R531	1-216-845-11	METAL CHIP	100K	5%	1/16W
R532	1-216-837-11	METAL CHIP	22K	5%	1/16W
R533	1-216-831-11	METAL CHIP	6.8K	5%	1/16W
R534	1-216-825-11	METAL CHIP	2.2K	5%	1/16W
R535	1-216-829-11	METAL CHIP	4.7K	5%	1/16W
R538	1-216-837-11	METAL CHIP	22K	5%	1/16W
R539	1-216-849-11	METAL CHIP	220K	5%	1/16W
R540	1-216-833-11	METAL CHIP	10K	5%	1/16W
R541	1-216-829-11	METAL CHIP	4.7K	5%	1/16W
R542	1-216-857-11	METAL CHIP	1M	5%	1/16W
R543	1-216-833-11	METAL CHIP	10K	5%	1/16W
R545	1-216-825-11	METAL CHIP	2.2K	5%	1/16W
R546	1-216-825-11	METAL CHIP	2.2K	5%	1/16W
R547	1-216-827-11	METAL CHIP	3.3K	5%	1/16W
R548	1-218-716-11	METAL CHIP	10K	0.50%	1/16W
R549	1-218-716-11	METAL CHIP	10K	0.50%	1/16W
R550	1-216-833-11	METAL CHIP	10K	5%	1/16W
R551	1-216-815-11	METAL CHIP	330	5%	1/16W
R552	1-217-671-11	METAL CHIP	1	5%	1/10W
R553	1-217-671-11	METAL CHIP	1	5%	1/10W
R554	1-216-827-11	METAL CHIP	3.3K	5%	1/16W
R555	1-216-845-11	METAL CHIP	100K	5%	1/16W
R561	1-216-813-11	METAL CHIP	220	5%	1/16W
R562	1-216-835-11	METAL CHIP	15K	5%	1/16W
R563	1-216-829-11	METAL CHIP	4.7K	5%	1/16W
R564	1-216-835-11	METAL CHIP	15K	5%	1/16W
R566	1-216-837-11	METAL CHIP	22K	5%	1/16W
R567	1-216-833-11	METAL CHIP	10K	5%	1/16W
R568	1-216-831-11	METAL CHIP	6.8K	5%	1/16W
R570	1-216-841-11	METAL CHIP	47K	5%	1/16W
R601	1-216-833-11	METAL CHIP	10K	5%	1/16W
R602	1-216-833-11	METAL CHIP	10K	5%	1/16W
R801	1-216-821-11	METAL CHIP	1K	5%	1/16W
R802	1-216-821-11	METAL CHIP	1K	5%	1/16W
R803	1-218-345-11	METAL GLAZE	9.1K	5%	1/16W
R804	1-216-833-11	METAL CHIP	10K	5%	1/16W
R806	1-216-821-11	METAL CHIP	1K	5%	1/16W
R807	1-216-821-11	METAL CHIP	1K	5%	1/16W
R808	1-216-821-11	METAL CHIP	1K	5%	1/16W
R809	1-216-833-11	METAL CHIP	10K	5%	1/16W
R810	1-216-829-11	METAL CHIP	4.7K	5%	1/16W
R811	1-216-827-11	METAL CHIP	3.3K	5%	1/16W
R812	1-216-825-11	METAL CHIP	2.2K	5%	1/16W
R813	1-218-716-11	METAL CHIP	10K	0.50%	1/16W
R814	1-216-813-11	METAL CHIP	220	5%	1/16W
R815	1-216-813-11	METAL CHIP	220	5%	1/16W
R816	1-216-813-11	METAL CHIP	220	5%	1/16W
R817	1-216-861-11	METAL CHIP	2.2M	5%	1/16W
R818	1-216-854-11	METAL CHIP	560K	5%	1/16W
R819	1-216-857-11	METAL CHIP	1M	5%	1/16W
R820	1-216-857-11	METAL CHIP	1M	5%	1/16W
R821	1-216-821-11	METAL CHIP	1K	5%	1/16W
R822	1-216-831-11	METAL CHIP	6.8K	5%	1/16W
R823	1-216-837-11	METAL CHIP	22K	5%	1/16W
R824	1-216-857-11	METAL CHIP	1M	5%	1/16W
R825	1-216-857-11	METAL CHIP	1M	5%	1/16W
R826	1-216-857-11	METAL CHIP	1M	5%	1/16W

Ref. No.	Part No.	Description	Remark
		< VARIABLE RESISTOR >	
RV301	1-230-485-11	RES, VAR, CARBON 10K/10K (VOLUME)	
RV502	1-223-586-11	RES, ADJ, CARBON 10K (TRACKING BALANCE)	
RV503	1-223-587-11	RES, ADJ, CARBON 22K (FOCUS GAIN)	
RV504	1-223-587-11	RES, ADJ, CARBON 22K (TRACKING GAIN)	
		< SWITCH >	
S301	1-572-922-11	SWITCH, SLIDE (AVLS)	
S801	1-692-088-11	SWITCH, TACTILE (⏮/▶)	
S802	1-692-088-11	SWITCH, TACTILE (⏭/▶)	
S803	1-692-088-11	SWITCH, TACTILE (■)	
S804	1-692-088-11	SWITCH, TACTILE (CHARGE)	
S805	1-572-922-11	SWITCH, SLIDE (RESUME)	
S806	1-572-922-11	SWITCH, SLIDE (HOLD)	
S807	1-572-922-11	SWITCH, SLIDE (ESP)	
S809	1-692-366-11	SWITCH, PUSH (1 KEY) (OPEN)	
		< TRANSFORMER >	
T401	1-427-677-11	TRANSFORMER, DC-DC CONVERTER	
		< VIBRATOR >	
X301	1-760-254-21	VIBRATOR, CERAMIC (16.9344MHz)	
X801	1-579-063-21	VIBRATOR, CERAMIC (4.19MHz)	
*	1-657-773-11	RST BOARD (Included in MAIN BOARD, COMPLETE)	
		*********	
		< CAPACITOR >	
C650	1-164-156-11	CERAMIC CHIP 0.1uF	25V
C651	1-162-964-11	CERAMIC CHIP 0.001uF 10%	50V
		< TRANSISTOR >	
Q650	8-729-928-87	TRANSISTOR DTC124EE	
		< RESISTOR >	
R650	1-216-833-11	METAL CHIP 10K 5% 1/16W	
		MISCELLANEOUS	
		**********	
102	1-769-130-31	LEAD (WITH CONNECTOR)	
107	1-656-318-11	SLIDE FLEXIBLE BOARD	
⚠113	X-4946-311-1	DEVICE, OPTICAL (DAX-01A)	
M901	1-698-469-11	MOTOR (SPINDLE)	
M902	A-3303-316-A	MOTOR ASSY, SLED	
S901	1-571-099-11	SWITCH (1 KEY) (LIMIT)	

Ref. No.	Part No.	Description	Remark
		ACCESSORIES & PACKING MATERIALS	
		**********	
⚠	1-467-008-11	ADAPTOR, AC (AC-E455D) (AEP)	
⚠	1-467-009-11	ADAPTOR, AC (AC-E455) (CND)	
⚠	1-467-013-11	ADAPTOR, AC (AC-E455) (UK)	
⚠	1-467-550-11	ADAPTOR, AC (AC-E455A) (E, JE)	
	1-569-007-11	ADAPTER, CONVERSION 2P (E, JE)	
	1-751-419-11	CORD, CONNECTION (EXCEPT JE)	
	1-759-042-11	BATTERY CASE	
	3-800-034-01	MANUAL, INSTRUCTION (JAPANESE) (JE)	
	3-800-034-11	MANUAL, INSTRUCTION (SPANISH) (AEP, E, JE)	
	3-800-034-21	MANUAL, INSTRUCTION (ENGLISH)	
	3-800-034-31	MANUAL, INSTRUCTION (FRENCH) (CND, AEP, JE)	
	3-800-034-41	MANUAL, INSTRUCTION (DUTCH) (AEP)	
	3-800-034-51	MANUAL, INSTRUCTION (SWEDISH) (AEP)	
	3-800-034-61	MANUAL, INSTRUCTION (PORTUGUESE) (AEP)	
	3-800-034-71	MANUAL, INSTRUCTION (GERMAN) (AEP)	
	3-800-034-81	MANUAL, INSTRUCTION (ITALIAN) (AEP)	
	3-800-034-91	MANUAL, INSTRUCTION (CHINESE, KOREAN) (JE)	
	4-970-698-01	CASE, CARRYING	
*	4-971-428-01	CASE, INDIVIDUAL (JE)	
*	4-971-433-01	CASE, INDIVIDUAL (AEP, UK)	
*	4-971-435-01	CUSHION (CND, E)	
*	4-971-436-01	INDIVIDUAL CARTON (CND, E)	
	8-952-628-00	REMOTE COMMANDER RM-DM20L SET	
	8-953-537-91	HEADPHONE MDR-E741MP//K1 SET	

The components identified by mark ⚠ or dotted line with mark ⚠ are critical for safety. Replace only with part number specified.	Les composants identifiés par une marque ⚠ sont critiques pour la sécurité. Ne les remplacer que par une pièce portant le numéro spécifié.

English
95D0590-1
Printed in Japan
© 1995. 4

9-960-160-11

Sony Corporation
Consumer A&V Products Company
Personal A&V Products Div.

Published by Home A&V Products Div.
Quality Engineering Dept.

D-777

SONY

SERVICE MANUAL

Canadian Model
AEP Model
UK Model
E Model
Tourist Model

SUPPLEMENT-1

File this supplement with the service manual.

Subject: Board Modification

(ENG-96010)

Main board has been changed in the production.
At the same time, RST board has been deleted.

- **New/Former Discrimination**

[MAIN BOARD] (SIDE B)

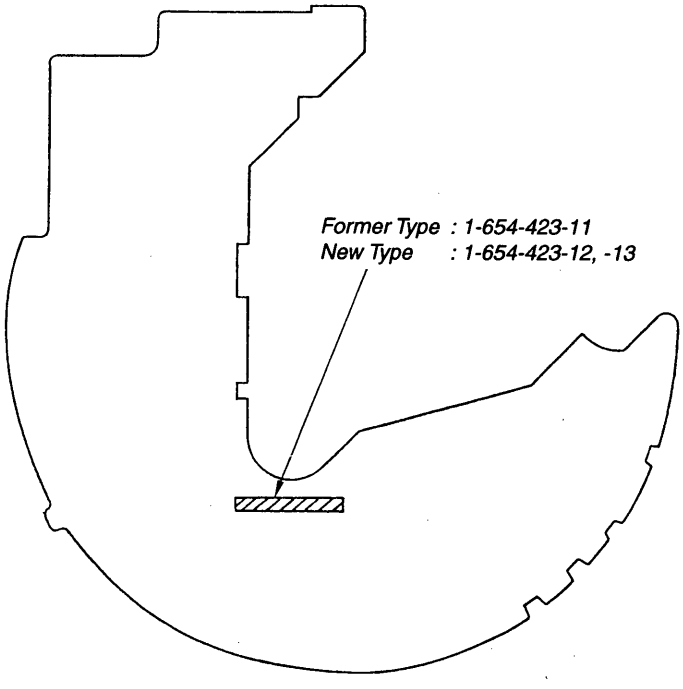

1. EXPLODED VIEW

☛: Indicates changed portion

page	Former			New		
	Ref. No.	Part No.	Description	Ref. No.	Part No.	Description
30	*61	1-657-773-11	RST BOARD		———	

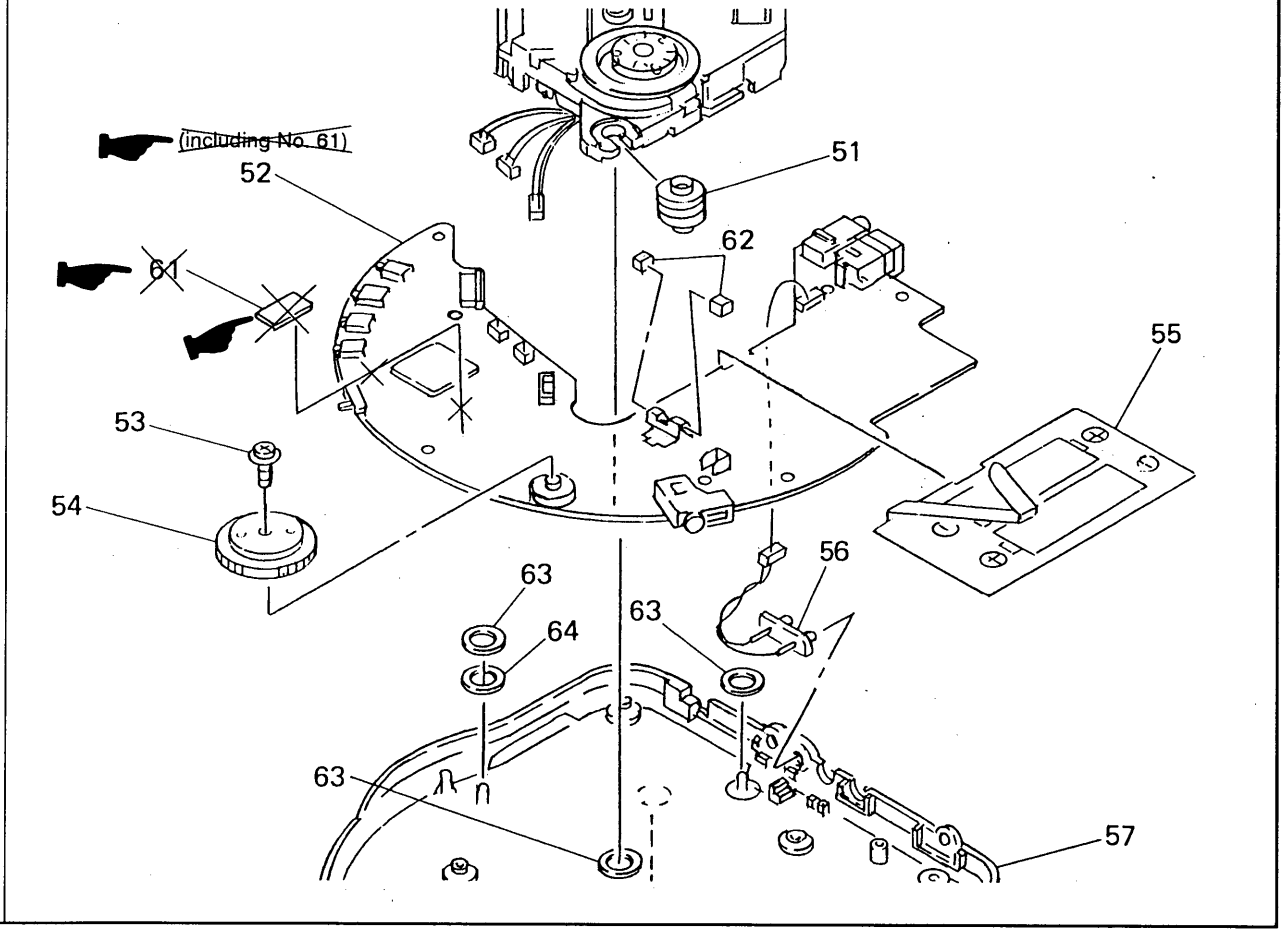

2. ELECTRICAL PARTS LIST

NOTE:

- Due to standardization, replacements in the parts list may be different from the parts specified in the diagrams or the components used on the set.
- -XX and -X mean standardized parts, so they may have some difference from the original one.
- RESISTORS
  All resistors are in ohms.
  METAL:Metal-film resistor.
  METAL OXIDE: Metal oxide-film resistor.
  F:nonflammable
- Items marked "*" are not stocked since they are seldom required for routine service. Some delay should be anticipated when ordering these items.
- SEMICONDUCTORS
  In each case, u:μ, for example:
  uA ..: μA.. uPA..: μPA..
  uPB..: μPB.. uPC..: μPC.. uPD..: μPD..
- CAPACITORS
  uF: μF
- COILS
  uH: μH

When indicating parts by reference number, please include the board.

Ref. No.	Part No.	Description			Remark
	A-3269-752-A	MAIN BOARD, COMPLETE			
		**********			
	4-969-377-01	TERMINAL (+), BATTERY			
	4-969-378-01	TERMINAL (-), BATTERY			
		< CAPACITOR >			
C101	1-135-201-11	TANTALUM CHIP	10uF	20%	4V
C102	1-162-966-11	CERAMIC CHIP	0.0022uF	10%	50V
C103	1-135-151-21	TANTALUM CHIP	4.7uF	20%	4V
C104	1-164-161-11	CERAMIC CHIP	0.0022uF	10%	100V
C105	1-164-346-11	CERAMIC CHIP	1uF		16V
C106	1-164-489-11	CERAMIC CHIP	0.22uF	10%	16V
C107	1-165-176-11	CERAMIC CHIP	0.047uF	10%	16V
C201	1-135-201-11	TANTALUM CHIP	10uF	20%	4V
C202	1-162-966-11	CERAMIC CHIP	0.0022uF	10%	50V
C203	1-135-151-21	TANTALUM CHIP	4.7uF	20%	4V
C204	1-164-161-11	CERAMIC CHIP	0.0022uF	10%	100V
C205	1-164-346-11	CERAMIC CHIP	1uF		16V
C206	1-164-489-11	CERAMIC CHIP	0.22uF	10%	16V
C207	1-165-176-11	CERAMIC CHIP	0.047uF	10%	16V
C301	1-104-847-11	TANTAL. CHIP	22uF	20%	4V
C302	1-104-847-11	TANTAL. CHIP	22uF	20%	4V
C303	1-104-847-11	TANTAL. CHIP	22uF	20%	4V
C304	1-104-847-11	TANTAL. CHIP	22uF	20%	4V
C305	1-162-919-11	CERAMIC CHIP	22PF	5%	50V
C306	1-162-916-11	CERAMIC CHIP	12PF	5%	50V
C307	1-163-038-00	CERAMIC CHIP	0.1uF		25V
C308	1-163-031-11	CERAMIC CHIP	0.01uF		50V
C309	1-104-847-11	TANTAL. CHIP	22uF	20%	4V
C310	1-104-847-11	TANTAL. CHIP	22uF	20%	4V
C311	1-164-156-11	CERAMIC CHIP	0.1uF		25V
C312	1-164-156-11	CERAMIC CHIP	0.1uF		25V
C313	1-165-176-11	CERAMIC CHIP	0.047uF	10%	16V
C314	1-164-156-11	CERAMIC CHIP	0.1uF		25V
C315	1-135-180-21	TANTALUM CHIP	3.3uF	20%	6.3V
C316	1-135-151-21	TANTALUM CHIP	4.7uF	20%	4V
C317	1-135-151-21	TANTALUM CHIP	4.7uF	20%	4V
C318	1-104-847-11	TANTAL. CHIP	22uF	20%	4V
C319	1-104-847-11	TANTAL. CHIP	22uF	20%	4V
C320	1-164-346-11	CERAMIC CHIP	1uF		16V
C322	1-135-149-21	TANTALUM CHIP	2.2uF	20%	10V
C323	1-135-201-11	TANTALUM CHIP	10uF	20%	4V
C324	1-164-156-11	CERAMIC CHIP	0.1uF		25V
C325	1-135-151-21	TANTALUM CHIP	4.7uF	20%	4V
C326	1-162-953-11	CERAMIC CHIP	100PF	5%	50V
C327	1-162-974-11	CERAMIC CHIP	0.01uF		50V
C328	1-164-005-11	CERAMIC CHIP	0.47uF		25V
C329	1-135-151-21	TANTALUM CHIP	4.7uF	20%	4V
C330	1-164-489-11	CERAMIC CHIP	0.22uF	10%	16V
C331	1-164-156-11	CERAMIC CHIP	0.1uF		25V
C332	1-164-156-11	CERAMIC CHIP	0.1uF		25V
C401	1-104-752-11	TANTAL. CHIP	33uF	20%	6.3V
C402	1-162-966-11	CERAMIC CHIP	0.0022uF	10%	50V
C403	1-162-949-11	CERAMIC CHIP	47PF	5%	50V
C404	1-164-346-11	CERAMIC CHIP	1uF		16V
C405	1-104-752-11	TANTAL. CHIP	33uF	20%	6.3V
C406	1-104-908-11	TANTAL. CHIP	47uF	20%	4V
C407	1-164-156-11	CERAMIC CHIP	0.1uF		25V
C408	1-104-847-11	TANTAL. CHIP	22uF	20%	4V
C411	1-135-151-21	TANTALUM CHIP	4.7uF	20%	4V
C412	1-164-156-11	CERAMIC CHIP	0.1uF		25V
C413	1-104-913-11	TANTAL. CHIP	10uF	20%	16V
C414	1-164-346-11	CERAMIC CHIP	1uF		16V
C415	1-162-964-11	CERAMIC CHIP	0.001uF	10%	50V
C416	1-164-156-11	CERAMIC CHIP	0.1uF		25V
C417	1-162-974-11	CERAMIC CHIP	0.01uF		50V
C418	1-162-974-11	CERAMIC CHIP	0.01uF		50V
C420	1-162-974-11	CERAMIC CHIP	0.01uF		50V
C421	1-162-974-11	CERAMIC CHIP	0.01uF		50V
C422	1-162-970-11	CERAMIC CHIP	0.01uF	10%	25V
C501	1-164-156-11	CERAMIC CHIP	0.1uF		25V
C502	1-104-847-11	TANTAL. CHIP	22uF	20%	4V

MAIN

Ref. No.	Part No.	Description		Remark	
C503	1-104-908-11	TANTAL. CHIP	47uF	20%	4V
C504	1-162-939-11	CERAMIC CHIP	8PF	0.5PF	50V
C505	1-162-974-11	CERAMIC CHIP	0.01uF		50V
C506	1-164-362-11	CERAMIC CHIP	470PF	5%	50V
C507	1-162-967-11	CERAMIC CHIP	0.0033uF	10%	50V
C508	1-165-176-11	CERAMIC CHIP	0.047uF	10%	16V
C510	1-135-149-21	TANTALUM CHIP	2.2uF	20%	10V
C511	1-104-847-11	TANTAL. CHIP	22uF	20%	4V
C512	1-162-966-11	CERAMIC CHIP	0.0022uF	10%	50V
C513	1-162-966-11	CERAMIC CHIP	0.0022uF	10%	50V
C514	1-164-156-11	CERAMIC CHIP	0.1uF		25V
C515	1-164-346-11	CERAMIC CHIP	1uF		16V
C516	1-162-948-11	CERAMIC CHIP	39PF	5%	50V
C517	1-165-176-11	CERAMIC CHIP	0.047uF	10%	16V
C518	1-135-149-21	TANTALUM CHIP	2.2uF	20%	10V
C519	1-164-156-11	CERAMIC CHIP	0.1uF		25V
C520	1-162-966-11	CERAMIC CHIP	0.0022uF	10%	50V
C521	1-162-941-11	CERAMIC CHIP	10PF	0.5PF	50V
C522	1-109-996-11	CERAMIC CHIP	1uF		6.3V
C523	1-165-176-11	CERAMIC CHIP	0.047uF	10%	16V
C524	1-104-847-11	TANTAL. CHIP	22uF	20%	4V
C525	1-162-953-11	CERAMIC CHIP	100PF	5%	50V
C526	1-104-847-11	TANTAL. CHIP	22uF	20%	4V
C527	1-135-201-11	TANTALUM CHIP	10uF	20%	4V
C528	1-164-346-11	CERAMIC CHIP	1uF		16V
C529	1-107-826-11	CERAMIC CHIP	0.1uF	10%	16V
C530	1-164-346-11	CERAMIC CHIP	1uF		16V
C531	1-162-964-11	CERAMIC CHIP	0.001uF	10%	50V
C533	1-135-259-11	TANTAL. CHIP	10uF	20%	6.3V
C534	1-135-148-21	TANTAL. CHIP	1.5uF	20%	16V
C535	1-164-156-11	CERAMIC CHIP	0.1uF		25V
C536	1-135-259-11	TANTAL. CHIP	10uF	20%	6.3V
C537	1-164-346-11	CERAMIC CHIP	1uF		16V
C538	1-162-970-11	CERAMIC CHIP	0.01uF	10%	25V
C539	1-164-346-11	CERAMIC CHIP	1uF		16V
C540	1-164-346-11	CERAMIC CHIP	1uF		16V
C541	1-164-156-11	CERAMIC CHIP	0.1uF		25V
C542	1-164-489-11	CERAMIC CHIP	0.22uF	10%	16V
C543	1-164-346-11	CERAMIC CHIP	1uF		16V
C544	1-164-473-11	CERAMIC CHIP	820PF	5%	50V
C545	1-164-346-11	CERAMIC CHIP	1uF		16V
C546	1-164-005-11	CERAMIC CHIP	0.47uF		25V
C547	1-164-362-11	CERAMIC CHIP	470PF	5%	50V
C548	1-135-091-00	TANTAL. CHIP	1uF	20%	16V
C549	1-164-156-11	CERAMIC CHIP	0.1uF		25V
C550	1-135-259-11	TANTAL. CHIP	10uF	20%	6.3V
C551	1-164-156-11	CERAMIC CHIP	0.1uF		25V
C552	1-162-969-11	CERAMIC CHIP	0.0068uF	10%	25V
C553	1-164-227-11	CERAMIC CHIP	0.022uF	10%	25V
C554	1-162-969-11	CERAMIC CHIP	0.0068uF	10%	25V
C555	1-164-005-11	CERAMIC CHIP	0.47uF		25V
C556	1-162-964-11	CERAMIC CHIP	0.001uF	10%	50V
C557	1-162-964-11	CERAMIC CHIP	0.001uF	10%	50V
C558	1-162-964-11	CERAMIC CHIP	0.001uF	10%	50V
C560	1-164-005-11	CERAMIC CHIP	0.47uF		25V
C561	1-135-073-00	TANTALUM CHIP	0.33uF	10%	35V
C562	1-162-967-11	CERAMIC CHIP	0.0033uF	10%	50V
C563	1-107-826-11	CERAMIC CHIP	0.1uF	10%	16V
C564	1-135-151-21	TANTALUM CHIP	4.7uF	20%	4V
C565	1-164-156-11	CERAMIC CHIP	0.1uF		25V
C566	1-164-346-11	CERAMIC CHIP	1uF		16V
C567	1-162-966-11	CERAMIC CHIP	0.0022uF	10%	50V
C568	1-162-966-11	CERAMIC CHIP	0.0022uF	10%	50V
C570	1-135-151-21	TANTALUM CHIP	4.7uF	20%	4V
C572	1-107-826-11	CERAMIC CHIP	0.1uF	10%	16V
C573	1-164-156-11	CERAMIC CHIP	0.1uF		25V
C574	1-162-941-11	CERAMIC CHIP	10PF	0.5PF	50V
C575	1-162-939-11	CERAMIC CHIP	8PF	0.5PF	50V
C578	1-162-953-11	CERAMIC CHIP	100PF	5%	50V
C579	1-164-346-11	CERAMIC CHIP	1uF		16V
C601	1-164-156-11	CERAMIC CHIP	0.1uF		25V
C602	1-164-156-11	CERAMIC CHIP	0.1uF		25V
C604	1-164-346-11	CERAMIC CHIP	1uF		16V
C605	1-164-156-11	CERAMIC CHIP	0.1uF		25V
C606	1-162-974-11	CERAMIC CHIP	0.01uF		50V
C801	1-164-156-11	CERAMIC CHIP	0.1uF		25V
C802	1-164-156-11	CERAMIC CHIP	0.1uF		25V
C803	1-135-201-11	TANTALUM CHIP	10uF	20%	4V
C804	1-164-156-11	CERAMIC CHIP	0.1uF		25V
C805	1-164-005-11	CERAMIC CHIP	0.47uF		25V
C806	1-135-210-11	TANTALUM CHIP	4.7uF	20%	10V
C807	1-164-005-11	CERAMIC CHIP	0.47uF		25V
C808	1-162-970-11	CERAMIC CHIP	0.01uF	10%	25V
C810	1-164-346-11	CERAMIC CHIP	1uF		16V
C811	1-164-156-11	CERAMIC CHIP	0.1uF		25V
C812	1-165-176-11	CERAMIC CHIP	0.047uF	10%	16V
C813	1-164-156-11	CERAMIC CHIP	0.1uF		25V

< CONNECTOR >

CN401	1-770-359-11	PIN, CONNECTOR (PC BOARD)	2P
CN501	1-573-354-11	CONNECTOR, FFC/FPC	14P
CN502	1-770-360-11	PIN, CONNECTOR (PC BOARD)	4P
CN503	1-770-359-41	PIN, CONNECTOR (PC BOARD)	2P
CN504	1-770-359-11	PIN, CONNECTOR (PC BOARD)	2P

< JACK >

CNJ302	1-568-758-21	JACK (Ω/REMOTE)	

Continued on page 13.

3. PRINTED WIRING BOARD

• **Semiconductor Location (Side A)**

Ref. No.	Location
D301	A-7
D302	A-7
D305	I-8
D501	G-4
D808	H-1
D809	J-4
D810	J-3
IC301	H-6
IC502	H-3
IC603	I-5
Q303	J-6
Q304	I-8
Q307	I-7
Q308	I-8
Q311	I-7
Q402	H-7
Q501	G-2
Q503	F-1
Q504	F-1

Note:

- ○—— : parts extracted from the component side.
- △ : internal component.
- ▒▒▒ : Pattern from the side which enables seeing. (The other layers' patterns are not indicated.)

Caution:	
Pattern face side: (Side B)	Parts on the pattern face side seen from the pattern face are indicated.
Parts face side: (Side A)	Parts on the parts face side seen from the parts face are indicated.

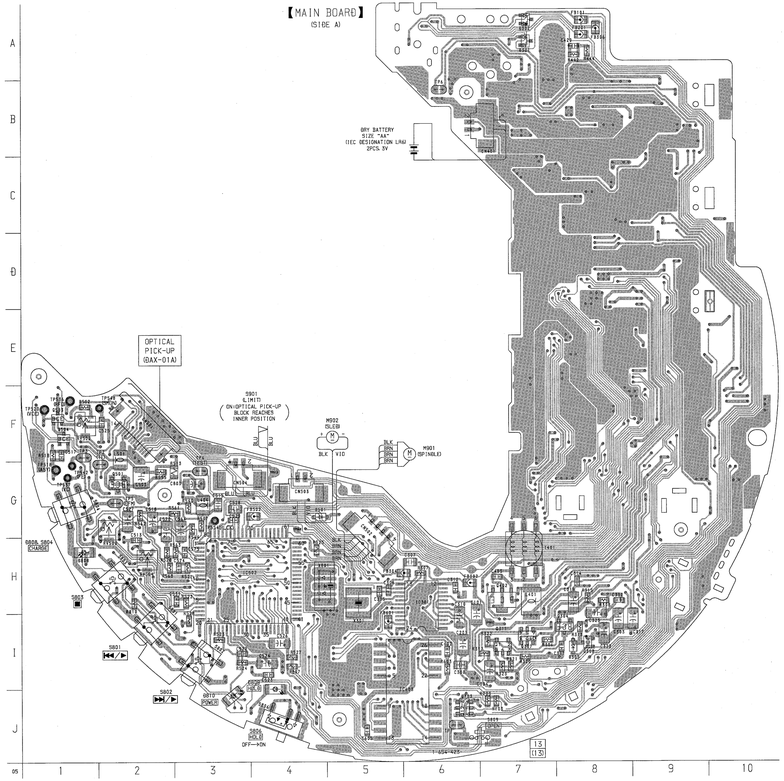

• **Semiconductor Location (Side B)**

Ref. No.	Location	Ref. No.	Location
D303	I-2	IC505	F-2
D304	H-2	IC506	E-2
D306	H-2	IC507	D-3
D401	A-5	IC601	I-5
D402	C-3	IC801	H-7
D403	E-1		
D404	G-2	Q301	I-4
D405	C-2	Q302	I-4
D406	B-2	Q305	C-2
D407	A-4	Q306	I-3
D408	A-3	Q309	I-3
D409	A-4	Q310	I-3
D502	E-2	Q401	I-4
D503	E-1	Q403	B-3
D504	E-1	Q404	B-2
D601	H-6	Q405	B-2
D801	I-8	Q406	A-2
D803	G-1	Q407	B-2
D804	G-1	Q408	B-4
D805	G-1	Q409	B-2
D806	D-3	Q410	B-2
D807	C-2	Q411	C-2
D811	I-8	Q412	B-4
		Q502	D-2
IC302	H-3	Q511	H-9
IC401	C-3	Q601	H-5
IC402	B-3	Q801	I-8
IC403	A-3	Q802	C-3
IC501	F-9	Q804	I-4
IC503	E-3	Q805	I-9

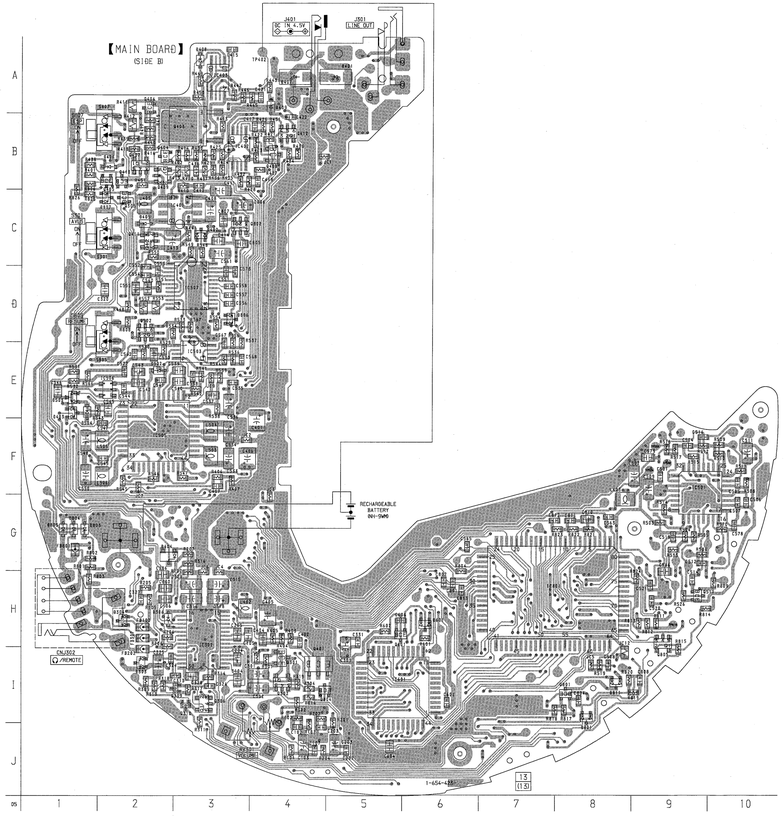

4. SCHEMATIC DIAGRAM

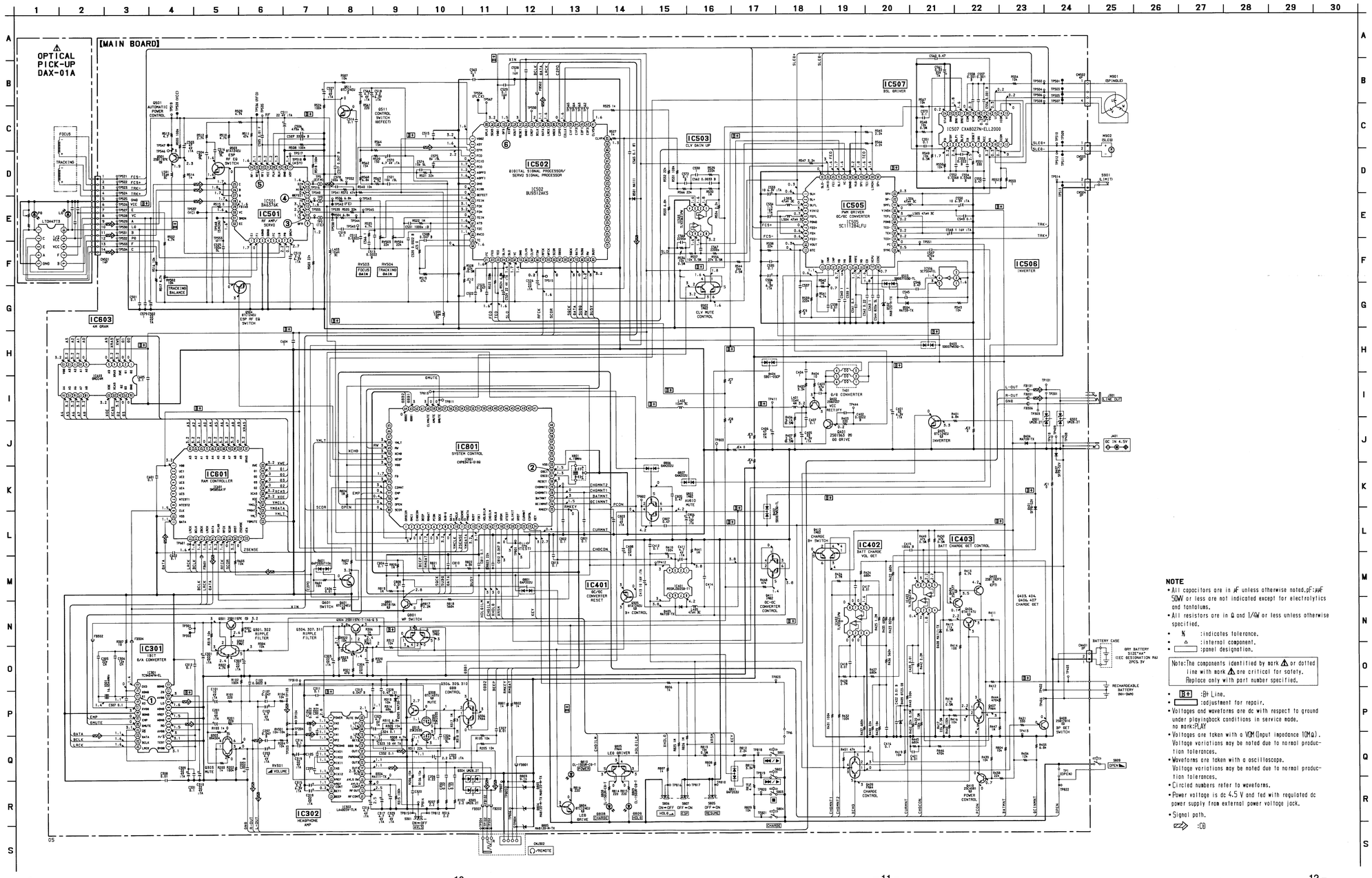

NOTE

- All capacitors are in μF unless otherwise noted.pF:μμF 50WV or less are not indicated except for electrolytics and tantalums.
- All resistors are in Ω and 1/4W or less unless otherwise specified.
- % :indicates tolerance.
- △ :internal component.
- ▭ :panel designation.

Note:The components identified by mark ⚠ or dotted line with mark ⚠ are critical for safety. Replace only with part number specified.

- B+ :B+ Line.
- ▭ :adjustment for repair.
- Voltages and waveforms are dc with respect to ground under playingback conditions in service mode. no mark:PLAY
- Voltages are taken with a VOM (Input impedance 10MΩ). Voltage variations may be noted due to normal production tolerances.
- Waveforms are taken with a oscilloscope. Voltage variations may be noted due to normal production tolerances.
- Circled numbers refer to waveforms.
- Power voltage is dc 4.5 V and fed with regulated dc power supply from external power voltage jack.
- Signal path.
  ⇨ :CD

Continued from page 4.

MAIN

Ref. No.	Part No.	Description	Remark
		< DIODE >	
D301	8-719-039-99	DIODE UMZ8.2T	
D302	8-719-039-99	DIODE UMZ8.2T	
D303	8-719-039-99	DIODE UMZ8.2T	
D304	8-719-039-99	DIODE UMZ8.2T	
D305	8-719-421-27	DIODE MA728	
D306	8-719-404-49	DIODE MA111	
D401	8-719-313-73	DIODE SFPB-52	
D402	8-719-988-78	DIODE SB007W03Q	
D403	8-719-988-78	DIODE SB007W03Q	
D404	8-719-938-72	DIODE SB01-05CP	
D405	8-719-421-27	DIODE MA728	
D406	8-719-421-27	DIODE MA728	
D407	8-719-313-73	DIODE SFPB-52	
D408	8-719-404-49	DIODE MA111	
D409	8-719-157-93	DIODE RD3.0SB2	
D501	8-719-404-49	DIODE MA111	
D502	8-719-423-35	DIODE MA8120-H-TX	
D503	8-719-023-69	DIODE SB007T03Q	
D504	8-719-421-27	DIODE MA728	
D601	8-719-941-09	DIODE DAP202U	
D801	8-719-941-09	DIODE DAP202U	
D803	8-719-423-32	DIODE MA8120-M	
D804	8-719-423-32	DIODE MA8120-M	
D805	8-719-423-32	DIODE MA8120-M	
D806	8-719-941-86	DIODE DAN202U	
D807	8-719-941-86	DIODE DAN202U	
D808	8-719-026-39	LED CL-150UR-CD (CHARGE)	
D809	8-719-026-39	LED CL-150UR-CD (HOLD)	
D810	8-719-026-39	LED CL-150UR-CD (POWER)	
D811	8-719-941-09	DIODE DAP202U	
		< FERRITE BEAD >	
FB101	1-414-135-11	INDUCTOR CHIP 0uH	
FB102	1-414-135-11	INDUCTOR CHIP 0uH	
FB201	1-414-135-11	INDUCTOR CHIP 0uH	
FB202	1-414-135-11	INDUCTOR CHIP 0uH	
FB302	1-414-135-11	INDUCTOR CHIP 0uH	
FB304	1-414-135-11	INDUCTOR CHIP 0uH	
FB306	1-414-135-11	INDUCTOR CHIP 0uH	
FB307	1-414-135-11	INDUCTOR CHIP 0uH	
FB502	1-414-135-11	INDUCTOR CHIP 0uH	
FB601	1-414-135-11	INDUCTOR CHIP 0uH	
FB801	1-414-135-11	INDUCTOR CHIP 0uH	
		< IC >	
IC301	8-759-327-78	IC TC9404FN-EL	
IC302	8-759-166-95	IC LA4805V-TLM	
IC401	8-759-297-20	IC RS5RJ3025B-T1	
IC402	8-759-252-90	IC TLV2362IPW-ELM1500	
IC403	8-759-252-90	IC TLV2362IPW-ELM1500	
IC501	8-759-335-59	IC BA6376K	
IC502	8-759-394-55	IC BU9312AKS-D345	
IC503	8-759-252-90	IC TLV2362IPW-ELM1500	
IC505	8-759-342-16	IC SC111284LFU	
IC506	8-759-031-84	IC SC7S04F	
IC507	8-759-098-52	IC CXA8027N	
IC601	8-759-351-65	IC SM5856A1F	
IC603	8-759-355-82	IC ESP10CC	
IC801	8-752-868-81	IC CXP83416-018Q	
		< JACK >	
J301	1-563-715-51	JACK (LINE OUT)	
J401	1-691-099-51	JACK, DC(POLARITY UNIFIED TYPE)(DC IN 4.5V)	
		< JUMPER RESISTOR >	
JC1	1-216-864-11	METAL CHIP 0 5% 1/16W	
JC2	1-216-864-11	METAL CHIP 0 5% 1/16W	
JC3	1-216-864-11	METAL CHIP 0 5% 1/16W	
JC4	1-216-864-11	METAL CHIP 0 5% 1/16W	
JC5	1-216-864-11	METAL CHIP 0 5% 1/16W	
JC6	1-216-864-11	METAL CHIP 0 5% 1/16W	
JC7	1-216-864-11	METAL CHIP 0 5% 1/16W	
JC8	1-216-864-11	METAL CHIP 0 5% 1/16W	
JC9	1-216-864-11	METAL CHIP 0 5% 1/16W	
JC12	1-216-295-00	CONDUCTOR, CHIP (2012)	
		< COIL >	
L401	1-414-431-11	INDUCTOR 10uH	
L402	1-414-398-11	INDUCTOR 10uH	
L403	1-414-398-11	INDUCTOR 10uH	
L404	1-414-398-11	INDUCTOR 10uH	
L405	1-414-402-11	INDUCTOR 47uH	
L501	1-414-398-11	INDUCTOR 10uH	
L503	1-414-402-11	INDUCTOR 47uH	
L504	1-414-402-11	INDUCTOR 47uH	
L505	1-414-402-11	INDUCTOR 47uH	
L506	1-414-402-11	INDUCTOR 47uH	
		< TRANSISTOR >	
Q301	8-729-904-86	TRANSISTOR 2SB1197K-Q	
Q302	8-729-903-10	TRANSISTOR FMW1	
Q303	8-729-425-18	TRANSISTOR XN4504	
Q304	8-729-904-86	TRANSISTOR 2SB1197K-Q	
Q305	8-729-905-57	TRANSISTOR DTA124EU	
Q306	8-729-902-90	TRANSISTOR FMA4	

MAIN

Ref. No.	Part No.	Description	Remark
Q307	8-729-907-39	TRANSISTOR IMD2	
Q308	8-729-922-94	TRANSISTOR DTC143TU	
Q309	8-729-024-46	TRANSISTOR 2SK2035TE85L	
Q310	8-729-024-46	TRANSISTOR 2SK2035TE85L	
Q311	8-729-903-10	TRANSISTOR FMW1	
Q401	8-729-923-36	TRANSISTOR 2SD1963-Q. R	
Q402	8-729-031-11	TRANSISTOR 2SD2537-T100VW	
Q403	8-729-921-93	TRANSISTOR 2SB1182F5-QR	
Q404	8-729-922-10	TRANSISTOR 2SA1577-QR	
Q405	8-729-905-61	TRANSISTOR DTC124EU	
Q406	8-729-905-96	TRANSISTOR DTA114TU	
Q407	8-729-902-90	TRANSISTOR FMA4	
Q408	8-729-921-73	TRANSISTOR 2SD1781K-QR	
Q409	8-729-902-90	TRANSISTOR FMA4	
Q410	8-729-905-38	TRANSISTOR 2SC4081T106R	
Q411	8-729-907-39	TRANSISTOR IMD2	
Q412	8-729-907-39	TRANSISTOR IMD2	
Q501	8-729-904-86	TRANSISTOR 2SB1197K-Q	
Q502	8-729-907-39	TRANSISTOR IMD2	
Q503	8-729-905-57	TRANSISTOR DTA124EU	
Q504	8-729-905-61	TRANSISTOR DTC124EU	
Q511	8-729-905-61	TRANSISTOR DTC124EU	
Q601	8-729-905-61	TRANSISTOR DTC124EU	
Q801	8-729-230-63	TRANSISTOR 2SC4116-YG	
Q802	8-729-907-39	TRANSISTOR IMD2	
Q804	8-729-905-61	TRANSISTOR DTC124EU	
Q805	8-729-902-90	TRANSISTOR FMA4	

< RESISTOR >

Ref. No.	Part No.	Description			Remark
R101	1-216-813-11	METAL CHIP	220	5%	1/16W
R102	1-216-845-11	METAL CHIP	100K	5%	1/16W
R103	1-216-821-11	METAL CHIP	1K	5%	1/16W
R104	1-216-833-11	METAL CHIP	10K	5%	1/16W
R105	1-216-833-11	METAL CHIP	10K	5%	1/16W
R106	1-216-835-11	METAL CHIP	15K	5%	1/16W
R107	1-216-789-11	METAL CHIP	2.2	5%	1/16W
R201	1-216-813-11	METAL CHIP	220	5%	1/16W
R202	1-216-845-11	METAL CHIP	100K	5%	1/16W
R203	1-216-821-11	METAL CHIP	1K	5%	1/16W
R204	1-216-833-11	METAL CHIP	10K	5%	1/16W
R205	1-216-833-11	METAL CHIP	10K	5%	1/16W
R206	1-216-835-11	METAL CHIP	15K	5%	1/16W
R207	1-216-789-11	METAL CHIP	2.2	5%	1/16W
R301	1-216-831-11	METAL CHIP	6.8K	5%	1/16W
R302	1-216-829-11	METAL CHIP	4.7K	5%	1/16W
R304	1-216-833-11	METAL CHIP	10K	5%	1/16W
R306	1-216-821-11	METAL CHIP	1K	5%	1/16W
R307	1-216-797-11	METAL CHIP	10	5%	1/16W
R308	1-216-829-11	METAL CHIP	4.7K	5%	1/16W
R309	1-216-835-11	METAL CHIP	15K	5%	1/16W
R310	1-216-831-11	METAL CHIP	6.8K	5%	1/16W
R311	1-216-837-11	METAL CHIP	22K	5%	1/16W
R312	1-216-833-11	METAL CHIP	10K	5%	1/16W
R313	1-216-833-11	METAL CHIP	10K	5%	1/16W
R314	1-216-843-11	METAL CHIP	68K	5%	1/16W
R315	1-216-845-11	METAL CHIP	100K	5%	1/16W
R316	1-216-789-11	METAL CHIP	2.2	5%	1/16W
R317	1-216-857-11	METAL CHIP	1M	5%	1/16W
R318	1-216-857-11	METAL CHIP	1M	5%	1/16W
R319	1-216-833-11	METAL CHIP	10K	5%	1/16W
R320	1-216-837-11	METAL CHIP	22K	5%	1/16W
R321	1-216-817-11	METAL CHIP	470	5%	1/16W
R322	1-216-833-11	METAL CHIP	10K	5%	1/16W
R323	1-216-839-11	METAL CHIP	33K	5%	1/16W
R401	1-216-831-11	METAL CHIP	6.8K	5%	1/16W
R402	1-218-724-11	METAL CHIP	22K	0.50%	1/16W
R403	1-216-813-11	METAL CHIP	220	5%	1/16W
R404	1-216-797-11	METAL CHIP	10	5%	1/16W
R405	1-216-827-11	METAL CHIP	3.3K	5%	1/16W
R406	1-218-870-11	METAL CHIP	9.1K	0.50%	1/16W
R407	1-218-700-11	METAL CHIP	2.2K	0.50%	1/16W
R410	1-216-845-11	METAL CHIP	100K	5%	1/16W
R411	1-217-671-11	METAL CHIP	1	5%	1/10W
R412	1-217-671-11	METAL CHIP	1	5%	1/10W
R413	1-216-829-11	METAL CHIP	4.7K	5%	1/16W
R414	1-216-809-11	METAL CHIP	100	5%	1/16W
R415	1-218-717-11	METAL CHIP	11K	0.50%	1/16W
R416	1-216-833-11	METAL CHIP	10K	5%	1/16W
R417	1-218-724-11	METAL CHIP	22K	0.50%	1/16W
R418	1-218-717-11	METAL CHIP	11K	0.50%	1/16W
R419	1-216-833-11	METAL CHIP	10K	5%	1/16W
R420	1-218-740-11	METAL CHIP	100K	0.50%	1/16W
R421	1-216-815-11	METAL CHIP	330	5%	1/16W
R422	1-216-855-11	METAL CHIP	680K	5%	1/16W
R423	1-216-856-11	METAL CHIP	820K	5%	1/16W
R424	1-216-855-11	METAL CHIP	680K	5%	1/16W
R425	1-216-858-11	METAL GLAZE	1.2M	5%	1/16W
R426	1-216-862-11	METAL GLAZE	2.7M	5%	1/16W
R427	1-216-855-11	METAL CHIP	680K	5%	1/16W
R428	1-216-862-11	METAL GLAZE	2.7M	5%	1/16W
R429	1-216-836-11	METAL CHIP	18K	5%	1/16W
R430	1-216-837-11	METAL CHIP	22K	5%	1/16W
R431	1-216-845-11	METAL CHIP	100K	5%	1/16W
R432	1-216-845-11	METAL CHIP	100K	5%	1/16W
R433	1-216-831-11	METAL CHIP	6.8K	5%	1/16W
R434	1-216-834-11	METAL CHIP	12K	5%	1/16W
R435	1-216-855-11	METAL CHIP	680K	5%	1/16W

Ref. No.	Part No.	Description				Remark
R436	1-216-854-11	METAL CHIP	560K	5%	1/16W	
R437	1-216-855-11	METAL CHIP	680K	5%	1/16W	
R438	1-216-837-11	METAL CHIP	22K	5%	1/16W	
R439	1-216-833-11	METAL CHIP	10K	5%	1/16W	
R440	1-218-332-11	METAL GLAZE	130K	5%	1/16W	
R441	1-216-857-11	METAL CHIP	1M	5%	1/16W	
R442	1-216-861-11	METAL CHIP	2.2M	5%	1/16W	
R443	1-216-845-11	METAL CHIP	100K	5%	1/16W	
R444	1-216-853-11	METAL CHIP	470K	5%	1/16W	
R445	1-216-855-11	METAL CHIP	680K	5%	1/16W	
R446	1-216-853-11	METAL CHIP	470K	5%	1/16W	
R447	1-216-857-11	METAL CHIP	1M	5%	1/16W	
R448	1-216-841-11	METAL CHIP	47K	5%	1/16W	
R449	1-218-732-11	METAL CHIP	47K	0.50%	1/16W	
R450	1-218-732-11	METAL CHIP	47K	0.50%	1/16W	
R451	1-216-841-11	METAL CHIP	47K	5%	1/16W	
R502	1-216-829-11	METAL CHIP	4.7K	5%	1/16W	
R503	1-216-837-11	METAL CHIP	22K	5%	1/16W	
R504	1-216-831-11	METAL CHIP	6.8K	5%	1/16W	
R505	1-216-839-11	METAL CHIP	33K	5%	1/16W	
R506	1-216-831-11	METAL CHIP	6.8K	5%	1/16W	
R507	1-216-833-11	METAL CHIP	10K	5%	1/16W	
R508	1-216-845-11	METAL CHIP	100K	5%	1/16W	
R509	1-216-829-11	METAL CHIP	4.7K	5%	1/16W	
R510	1-216-829-11	METAL CHIP	4.7K	5%	1/16W	
R511	1-216-841-11	METAL CHIP	47K	5%	1/16W	
R512	1-216-826-11	METAL CHIP	2.7K	5%	1/16W	
R513	1-216-308-00	METAL CHIP	4.7	5%	1/10W	
R514	1-216-821-11	METAL CHIP	1K	5%	1/16W	
R515	1-216-864-11	METAL CHIP	0	5%	1/16W	
R516	1-216-833-11	METAL CHIP	10K	5%	1/16W	
R517	1-216-829-11	METAL CHIP	4.7K	5%	1/16W	
R518	1-216-845-11	METAL CHIP	100K	5%	1/16W	
R519	1-216-841-11	METAL CHIP	47K	5%	1/16W	
R520	1-216-811-11	METAL CHIP	150	5%	1/16W	
R521	1-216-837-11	METAL CHIP	22K	5%	1/16W	
R522	1-216-857-11	METAL CHIP	1M	5%	1/16W	
R523	1-216-851-11	METAL CHIP	330K	5%	1/16W	
R524	1-216-827-11	METAL CHIP	3.3K	5%	1/16W	
R525	1-216-821-11	METAL CHIP	1K	5%	1/16W	
R526	1-216-845-11	METAL CHIP	100K	5%	1/16W	
R527	1-216-821-11	METAL CHIP	1K	5%	1/16W	
R528	1-218-735-11	METAL CHIP	62K	0.50%	1/16W	
R529	1-216-849-11	METAL CHIP	220K	5%	1/16W	
R530	1-216-857-11	METAL CHIP	1M	5%	1/16W	
R531	1-216-845-11	METAL CHIP	100K	5%	1/16W	
R532	1-216-837-11	METAL CHIP	22K	5%	1/16W	
R533	1-216-831-11	METAL CHIP	6.8K	5%	1/16W	
R534	1-216-825-11	METAL CHIP	2.2K	5%	1/16W	
R535	1-216-829-11	METAL CHIP	4.7K	5%	1/16W	
R536	1-218-716-11	METAL CHIP	10K	0.50%	1/16W	
R537	1-218-716-11	METAL CHIP	10K	0.50%	1/16W	
R538	1-216-837-11	METAL CHIP	22K	5%	1/16W	
R539	1-216-849-11	METAL CHIP	220K	5%	1/16W	
R540	1-216-833-11	METAL CHIP	10K	5%	1/16W	
R541	1-216-829-11	METAL CHIP	4.7K	5%	1/16W	
R542	1-216-857-11	METAL CHIP	1M	5%	1/16W	
R543	1-216-833-11	METAL CHIP	10K	5%	1/16W	
R544	1-218-725-11	METAL CHIP	24K	0.50%	1/16W	
R545	1-216-825-11	METAL CHIP	2.2K	5%	1/16W	
R546	1-216-825-11	METAL CHIP	2.2K	5%	1/16W	
R547	1-216-827-11	METAL CHIP	3.3K	5%	1/16W	
R548	1-218-716-11	METAL CHIP	10K	0.50%	1/16W	
R549	1-218-716-11	METAL CHIP	10K	0.50%	1/16W	
R550	1-216-833-11	METAL CHIP	10K	5%	1/16W	
R551	1-216-815-11	METAL CHIP	330	5%	1/16W	
R552	1-217-671-11	METAL CHIP	1	5%	1/10W	
R553	1-217-671-11	METAL CHIP	1	5%	1/10W	
R554	1-216-833-11	METAL CHIP	10K	5%	1/16W	
R555	1-216-845-11	METAL CHIP	100K	5%	1/16W	
R556	1-218-881-11	METAL CHIP	27K	0.50%	1/16W	
R561	1-216-813-11	METAL CHIP	220	5%	1/16W	
R562	1-216-835-11	METAL CHIP	15K	5%	1/16W	
R563	1-216-829-11	METAL CHIP	4.7K	5%	1/16W	
R564	1-216-835-11	METAL CHIP	15K	5%	1/16W	
R566	1-216-837-11	METAL CHIP	22K	5%	1/16W	
R567	1-216-833-11	METAL CHIP	10K	5%	1/16W	
R568	1-216-831-11	METAL CHIP	6.8K	5%	1/16W	
R570	1-216-841-11	METAL CHIP	47K	5%	1/16W	
R601	1-216-833-11	METAL CHIP	10K	5%	1/16W	
R602	1-216-833-11	METAL CHIP	10K	5%	1/16W	
R603	1-216-833-11	METAL CHIP	10K	5%	1/16W	
R801	1-216-821-11	METAL CHIP	1K	5%	1/16W	
R802	1-216-821-11	METAL CHIP	1K	5%	1/16W	
R803	1-218-345-11	METAL GLAZE	9.1K	5%	1/16W	
R804	1-216-833-11	METAL CHIP	10K	5%	1/16W	
R806	1-216-821-11	METAL CHIP	1K	5%	1/16W	
R807	1-216-821-11	METAL CHIP	1K	5%	1/16W	
R808	1-216-821-11	METAL CHIP	1K	5%	1/16W	
R809	1-216-833-11	METAL CHIP	10K	5%	1/16W	
R810	1-216-829-11	METAL CHIP	4.7K	5%	1/16W	
R811	1-216-827-11	METAL CHIP	3.3K	5%	1/16W	
R812	1-216-825-11	METAL CHIP	2.2K	5%	1/16W	
R813	1-218-716-11	METAL CHIP	10K	0.50%	1/16W	
R814	1-216-813-11	METAL CHIP	220	5%	1/16W	
R815	1-216-813-11	METAL CHIP	220	5%	1/16W	
R816	1-216-813-11	METAL CHIP	220	5%	1/16W	

MAIN

Ref. No.	Part No.	Description			Remark
R817	1-216-861-11	METAL CHIP	2.2M	5%	1/16W
R818	1-216-854-11	METAL CHIP	560K	5%	1/16W
R819	1-216-857-11	METAL CHIP	1M	5%	1/16W
R820	1-216-857-11	METAL CHIP	1M	5%	1/16W
R821	1-216-821-11	METAL CHIP	1K	5%	1/16W
R822	1-216-831-11	METAL CHIP	6.8K	5%	1/16W
R823	1-216-837-11	METAL CHIP	22K	5%	1/16W
R824	1-216-857-11	METAL CHIP	1M	5%	1/16W
R825	1-216-857-11	METAL CHIP	1M	5%	1/16W
R826	1-216-857-11	METAL CHIP	1M	5%	1/16W
		< VARIABLE RESISTOR >			
RV301	1-230-485-11	RES, VAR, CARBON 10K/10K (VOLUME)			
RV502	1-223-586-11	RES, ADJ, CARBON 10K			
RV503	1-223-587-11	RES, ADJ, CARBON 22K			
RV504	1-223-587-11	RES, ADJ, CARBON 22K			
		< SWITCH >			
S301	1-572-922-11	SWITCH, SLIDE (AVLS)			
S801	1-692-088-11	SWITCH, TACTILE (⏮/▶)			
S802	1-692-088-11	SWITCH, TACTILE (⏭/▶)			
S803	1-692-088-11	SWITCH, TACTILE (■)			
S804	1-692-088-11	SWITCH, TACTILE (CHARGE)			
S805	1-572-922-11	SWITCH, SLIDE (RESUME)			
S806	1-572-922-11	SWITCH, SLIDE (HOLD)			
S807	1-572-922-11	SWITCH, SLIDE (ESP)			
S809	1-692-366-11	SWITCH, PUSH (1 KEY) (OPEN)			
		< TRANSFORMER >			
T401	1-427-677-11	TRANSFORMER, DC-DC CONVERTER			
		< VIBRATOR >			
X301	1-760-254-21	VIBRATOR, CERAMIC (16.9344MHz)			
X801	1-579-063-21	VIBRATOR, CERAMIC (4.19MHz)			

****

9-960-160-83

Sony Corporation
Personal A&V Products Company

English
96J0579-1
Printed in Japan
© 1996. 10
Published by Quality Engineering Dept.
(Shibaura)