2754

JVC

SERVICE MANUAL

XL-P70 A/B/C/E/G/J/U

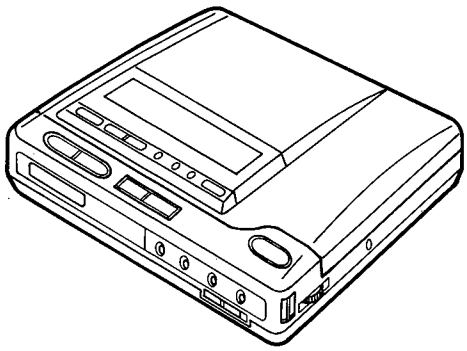

COMPACT disc DIGITAL AUDIO

COMPU LINK

Area Suffix	
A	Australia
B	U.K.
C	Canada
E	Continental Europe
G	Germany
J	U.S.A.
U	Other areas

Contents

	Page
1 Safety Precautions	2
2 Specifications	4
3 Instructions (Extract)	4
4 Location of Main Parts	10
5 Removal of Main Parts	11
6 Main Adjustments	13
7 Block Diagram	14
8 Wiring Connections	15
9 Standard Schematic Diagram and Location of P.C. Board Parts	16
Sub P.C. Board Section	17
Main P.C. Board Section	18
10 Electrical Parts List	21
Sub P.C. Board Parts List	21
Home Audio Station Unit Board and Standard Schematic Diagram	22
Main P.C. Board Parts List	23
11 Exploded View of CD Mechanism Component Parts and Parts List	29
Mechanism Component Assembly Parts List	29
12 Exploded View of Enclosure Component Parts and Parts List	30
Enclosure Assembly Parts List	31
13 Packing Illustration and Packing Parts List	32

No. 1816
April 1991

1 Safety Precautions

Important for Laser Products (For U.S.A. only)

1. CLASS 1 LASER PRODUCT
2. DANGER: Invisible laser radiation when open and interlock failed or defeated. Avoid direct exposure to beam.
3. CAUTION: Do not open the bottom cover. There are no user serviceable parts inside the unit; leave all servicing to qualified service personnel.
4. CAUTION: The compact disc player uses invisible laser radiation and is equipped with safety switches which prevent emission of radiation when the disc holder is open and the safety interlocks have failed or are defeated. It is dangerous to defeat the safety switches.
5. CAUTION: Use of controls of adjustments or performance of procedures other than those specified herein may result in hazardous radiation exposure.
6. CAUTION: The laser is able to function, if safety switches are out of function. The laser light is invisible, avoid exposure, do not disassemble the laser unit, but replace the complete unit.

IDENTIFICATION LABEL AND CERTIFICATION LABEL (XL-P70J)

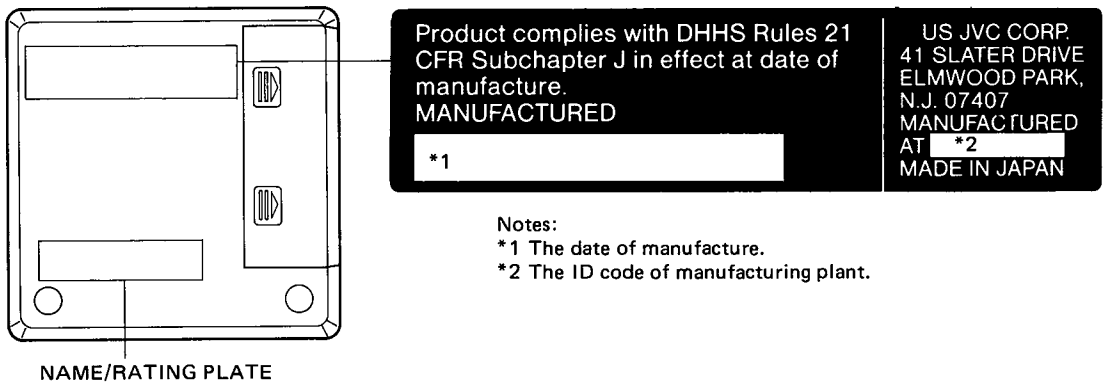

Notes:
*1 The date of manufacture.
*2 The ID code of manufacturing plant.

IDENTIFICATION LABEL AND CERTIFICATION LABEL (XL-P70B/E/G)

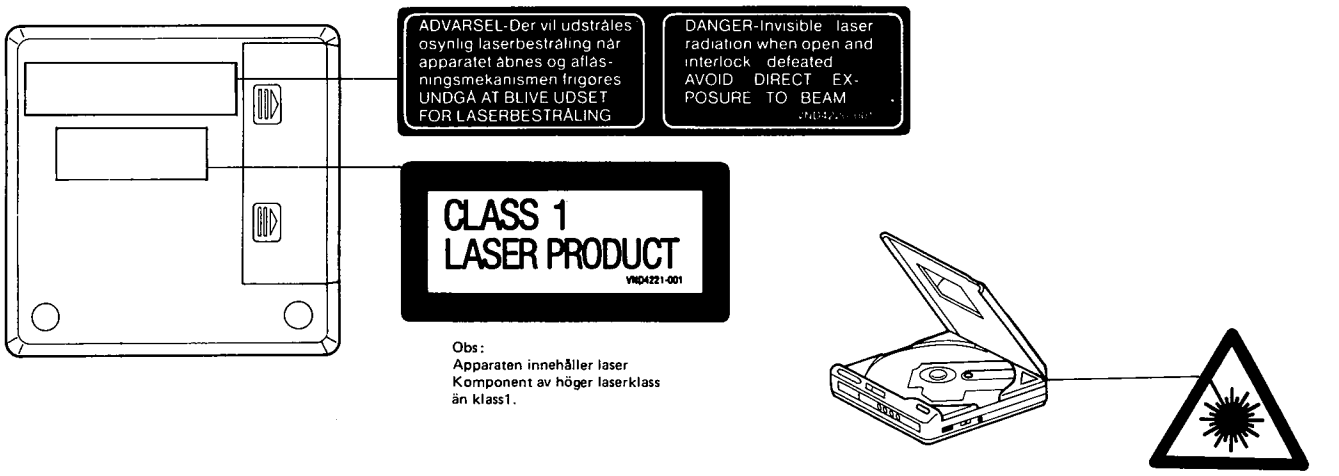

SAFETY PRECAUTIONS

CAUTION:
CHARGE ONLY WITH PROVIDED Ni-Cd RECHARGEABLE BATTERIES, TYPE BN-R121. OTHER TYPES OF BATTERIES MAY BURST CAUSING PERSONAL INJURY AND DAMAGE.

1. **AC adapter**
   Be sure to unplug the AC adapter from the wall AC outlet when not in use.
2. **When water gets inside the unit**
   Unplug the AC adapter from the wall AC outlet and consult the dealer.
3. **Do not touch the interior parts.**

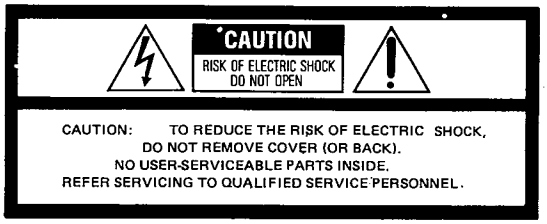

The lightning flash with arrowhead symbol, within an equilateral triangle, is intended to alert the user to the presence of uninsulated "dangerous voltage" within the product's enclosure that may be of sufficient magnitude to constitute a risk of electric shock to persons.

The exclamation point within an equilateral triangle is intended to alert the user to the presence of important operating and maintenance (servicing) instructions in the literature accompanying the appliance.

2 Specifications

Portable CD player XL-P70
Type: Compact disc player
Signal detection system: Non-contact optical pickup (semiconductor laser)
Pickup system: 3 beam laser
Number of channels: 2 channels (stereo)
Frequency response: 17 Hz ~ 20,000 Hz ±1 dB
Wow & flutter: Unmeasurable
Output: Line out (3.5 mm dia. stereo x 1)
650 mV/47 k ohms
Headphone (3.5 mm dia. stereo x 1)
15 mW at 5% THD/20 ohms,
matching impedance (16 ohms – 40 ohms)
S.E.A. characteristics : S.E.A. center frequencies: 60 Hz/250 Hz/1 kHz/4 kHz/10 kHz
S.E.A. control range ±6 dB
Duration of battery: When using a fully charged rechargeable battery (BN-R121); Approx. 2 hours
When using an alkaline battery; Approx. 6 hours
Power requirements: DC 6 V (Ordinary battery x 4, size AA)
DC 4.8 V (Rechargeable battery (BN-R121) x 4)
DC 5.5 V (AC adapter (AA-R905J))

Dimensions (W x H x D): 132 x 39.5 x 147 mm (5-1/4" x 1-5/8" x 5-13/16")
(Excluding buttons and controls)
Weight: Approx. 390 g (0.86 lbs) (without batteries)
Approx. 480 g (1.1 lbs) (with rechargeable batteries)
Accessories provided: AC adapter (AA-R905J) x 1
Rechargeable battery (BN-R121) x 4
Home audio station uniut (AC-RS2) x 1
Headphone x 1
Remote control unit (RM-RL70)
Battery "AAA" x 2 (for the remote control)
Remote cable x 1
Signal cord x 1
Carrying belt x 1
Carrying case x 1

AC adapter (AA-R905J)
Input power source: AC 120 V, 60 Hz
Output voltage: DC 5.5 V, 500 mA
Rechargeable battery BN-R121
Type: Ni-Cd rechargeable battery
Recharge time: Approx. 9 hours (Approx. 90 % of full charge)
Battery life: Repeat recharging approx. 500 times
Output voltage: DC 1.2 V

Optional accessories
Car insulator (CA-R1)
Car adapter (CA-R60)

Design and specifications are subject to change without notice.

3 Instructions(Extract)

NAMES OF PARTS AND THEIR FUNCTIONS

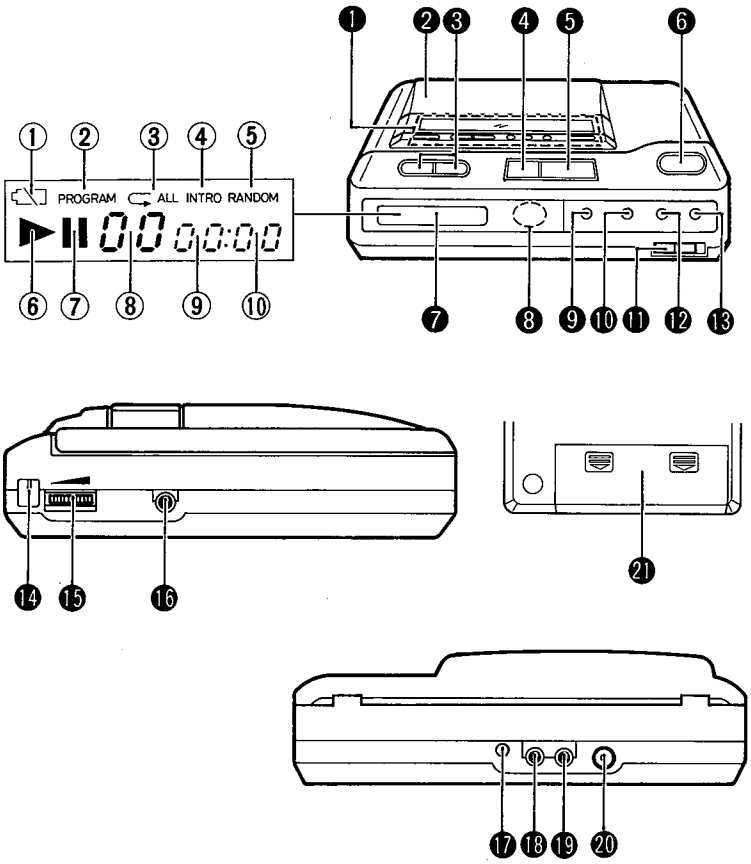

❶ S.E.A. graphic equalizer operation section (See page 18.)
❷ Disc holder
❸ SEARCH (⏮/⏭) buttons
❹ STOP/CLEAR (■) button
❺ PLAY/PAUSE (▷II) button
❻ Disc holder open (OPEN) button
❼ Display window
① Battery indicator ( )
② PROGRAM mode indicator
③ Repeat playback indicator (ALL)
④ INTRO scan indicator
⑤ RANDOM playback indicator
⑥ Playback indicator (▶)
⑦ Pause indicator (II)
⑧ Track (tune) number display
⑨ Time (minute)/Program order number display
⑩ Time (second) display
❽ REMOTE SENSOR section
❾ MEMORY button
❿ REPEAT button
⓫ HOLD switch
⓬ RANDOM button
⓭ INTRO button
⓮ Carrying belt attaching piece
⓯ VOLUME control
⓰ PHONES jack
⓱ Installation hole for car insulator (option)
⓲ COMPU LINK-1 jack
⓳ LINE OUT jack
⓴ DC IN 6V jack ( )
㉑ Battery compartment cover

NAMES OF PARTS AND THEIR FUNCTIONS

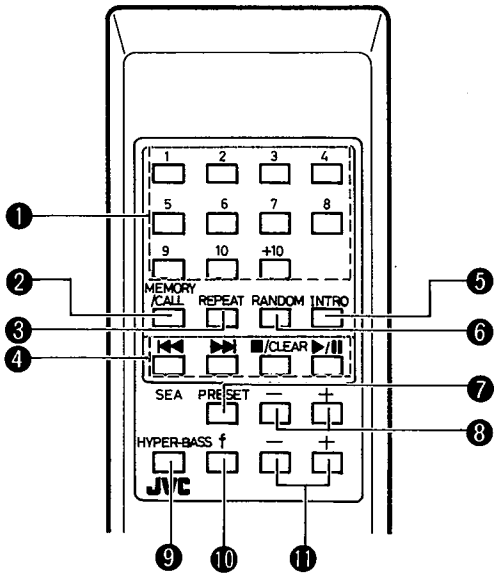

❶ Track (tune) number buttons (No. 1—No. 10, +10)
❷ MEMORY/CALL button
❸ REPEAT button
❹ CD operation buttons
- Search buttons (⏮, ⏭)
- Stop/clear button (■ /CLEAR)
- Play/pause button (▶ / II)

❺ INTRO scan button
❻ RANDOM button
❼ S.E.A. preset button (PRESET)
❽ Equalizer scale control buttons (−, +)
❾ HYPER-BASS button
❿ S.E.A. frequency select button (f)
⓫ S.E.A. level control buttons (−, +)

Note:
It is impossible to switch the power of the CD player on and off using the remote control unit.

PLAYING COMPACT DISCS

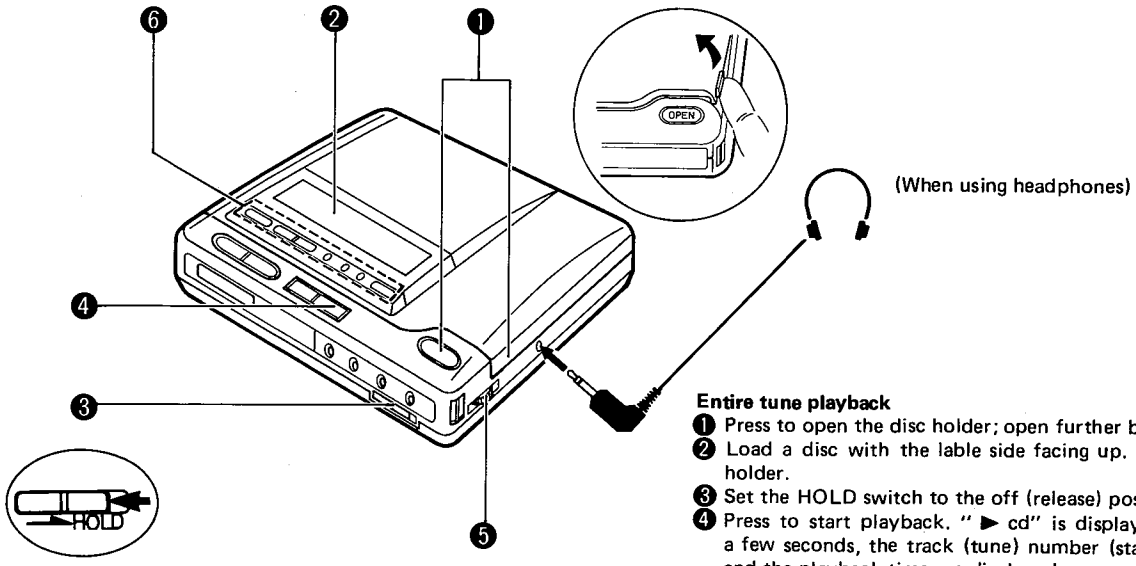

Entire tune playback

1. Press to open the disc holder; open further by hand.
2. Load a disc with the lable side facing up. Close the disc holder.
3. Set the HOLD switch to the off (release) position.
4. Press to start playback. " ▶ cd" is displayed and, after a few seconds, the track (tune) number (starting from 1) and the playback time are displayed.
5. Adjust the volume.
6. Set the S.E.A. control and HYPER-BASS buttons as required (See page 18.)

- **HOLD switch**
  If the HOLD switch is set to on, it is locked to the current mode and will not change to another mode, even if another button is pressed, however, its volume, S.E.A. controls and HYPER-BASS button can be used.
  (When the remote control is used, the CD player can be operated even when the HOLD switch is set to on.)

- **Disc holder**
  When the disc holder is opened, power will automatically switched off.

Skip playback

To listen to the next tune ...
Press the ▶▶| button once to skip to the beginning of the next tune.

To listen to the previous tune...
Press the |◀◀ button to skip to the beginning of the tune being played back and press again to skip to the previous tune.

Search playback

- The required position can be located using fast-forward or reverse search during playback.

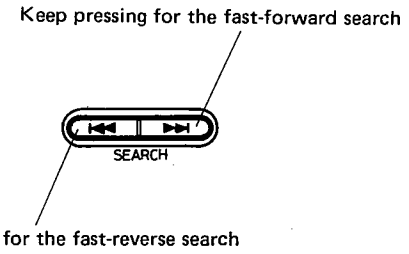

To stop playback

- **To stop in the middle of a disc**
  During playback, press the ■ STOP/CLEAR button to stop playback.
  The total number of tunes and total playing time are displayed.
  When pressed again, power will be switched off.

- **To stop a disc temporarily**
  Press the ▷II PLAY/PAUSE button. When pressed again, playback resumes.

- **Auto power off function**
  When it is left in the stop mode for more than 2 minutes, power is switched off automatically.

Notes:

- The following indication may be shown when a disc is dirty or scratched, or when the disc is loaded upside down.
  In such a case, check the disc and insert again, and clean or change the disc.

Direct access playback

(can only be performed using the remote control unit)

- When there are no more programmed tunes, pressing any of the track number buttons will start play from the beginning of the designated tune directly.

❶ Press the ▷ ❚❚ button of the CD player to set to the CD play mode.

❷ Designate the required tune using the track number buttons.

- To designate tune numbers 1 to 10, press the track number button corresponding to the tune (track) number.
- To designate tune number 11 or more, press the +10 button the required number of times, then a track number button. (Example: To designate the 30th tune, press the +10 button twice then press track number button 10.)

* +10 button:
Each time this button is pressed, the number increases in increments of 10. First press this button to set the 10's digit, then press the track number button to set the 1's digit.

- **To play another tune during play**
When the required track number button is pressed, the display shows the designated track number and play starts from the beginning of the designated tune.

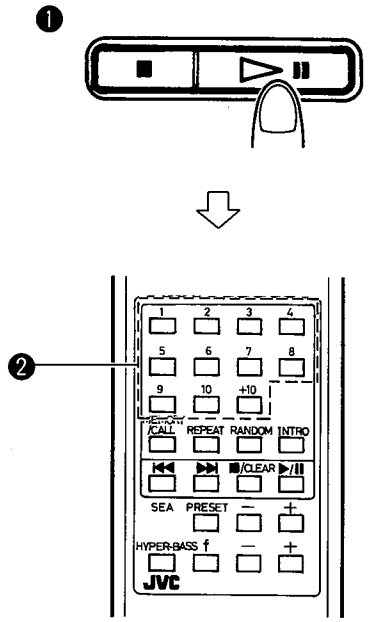

Programmed playback

(when operating on the remote control unit)

- Programmed playback can be performed up to 22 tunes (max) in any required order.

①

② While the total number of tunes and total playing time are displayed, press the MEMORY/CALL button to set to the programming mode.

③ Designate the required tune using the track number button.

④ Designate other tunes by pressing the track number buttons.

④ Press the ▶/❚❚ button when programming is completed. Programmed playback starts.

- When programming using the controls of the CD player, not the remote control, search for the required tunes using the SEARCH button and each time a required tune is located, press the MEMORY button.

Note:
When the total playing time of programmed tunes is 100 minutes or more, only the last two digits will be displayed. (Example: When the total playing time is 113 minutes, 13 is displayed.)

②

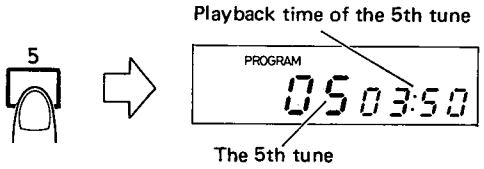

③

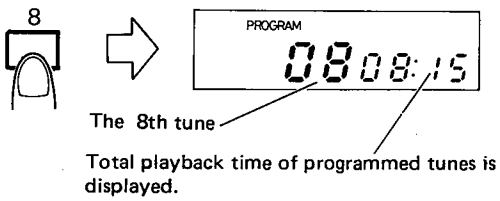

④

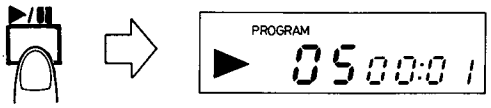

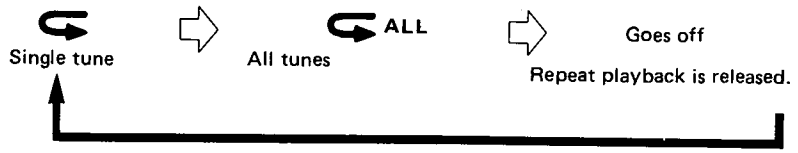

To confirm the details of programmed tunes....
When the MEMORY/CALL button is pressed, the details of programmed tunes are displayed in the programmed order.

To clear programmed tunes....
Press the ■ /CLEAR button before playback. During programmed playback, press this button twice. When the disc holder is opened, the programmed tunes are automatically cleared.

INTRO-scan operation

When the INTRO button is pressed during playback, the first 15 seconds of each tune are played back sequentially.

Repeat playback

Press the REPEAT button during playback. A single tune or all the tunes can be repeated.

- **Repeat playback of a single tune (⟲)**
  The tune being played back can be heard repeatedly.

- **Repeat playback of all the tunes (⟲ ALL)**
  When playing back the entire disc or programmed tunes, all the tunes or the programmed tunes can be heard repeatedly.

Random playback

When the RANDOM button is pressed during playback, this unit enters the random all repeat mode and the tunes on the disc are played back repeatedly in random order.

- **Do not use the unit at excessive high or cold temperatures. The recommended temperature range is 5°C (41°F) to 35°C (95°F).**

S.E.A. GRAPHIC EQUALIZER

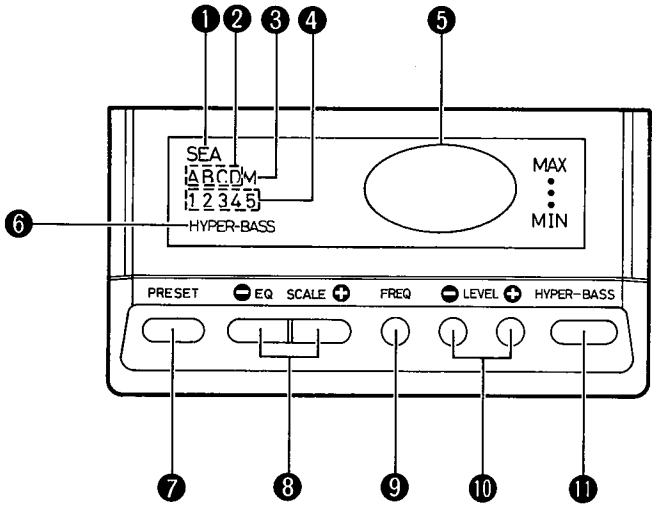

Name of parts in the S.E.A. graphic equalizer section and their functions

❶ SEA mode indicator
❷ SEA programmed preset pattern indicator (A to D)
❸ SEA manual pattern indicator (M)
❹ Equalizer scale indicator (1 to 5)
❺ SEA/SPECTRUM ANALYZER level indicator
❻ HYPER-BASS indicator
❼ SEA preset button (PRESET)
❽ Equalizer scale button (EQ SCALE/ ⊖, ⊕)
❾ SEA frequency button (FREQ)
❿ SEA level buttons (LEVEL/ ⊖, ⊕)
⓫ HYPER-BASS button

S.E.A. operation

- With this operation, the SEA level for each of the five bands are adjusted as required.

① Press the PRESET button to set the display to the SEA mode.
(The " SEA " indicator lights.)
② Select the required frequency band with the FREQ button.
- The level indicator of the selected frequency band blinks.

③ Adjust to the required level with the LEVEL (⊖, ⊕) buttons.
④ Repeat operations ② and ③ for other bands.
- After finishing the above operations, the display switches back to the SPECTRUM ANALYZER mode.
- If the display switches back to the SPECTRUM ANALYZER mode during this operation, perform the above operation again.
- When the HYPER-BASS button is set to the ON position, the 60Hz band is set to maximum relative output and cannot be adjusted.

* It is convenient to perform the above S.E.A. operation after "Recalling a preset pattern".

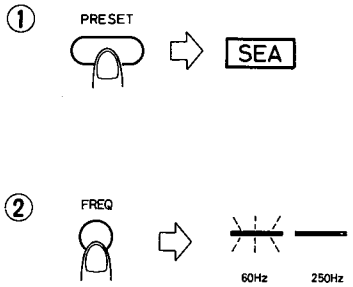

Presetting a manual pattern

- One user-programmable pattern can be stored.

① Perform the above S.E.A operations to make your own SEA pattern.
② Press the PRESET button for more than 2 seconds. The required manual pattern is then stored in memory and the " M " indicator lights.
- The manual pattern previously stored in memory is cancelled automatically.

Recalling a preset pattern

- Four basic preset SEA patterns and five variation of each pattern are provided in this CD player.

① Press the PRESET button to set the display to the SEA mode. The "SEA" indicator lights.
② Select the required SEA pattern (A to D, M) by pressing the PRESET button again.
- Each time the PRESET button is pressed, the indicator changes.

A:	For music with a heavy beat, such as disco music
B:	For singing
C:	For crisp, clear sound with transparent highs
D:	For background music, at low volumes
M:	For a manual (user-programmable) pattern
Goes out:	In this position, the SEA circuit is bypassed and the frequency response becomes flat, so the user can check the SEA effect.

- After selecting an SEA pattern (A to D), by pressing the EQ SCALE buttons (⊖, ⊕), five variation (1 to 5) of the selected SEA pattern can be selected.
"3" is displayed when the power is connected for the first time.

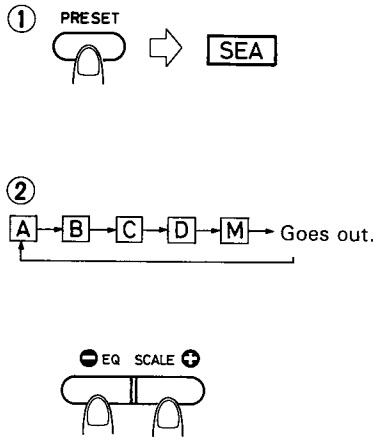

Notes:

- When the power supply to the CD player is interrupted, the SEA manual preset pattern becomes flat and the equalizer scale of the programmed preset pattern (A to D) goes back to "3"
- Both signals from the headphone jack and the LINE OUT jacks are enhanced with the SEA effect and HYPER-BASS sound effect; adjust the SEA and HYPER-BASS controls so that the signal is not distorted when using the LINE OUT signal.

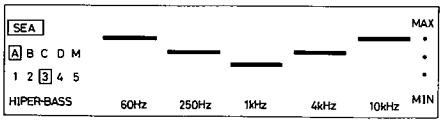

SEA/SPECTRUM ANALYZER level indicators.

- SEA level indicator: the SEA level of each frequency bands is displayed.
- SPECTRUM ANALYZER level indicator: The frequency of the output sound is divided into five frequency bands.
- When the SEA level is stored or recalled, the display shows the SEA level. A few seconds later, the display goes back to the SPECTRUM ANALYZER mode.

SEA

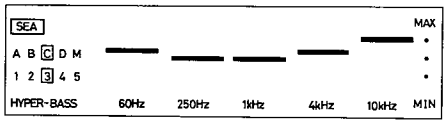

SPECTRUM ANALYZER

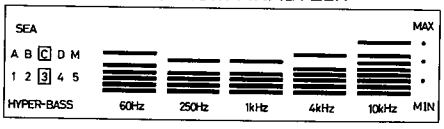

POWER SUPPLY

A. Operation with rechargeable batteries

• Recharging

a) Recharging with a Home Audio Station unit.
① Insert the rechargeable batteries.
② Connect to the DC IN jack.
③ Connect to the AC outlet.

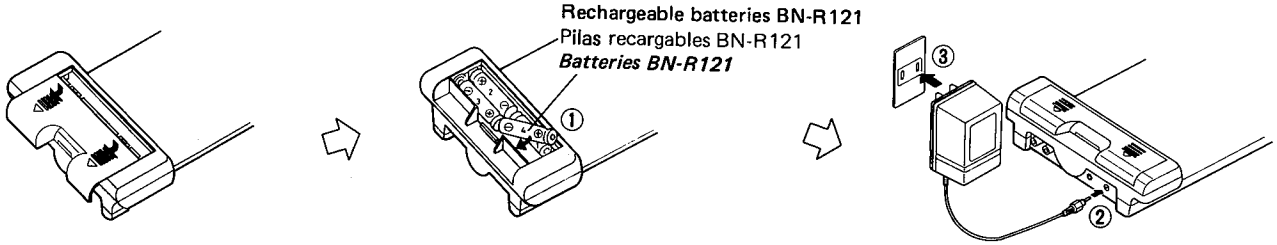

4 Location of Main Parts

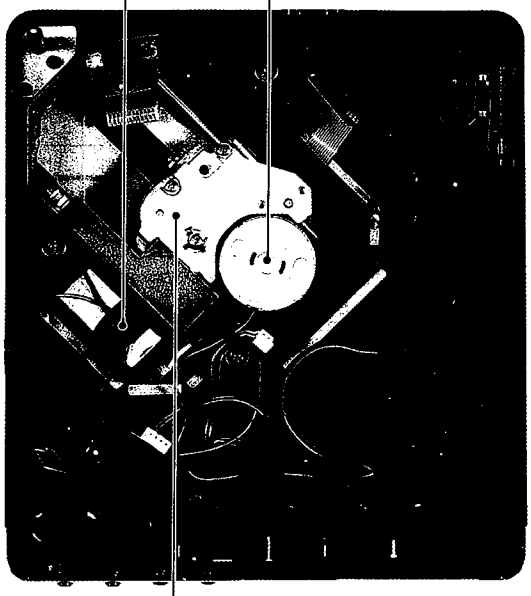

Fig. 4-1 Unit Case

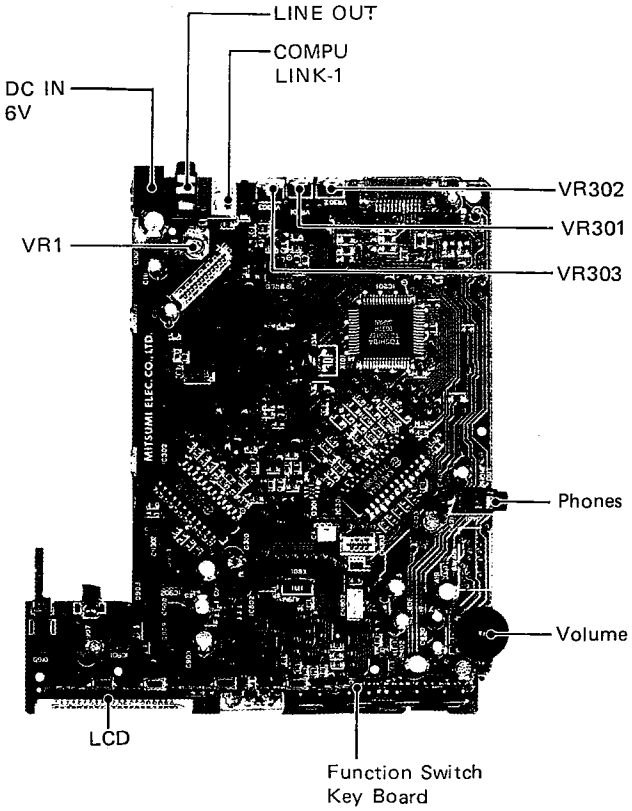

Fig. 4-2 Main P.C.Board

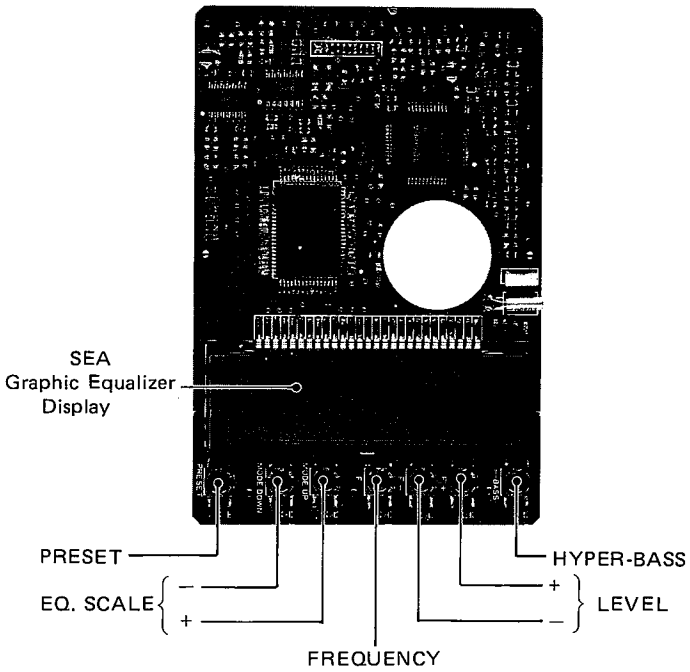

Fig. 4-3 Sub P.C.Board

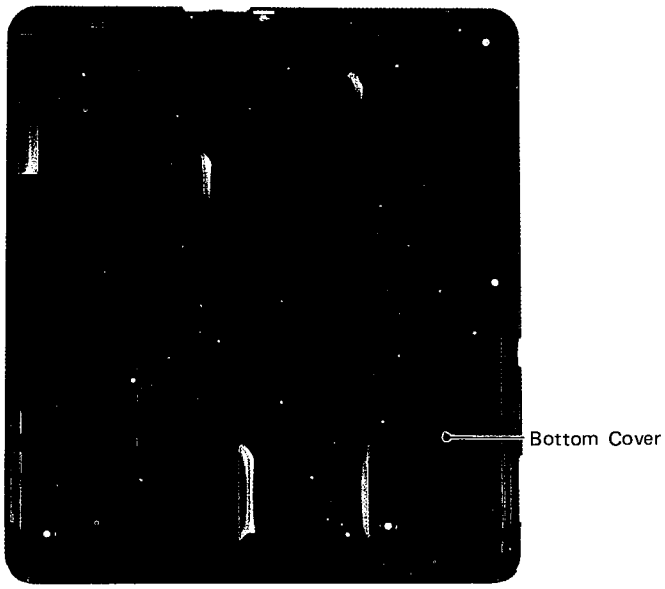

Fig. 4-4 Bottom Cover

5 Removal of Main Parts

■ **Bottom cover** (Fig. 5-1)

1. Take off the battery cover and the hold switch knob.
2. Remove four screws ① (6 mm x M1.7) retaining the CD case.
3. Remove two screws ② (4 mm x M1.7) retaining the CD case.
4. Take off the CD case.

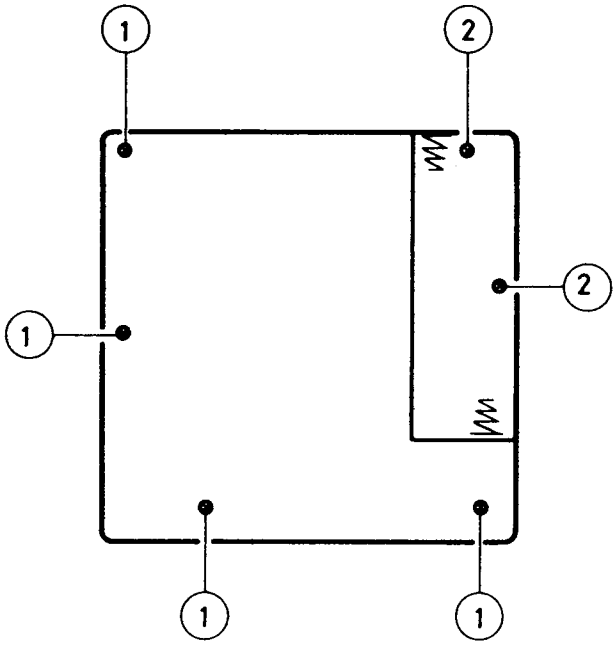

Fig. 5-1

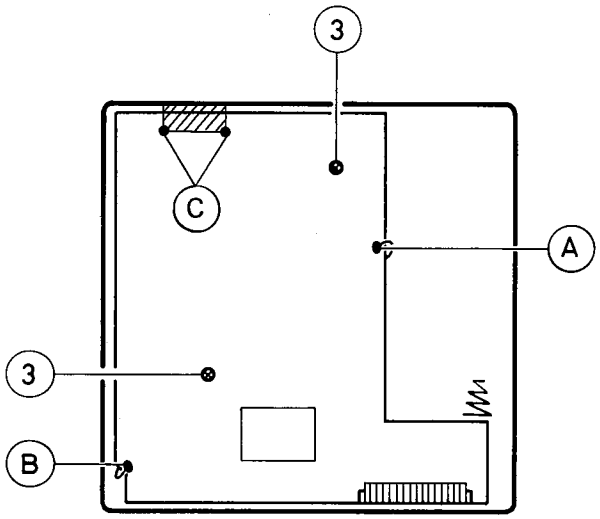

Fig. 5-2

■ **Print circuit board assembly** (Fig. 5-2)

1. Unsolder the pickup wire Ⓐ from the shield plate.
2. Unsolder the capacitor wire Ⓑ from the shield plate.
3. Take out the shield plate.
4. Remove two screws ③ (4 mm x M1.7) retaining the print circuit board assembly.
5. Unsolder the shield wire for flexible Ⓒ from the main P.C.board.
6. Lift up the print circuit board assembly while remove six connectors (for pickup : 12-pin flat cable, 4-pin flat cable, 10-pin flat cable, 4-pin connector, 2-pin connector, 2-pin black connector).

■ **Mechanism assembly** (Fig. 5-3)

1. Remove three screws ④ retaining the mechanism assembly.
2. When reassembling the set, deal with the tape to leaf switch and motor wires.

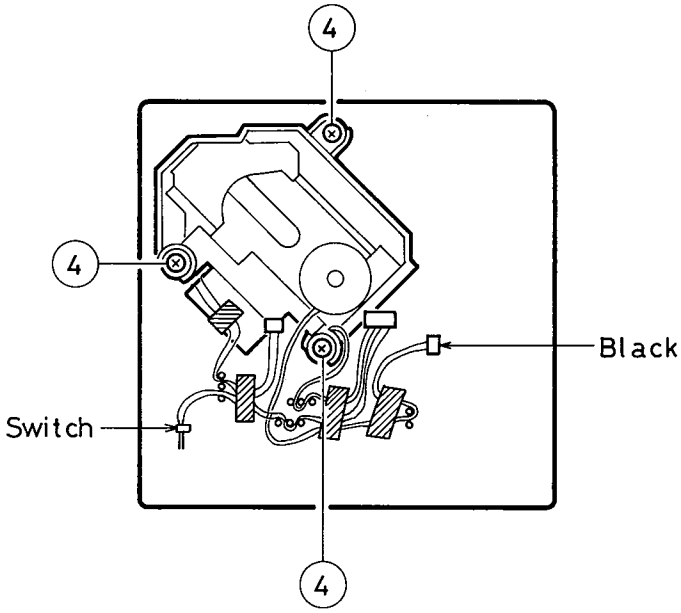

Fig. 5-3

■ **Mechanism cover** (Fig. 5-4)
Remove two screws (5) retaining the mechanism cover.

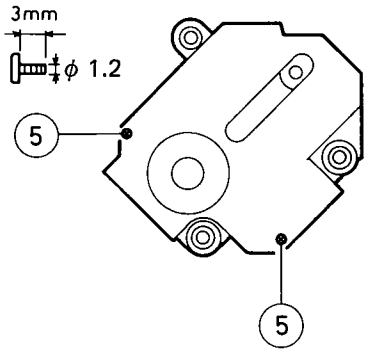

Fig. 5-4

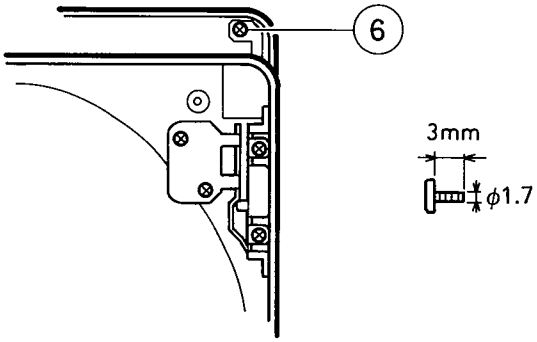

Fig. 5-5

■ **CD upper case**
1. Push the open button and open the CD upper case.
2. Push the shafts of the hinge outward.
3. Remove the screw (6) retaining the hinge.

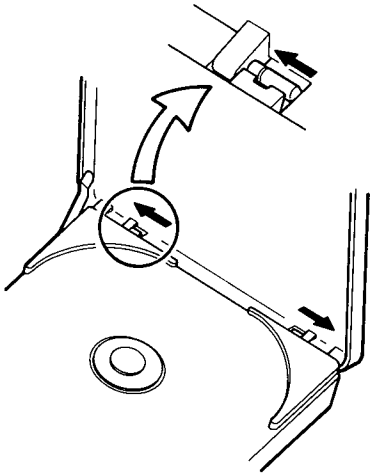

Fig. 5-6

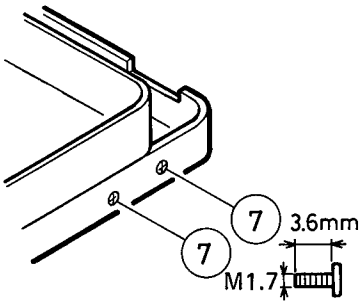

Fig. 5-7

4. Remove two screws (7) retaining the hinge from side CD upper cover.

■ **LCD board assembly** (Fig. 5-8)
Remove seven screws (8) retaining the cover with clamper from the CD upper case.

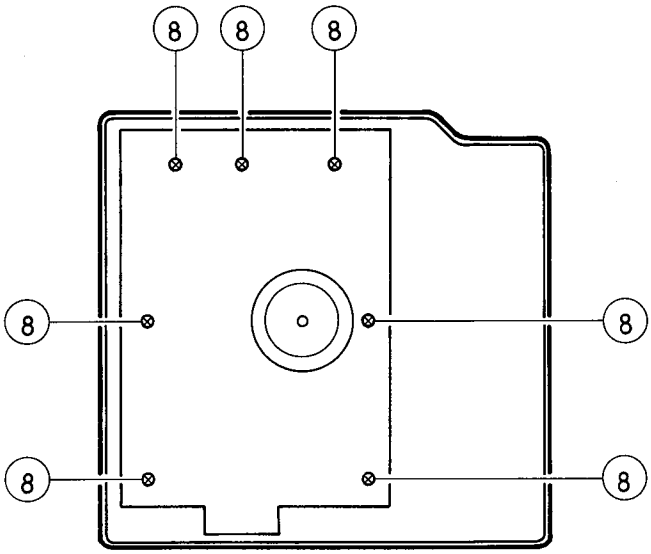

Fig. 5-8

6 Main Adjustments

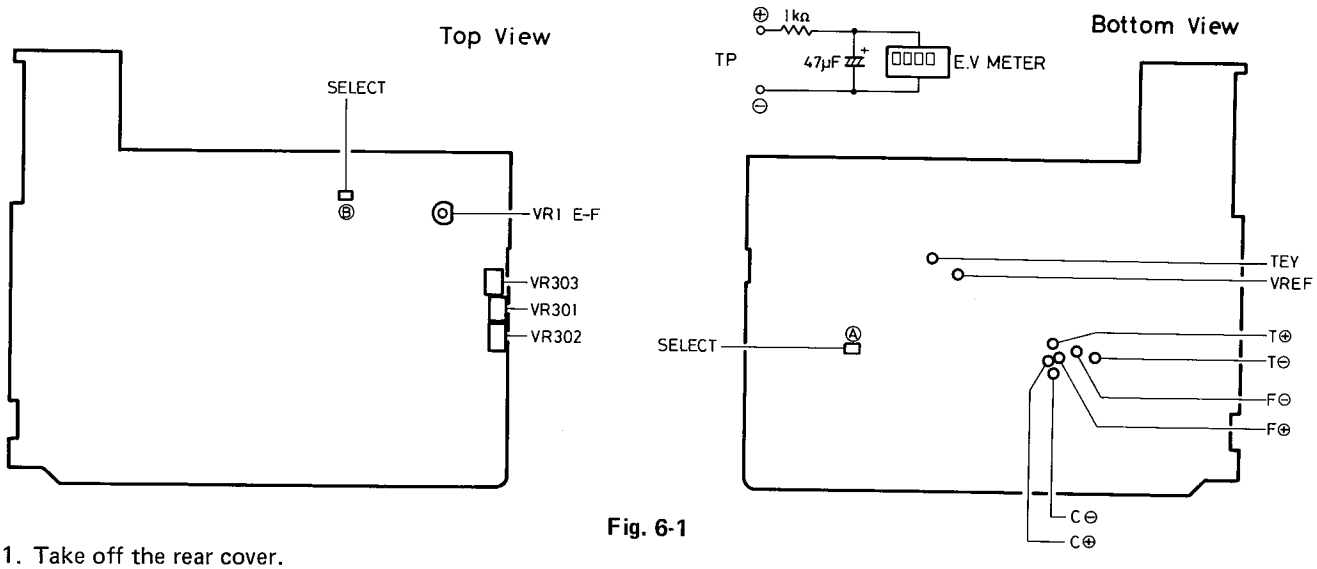

Fig. 6-1

1. Take off the rear cover.
2. With the CD cover being closed, supply power through the DC jack.
3. With the three operation buttons of 'MEMORY', 'RANDOM' and 'REPEAT' being pressed down, press the PLAY button.
   (At that time, confirm that " CD^{INTR}" (test mode) is displayed in the LCD.)

■ **Tracking offset** (with simple filter used)
Adjust VR301 to obtain 55 ± 5 mV as voltage between two test points of T + and T − on the back of the P.C. board. (T − : reference)

■ **Carriage offset** (with simple filter used)
Adjust VR302 so that voltage between two test points of C + and C − on the back of the P.C. board is 0 V. (C − : reference)

■ **Focus offset** (with simple filter used)

1) Make a shortcircuit between the SELECT Ⓐ and the SELECT Ⓑ which are located on the front and back sides of the P.C. board by soldering a jumper wire to them.
2) Adjust VR303 so that voltage between two test points of F + and F − on the back of the P.C. board becomes −200 mV. (F − : reference)
3) Unsolder the SELECT Ⓐ of the back of the P.C. board to release it from shortcircuit, and confirm that voltage between F + and F − is less than −900 mV.
   a) When the voltage is less than −900 mV, solder the SELECT Ⓐ again and the adjustment is completed.
   b) When the voltage is over −900 mV (−200 mV to −900 mV), unsolder the SELECT Ⓑ of the front side of the P.C. board to release it from shortcircuit, and confirm that voltage between F + and F − is less than −900 mV. If the voltage is satisfactory, solder the SELECT Ⓐ again and the adjustment is completed.

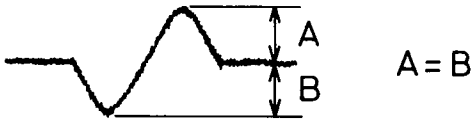

Fig. 6-2

■ **EF balance**
For adjustment of EF balance, connect an oscilloscope's probe directly to a test point with external synchronization for monitoring. (VREF: Reference)
Monitoring points for adjustment are internal sections (but after TNO1 "01:03") of a disk.
Play any CD by the track-1 for about 3 seconds and make a pause. In this state adjust VR1 (E-F) by observing waveform with an oscilloscope which is connected to the TEY and VREF of the back of the P.C. board so that peak levels of the waveform are equalized (A = B).

7 Block Diagram

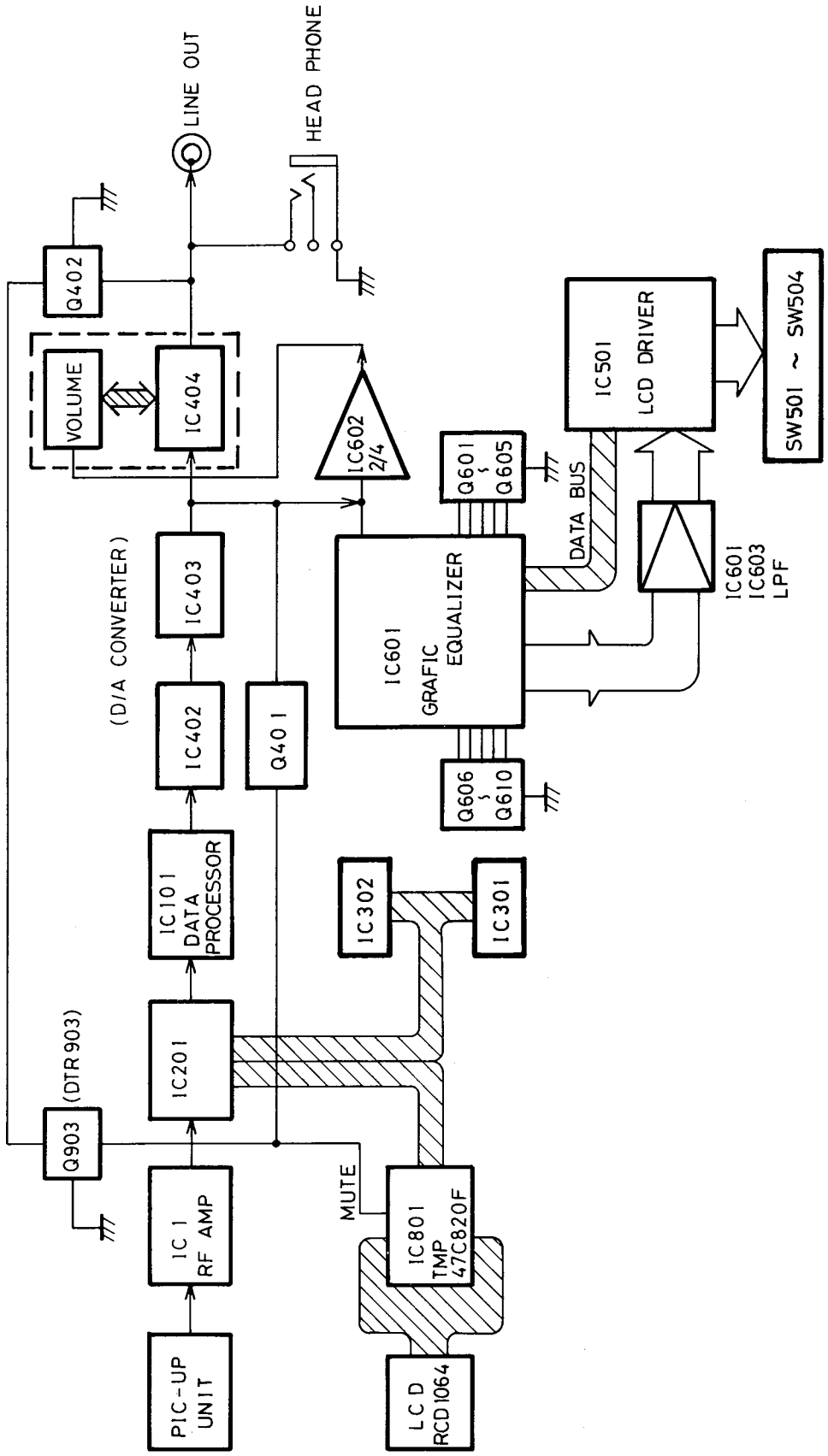

Fig 7-1

8 Wiring Connections

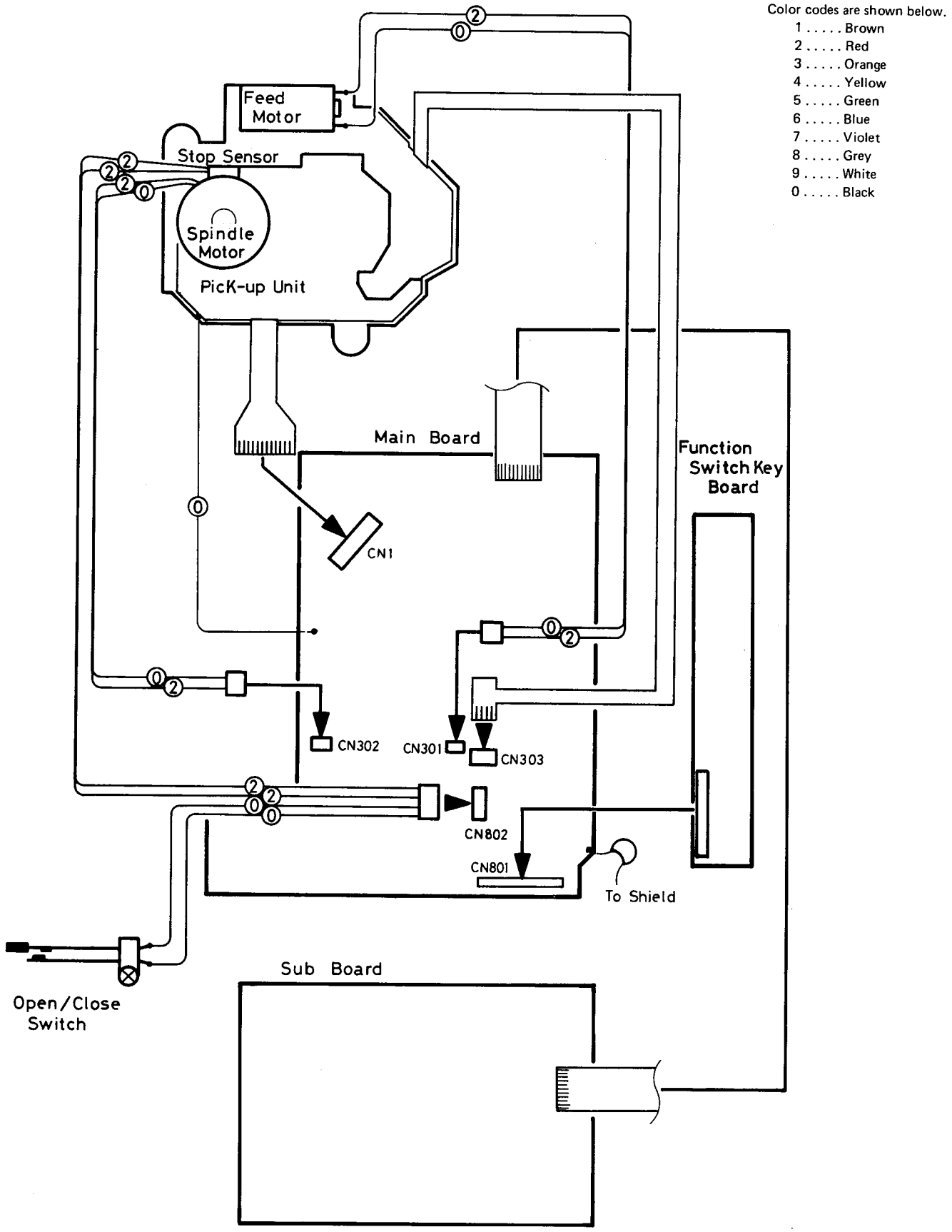

Fig 8-1

9 Standard Schematic Diagram and Location of P.C. Board Parts

■ Sub P.C. Board Section

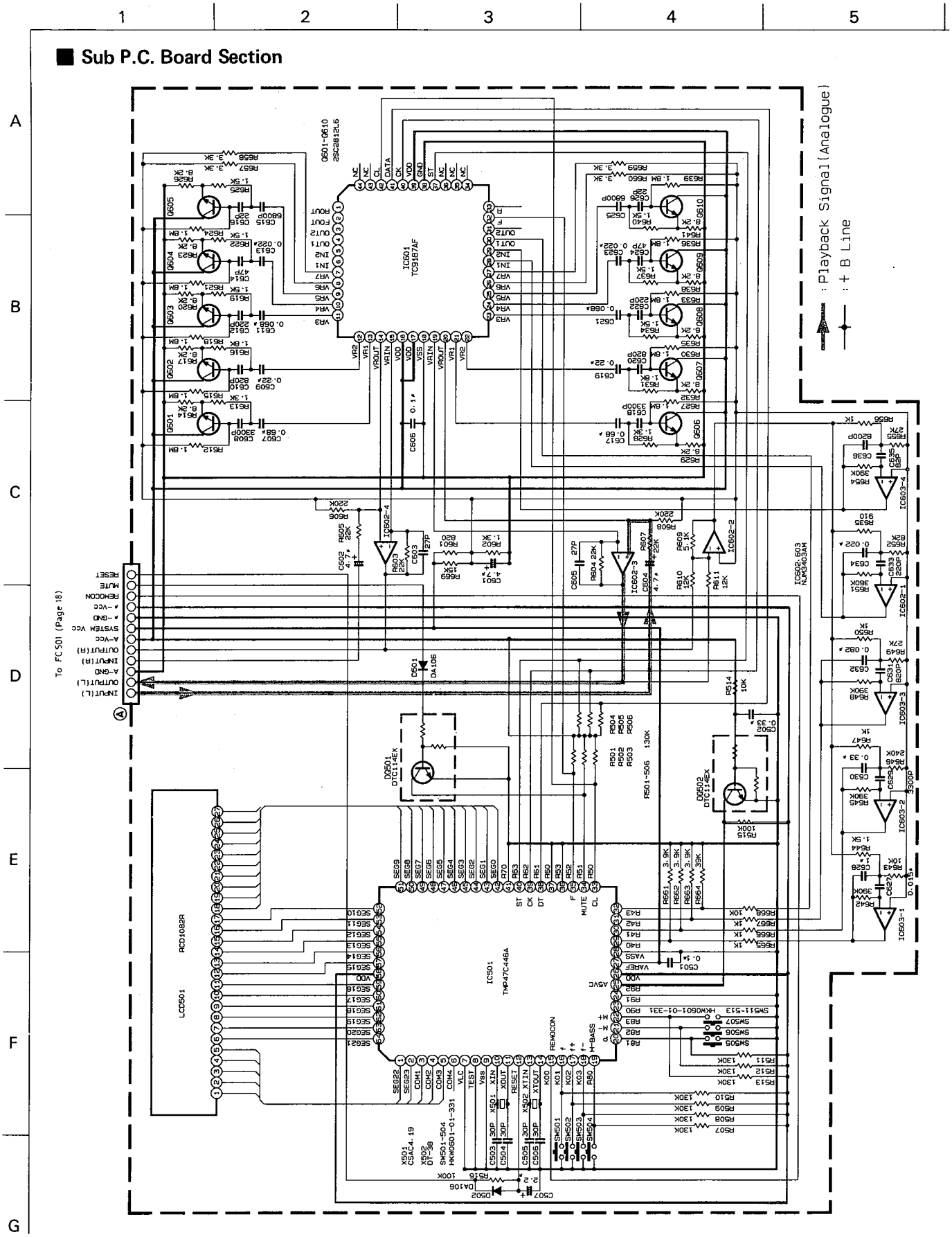

Fig 9-1

■ Sub P.C. Board (The Surface Side)

: Chip Parts

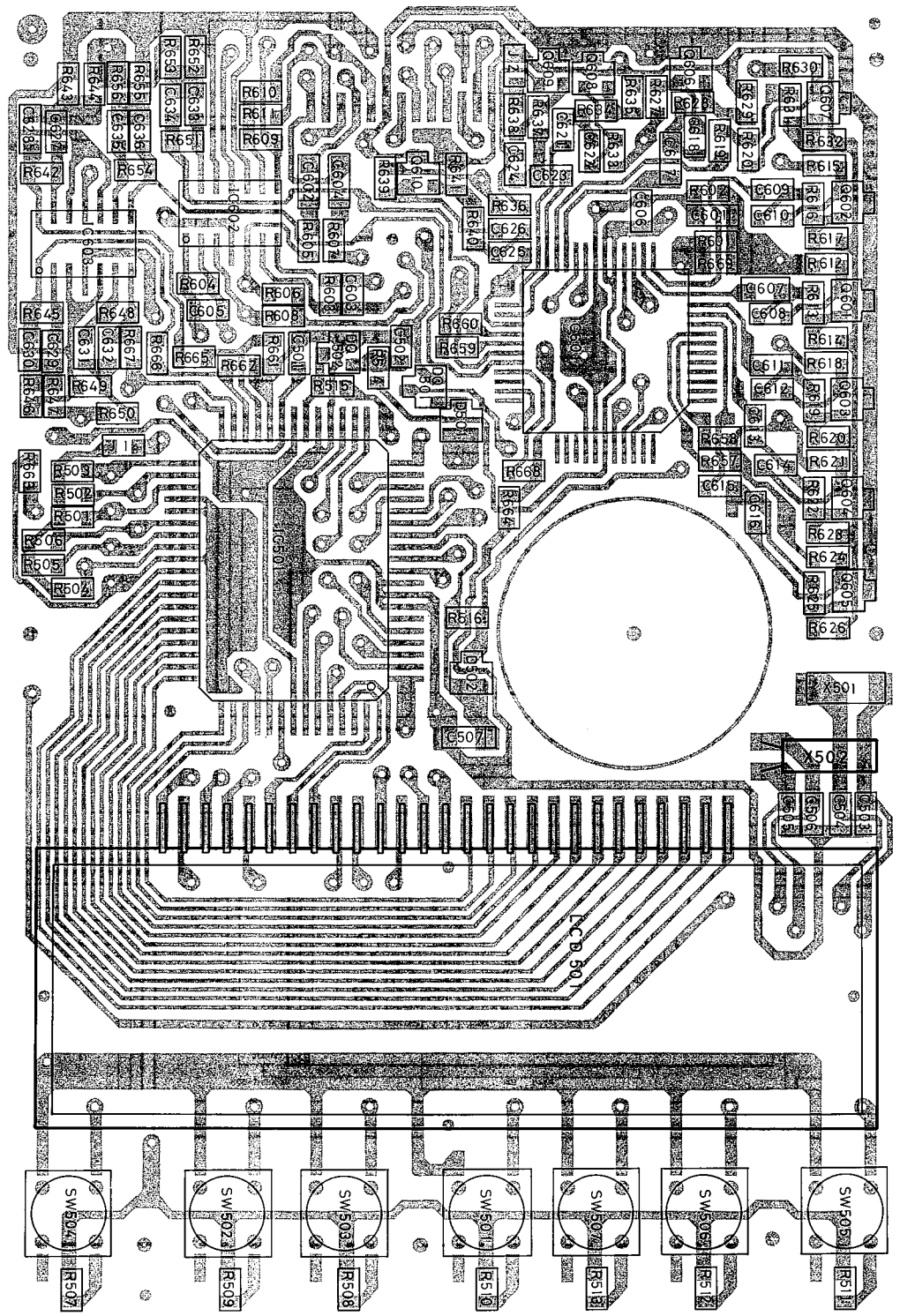

Fig 9-2

■ Sub P.C. Board (The Back Side)

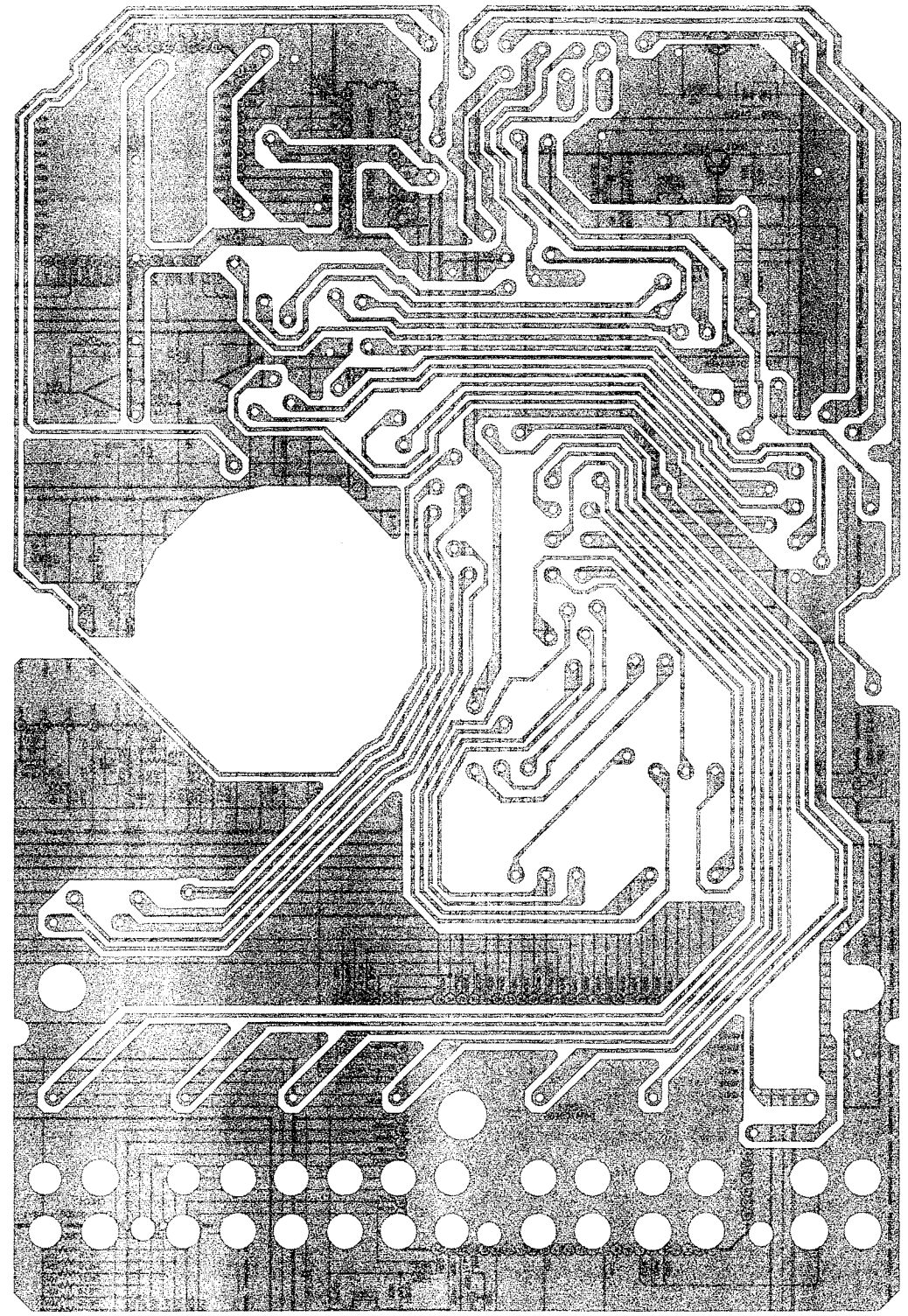

Fig 9-3

■ Main P.C. Board Section

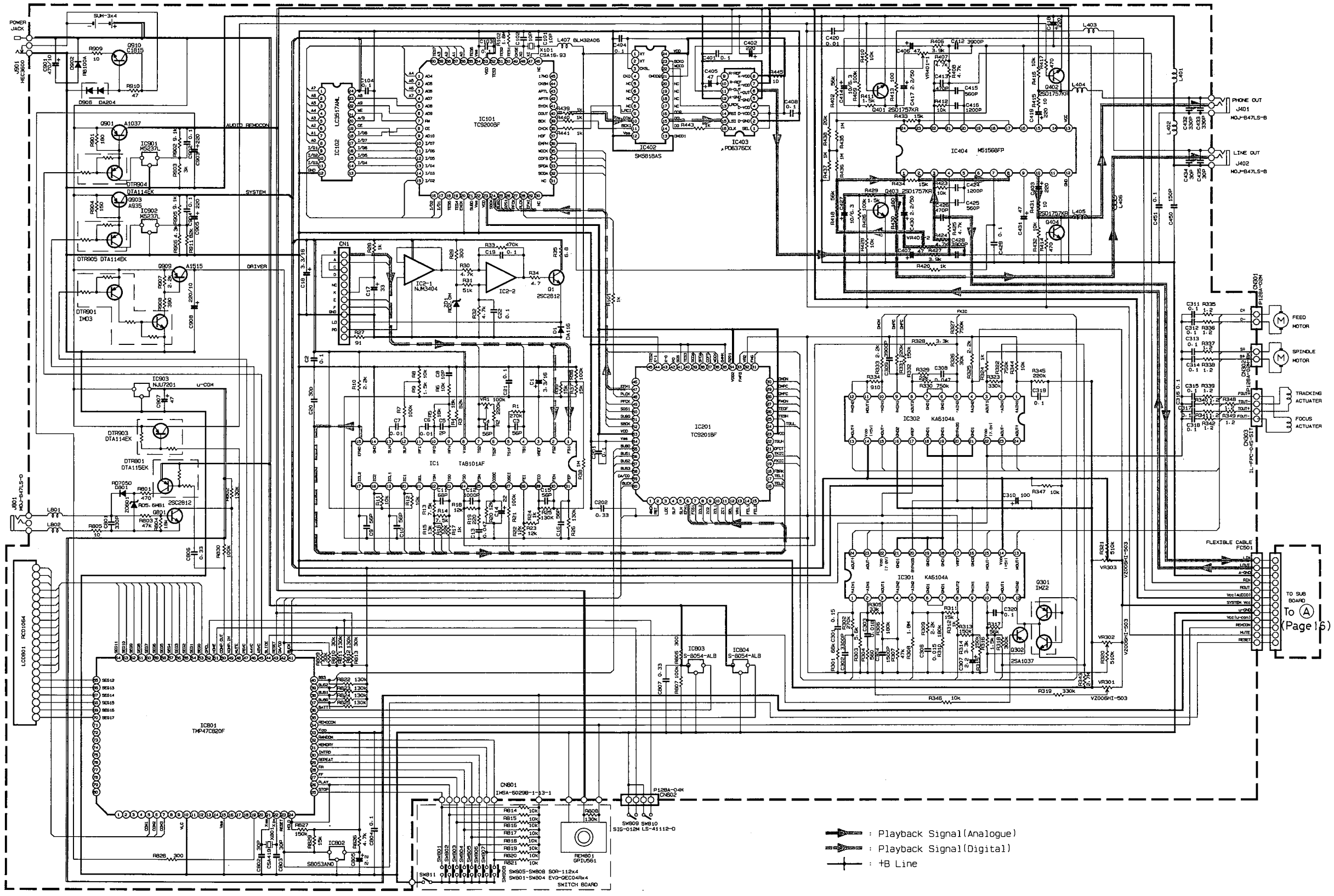

Fig 9-4

■ **Main P.C. Board : Back Side**

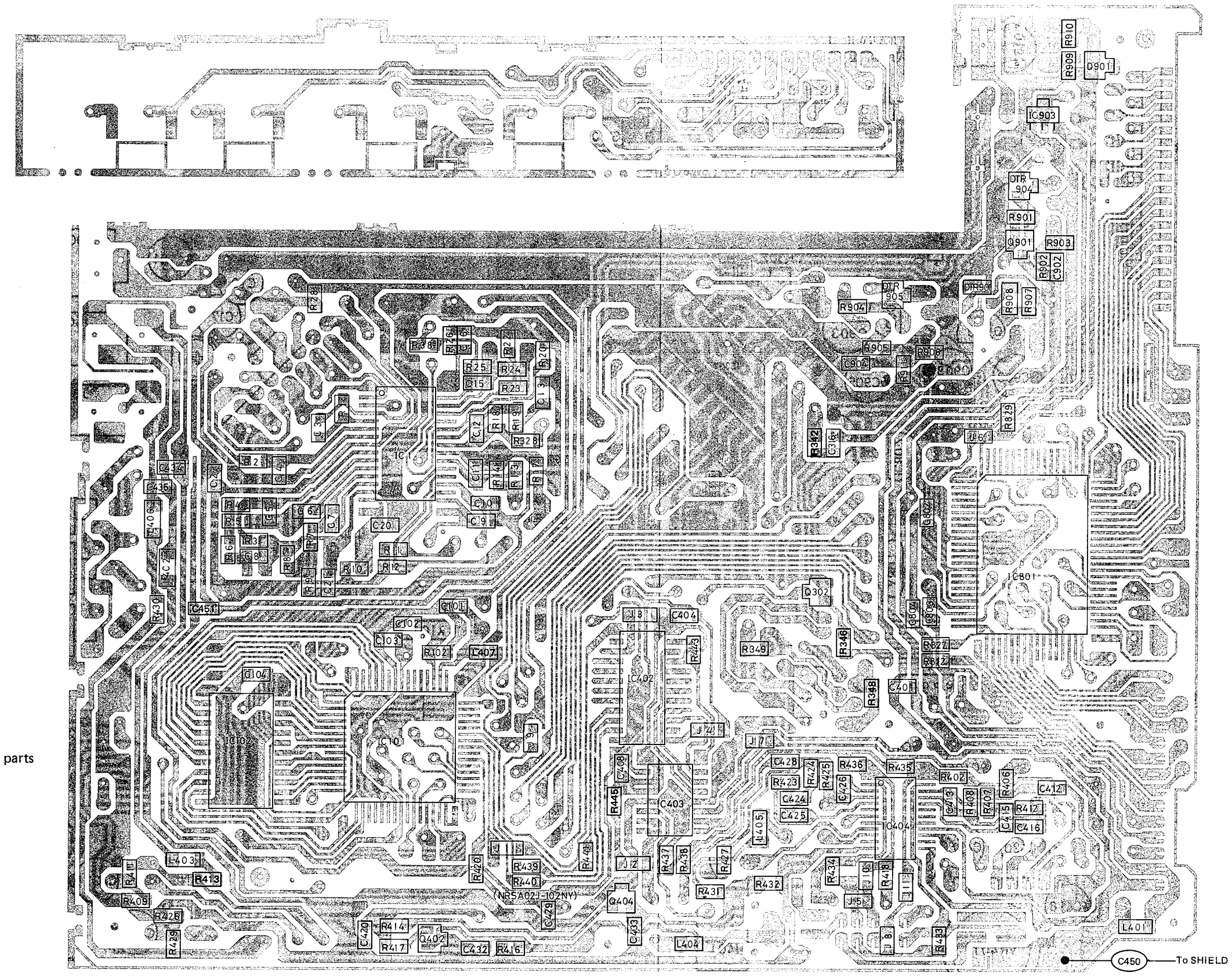

: Chip parts

Fig 9-5

■ **Main P.C. Board : Surface Side**

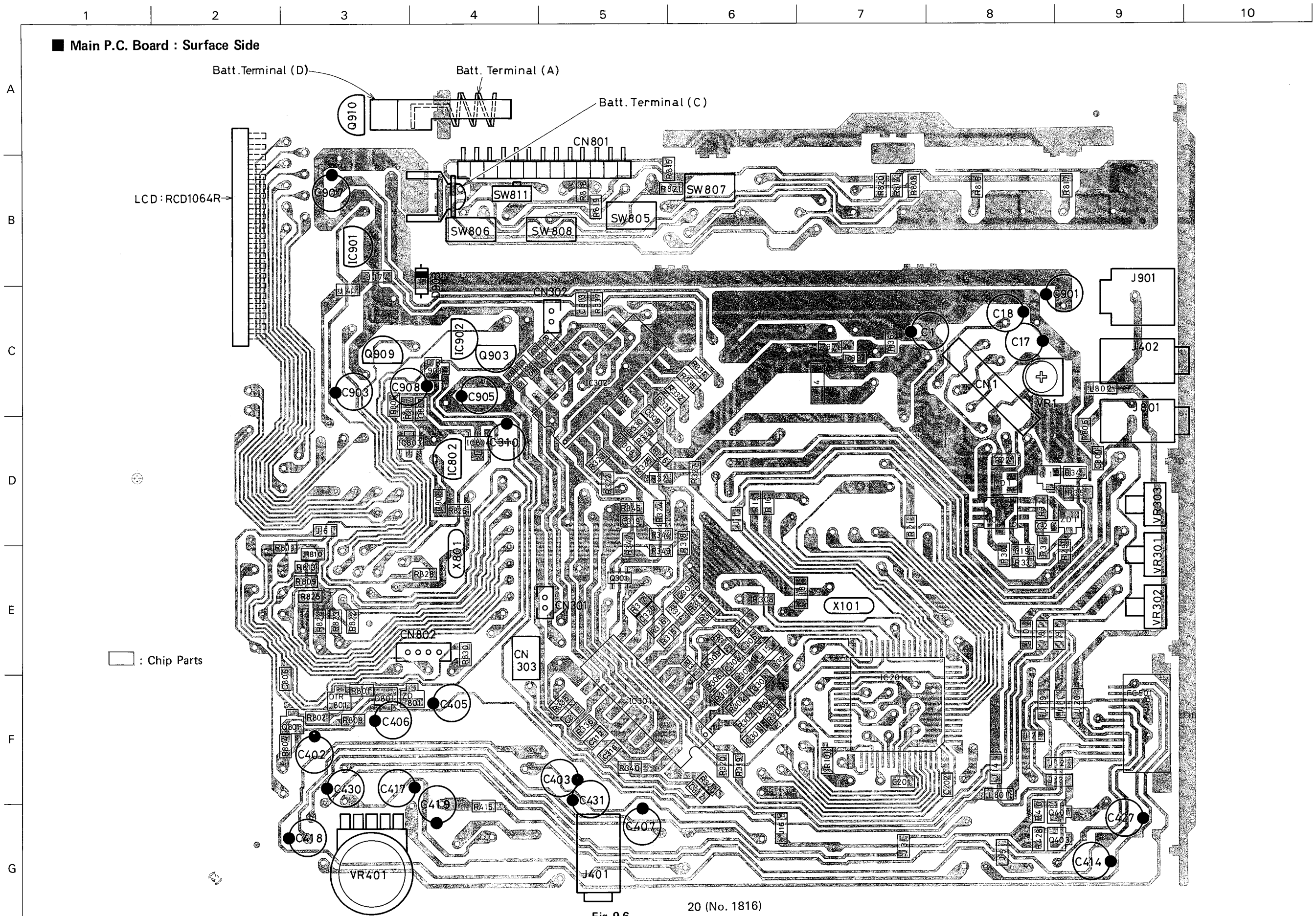

Fig 9-6

10 Erectrical Parts List

■ Sub P.C. Board

BLOCK NO. 0 1 □□□□□□□

Ref.No.	Parts No.	Parts Name	Remarks
X101	DTR801	Cera Lock	
X501	MTM74-6043	Cera Lock	
X502	MTM74-6042	Cera Lock	
X801	REM801	Cera Lock	
SW501	MTM74-6969	Tact Switch	For Frequency
SW502	MTM74-6969	Tact Switch	For SEA Level Button +
SW503	MTM74-6969	Tact Switch	For SEA Level Button -
SW504	MTM74-6969	Tact Switch	For H-Bass
SW505	MTM74-6969	Tact Switch	For Preset
SW506	MTM74-6969	Tact Switch	For Scale -
SW507	MTM74-6969	Tact Switch	For Scale +
LCD501	MTM0117002	LCD	
	MTM74-6966	Flexible Cable	
C501	NCF21EZ-104AY	Chip Capacitor	0.1μF 25V
C502	NCF21CZ-334AY	Chip Capacitor	0.33μF 16V
C503	NCT21CH-300AY	Chip Capacitor	30PF 50V
C504	NCT21CH-300AY	Chip Capacitor	30PF 50V
C505	NCT21CH-300AY	Chip Capacitor	30PF 50V
C506	NCT21CH-300AY	Chip Capacitor	30PF 50V
C507	NEF10JM-225AY	Chip Capacitor	2.2μF 16V
C601	NEF10JM-475AY	Chip Capacitor	4.7μF 16V
C602	NEF10JM-475AY	Chip Capacitor	4.7μF 16V
C603	NCT21CH-270AY	Chip Capacitor	27PF 50V
C604	NEF10JM-475AY	Chip Capacitor	4.7μF 16V
C605	NCT21CH-270AY	Chip Capacitor	27PF 50V
C606	NCF21EZ-104AY	Chip Capacitor	0.1μF 25V
C607	NCF21CZ-684AY	Chip Capacitor	0.68μF 16V
C608	NCB21EK-332AY	Chip Capacitor	3300PF 50V
C609	NCF21EZ-224AY	Chip Capacitor	0.22μF 25V
C610	NCB21EK-821AY	Chip Capacitor	820PF 50V
C611	NCF21HK-683AY	Chip Capacitor	0.068μF 16V
C612	NCT21CH-221AY	Chip Capacitor	220PF 50V
C613	NCB21HK-223AY	Chip Capacitor	0.022μF 50V
C614	NCT21CH-470AY	Chip Capacitor	47PF 50V
C615	NCB21EK-682AY	Chip Capacitor	6800PF 50V
C616	NCT21CH-220AY	Chip Capacitor	22PF 50V
C617	NCF21CZ-684AY	Chip Capacitor	0.68μF 16V
C618	NCB21EK-332AY	Chip Capacitor	3300PF 50V
C619	NCF21EZ-224AY	Chip Capacitor	0.22μF 25V
C620	NCB21EK-821AY	Chip Capacitor	820PF 50V
C621	NCF21HK-683AY	Chip Capacitor	0.068μF 16V
C622	NCT21CH-221AY	Chip Capacitor	220PF 50V
C623	NCB21HK-223AY	Chip Capacitor	0.022μF 50V
C624	NCT21CH-470AY	Chip Capacitor	47PF 50V
C625	NCB21EK-682AY	Chip Capacitor	6800PF 50V
C626	NCT21CH-220AY	Chip Capacitor	22PF 50V
C627	NCB21HK-153AY	Chip Capacitor	0.015μF 50V
C628	QCF81CZ-105AY	Chip Capacitor	1.0μF 16V
C629	NCB21EK-332AY	Chip Capacitor	3300PF 50V
C630	NCF21CZ-334AY	Chip Capacitor	0.33μF 16V
C631	NCB21EK-821AY	Chip Capacitor	820PF 50V
C632	NCB21CK-823AY	Chip Capacitor	0.082μF 16V
C633	NCT21CH-221AY	Chip Capacitor	220PF 50V
C634	NCB21HK-223AY	Chip Capacitor	0.022μF 50V
C635	NCT21CH-820AY	Chip Capacitor	82PF 50V
C636	NCB21HK-822AY	Chip Capacitor	8200PF 50V
R501	NRSA02J-134NY	Chip Registor	130kΩ 1/10W
R502	NRSA02J-134NY	Chip Registor	130kΩ 1/10W
R503	NRSA02J-134NY	Chip Registor	130kΩ 1/10W
R504	NRSA02J-134NY	Chip Registor	130kΩ 1/10W
R505	NRSA02J-134NY	Chip Registor	130kΩ 1/10W
R506	NRSA02J-134NY	Chip Registor	130kΩ 1/10W
R507	NRSA02J-134NY	Chip Registor	130kΩ 1/10W
R508	NRSA02J-134NY	Chip Registor	130kΩ 1/10W
R509	NRSA02J-134NY	Chip Registor	130kΩ 1/10W
R510	NRSA02J-134NY	Chip Registor	130kΩ 1/10W
R511	NRSA02J-134NY	Chip Registor	130kΩ 1/10W
R512	NRSA02J-134NY	Chip Registor	130kΩ 1/10W
R513	NRSA02J-134NY	Chip Registor	130kΩ 1/10W
R514	NRSA02J-103NY	Chip Registor	10kΩ 1/10W
R515	NRSA02J-104NY	Chip Registor	100kΩ 1/10W
R516	NRSA02J-104NY	Chip Registor	100kΩ 1/10W
R601	NRSA02J-821NY	Chip Registor	820Ω 1/10W
R602	NRSA02J-132NY	Chip Registor	1.3kΩ 1/10W
R603	NRSA02J-223NY	Chip Registor	22kΩ 1/10W
R604	NRSA02J-223NY	Chip Registor	22kΩ 1/10W
R605	NRSA02J-223NY	Chip Registor	22kΩ 1/10W
R606	NRSA02J-224NY	Chip Registor	220kΩ 1/10W
R607	NRSA02J-223NY	Chip Registor	22kΩ 1/10W
R608	NRSA02J-224NY	Chip Registor	220kΩ 1/10W
R609	NRSA02J-512NY	Chip Registor	5.1kΩ 1/10W
R610	NRSA02J-123NY	Chip Registor	12kΩ 1/10W
R611	NRSA02J-123NY	Chip Registor	12kΩ 1/10W
R612	NRSA02J-185NY	Chip Registor	1.8MΩ 1/10W
R613	NRSA02J-132NY	Chip Registor	1.3kΩ 1/10W
R614	NRSA02J-822NY	Chip Registor	8.2kΩ 1/10W
R615	NRSA02J-185NY	Chip Registor	1.8MΩ 1/10W
R616	NRSA02J-182NY	Chip Registor	1.8kΩ 1/10W
R617	NRSA02J-822NY	Chip Registor	8.2kΩ 1/10W
R618	NRSA02J-185NY	Chip Registor	1.8MΩ 1/10W
R619	NRSA02J-152NY	Chip Registor	1.5kΩ 1/10W
R620	NRSA02J-822NY	Chip Registor	8.2kΩ 1/10W
R621	NRSA02J-185NY	Chip Registor	1.8MΩ 1/10W
R622	NRSA02J-152NY	Chip Registor	1.5kΩ 1/10W
R623	NRSA02J-822NY	Chip Registor	8.2kΩ 1/10W
R624	NRSA02J-185NY	Chip Registor	1.8MΩ 1/10W
R625	NRSA02J-152NY	Chip Registor	1.5kΩ 1/10W
R626	NRSA02J-822NY	Chip Registor	8.2kΩ 1/10W
R627	NRSA02J-185NY	Chip Registor	1.8MΩ 1/10W
R628	NRSA02J-132NY	Chip Registor	1.3kΩ 1/10W
R629	NRSA02J-822NY	Chip Registor	8.2kΩ 1/10W

Ref.No.	Parts No.	Parts Name	Remarks	
R630	NRSA02J-185NY	Chip Registor	1.8MΩ	1/10W
R631	NRSA02J-182NY	Chip Registor	1.8kΩ	1/10W
R632	NRSA02J-822NY	Chip Registor	8.2kΩ	1/10W
R633	NRSA02J-185NY	Chip Registor	1.8MΩ	1/10W
R634	NRSA02J-152NY	Chip Registor	1.5kΩ	1/10W
R635	NRSA02J-822NY	Chip Registor	8.2kΩ	1/10W
R636	NRSA02J-185NY	Chip Registor	1.8MΩ	1/10W
R637	NRSA02J-152NY	Chip Registor	1.5kΩ	1/10W
R638	NRSA02J-822NY	Chip Registor	8.2kΩ	1/10W
R639	NRSA02J-185NY	Chip Registor	1.8MΩ	1/10W
R640	NRSA02J-152NY	Chip Registor	1.5kΩ	1/10W
R641	NRSA02J-822NY	Chip Registor	8.2kΩ	1/10W
R642	NRSA02J-394NY	Chip Registor	390kΩ	1/10W
R643	NRSA02J-103NY	Chip Registor	10kΩ	1/10W
R644	NRSA02J-152NY	Chip Registor	1.5kΩ	1/10W
R645	NRSA02J-394NY	Chip Registor	390kΩ	1/10W
R646	NRSA02J-244NY	Chip Registor	240kΩ	1/10W
R647	NRSA02J-102NY	Chip Registor	1kΩ	1/10W
R648	NRSA02J-390NY	Chip Registor	390kΩ	1/10W
R649	NRSA02J-273NY	Chip Registor	27kΩ	1/10W
R650	NRSA02J-102NY	Chip Registor	1.0kΩ	1/10W
R651	NRSA02J-364NY	Chip Registor	360kΩ	1/10W
R652	NRSA02J-823NY	Chip Registor	82kΩ	1/10W
R653	NRSA02J-911NY	Chip Registor	910Ω	1/10W
R654	NRSA02J-394NY	Chip Registor	390kΩ	1/10W
R655	NRSA02J-273NY	Chip Registor	27kΩ	1/10W
R656	NRSA02J-102NY	Chip Registor	1kΩ	1/10W
R657	NRSA02J-332NY	Chip Registor	3.3kΩ	1/10W
R658	NRSA02J-332NY	Chip Registor	3.3kΩ	1/10W
R659	NRSA02J-332NY	Chip Registor	3.3kΩ	1/10W
R660	NRSA02J-332NY	Chip Registor	3.3kΩ	1/10W
R661	NRSA02J-392NY	Chip Registor	3.9kΩ	1/10W
R662	NRSA02J-392NY	Chip Registor	3.9kΩ	1/10W
R663	NRSA02J-392NY	Chip Registor	3.9kΩ	1/10W
R664	NRSA02J-392NY	Chip Registor	3.9kΩ	1/10W
R665	NRSA02J-102NY	Chip Registor	1kΩ	1/10W
R666	NRSA02J-102NY	Chip Registor	1kΩ	1/10W
R667	NRSA02J-102NY	Chip Registor	1kΩ	1/10W
R668	NRSA02J-103NY	Chip Registor	10kΩ	1/10W
R669	NRSA02J-153NY	Chip Registor	15kΩ	1/10W
IC 1	TA8101F	IC		
IC 2	NJM3404AM	IC		
IC101	TC9200BF	IC		
IC102	LC3517AML-15	IC		
IC201	TC9201BF	IC		
IC301	KA6104A	IC		
IC302	KA6104A	IC		
IC402	SM5818AS	IC		
IC403	UPD6376GS	IC		
IC404	M51568FP	IC		
IC501	TMP47C446A	IC		
IC601	TC9187AF	IC		

Ref.No.	Parts No.	Parts Name	Remarks
IC602	NJM3403AM	IC	
IC603	NJM3403AM	IC	
IC801	TMP47C820F	IC	
IC802	S8053ANO	IC	
IC803	S8054ALB-LM	IC	
IC804	S8054ALB-LM	IC	
IC901	M5237L	IC	
IC902	M5237L	IC	
IC903	NJU7201U40	IC	
D501	DA106KT	Diode	
D502	DA106KT	Diode	
DQ501	DTC114EK	Digital Transistor	
DQ502	DTC114EK	Digital Transistor	
Q601	2SC2812-L6	Transistor	
Q602	2SC2812-L6	Transistor	
Q603	2SC2812-L6	Transistor	
Q604	2SC2812-L6	Transistor	
Q605	2SC2812-L6	Transistor	
Q606	2SC2812-L6	Transistor	
Q607	2SC2812-L6	Transistor	
Q608	2SC2812-L6	Transistor	
Q609	2SC2812-L6	Transistor	
Q610	2SC2812-L6	Transistor	

■ **Home Audio Station Unit : Parts No. MTM74-6997A/Model name : AC-RS2**

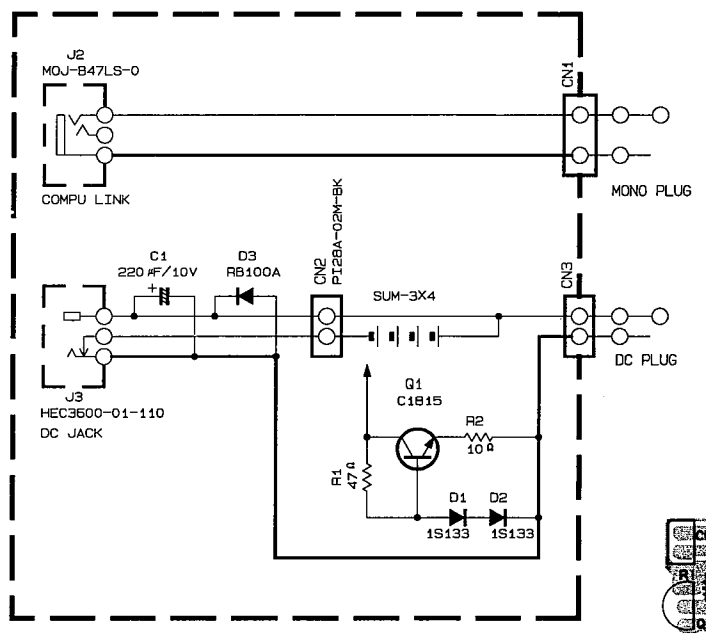

Fig. 9-7

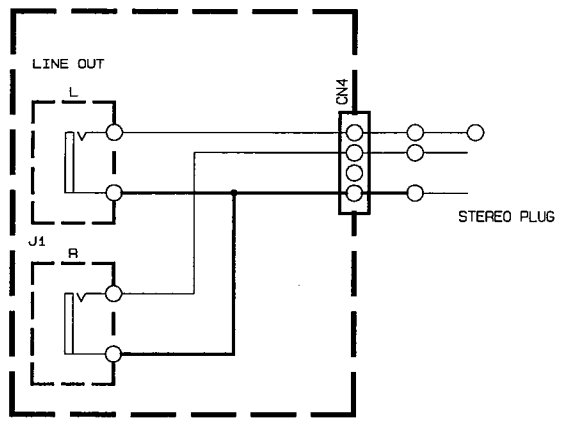

Fig. 9-8

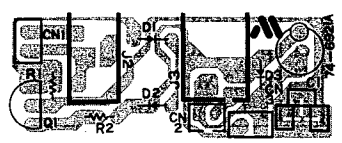

Fig. 9-9

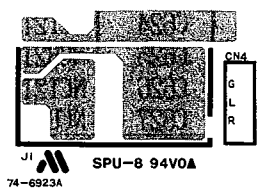

Fig. 9-10

■ Main P.C. Board Parts List

BLOCK NO. 0 2 □ □ □ □ □ □

Ref No	Parts No.	Parts Name	Remarks	
C 1	MTM74-6719B	OS Capacitor	3.3μF	16V
C 2	NCF21EZ-104AY	Chip Capacitor	0.1μF	25V
C 3	NCT21CH-560AY	Chip Capacitor	56PF	50V
C 4	NCT21CH-560AY	Chip Capacitor	56PF	50V
C 5	MTM74-6008E	Chip Capacitor	2PF	50V
C 6	NCF21HZ-103AY	Chip Capacitor	0.01μF	50V
C 7	NCF21HZ-103AY	Chip Capacitor	0.01μF	50V
C 8	NCT21CH-100AY	Chip Capacitor	10PF	50V
C 9	NCT21CH-560AY	Chip Capacitor	56PF	50V
C 10	NCT21CH-560AY	Chip Capacitor	56PF	50V
C 11	NCT21CH-680AY	Chip Capacitor	68PF	50V
C 12	NCB21HK-102AY	Chip Capacitor	1000PF	50V
C 13	QCY81EK-473Y	Chip Capacitor	0.047μF	25V
C 14	MTM74-6804D	Tantalum Capacitor	22μF	6.3V
C 15	NCT21CH-560AY	Chip Capacitor	56PF	50V
C 16	NCT21CH-560AY	Chip Capacitor	56PF	50V
C 17	QETBOJM-336	E. Capacitor	33μF	6.3V
C 18	MTM74-6719B	OS Capacitor	3.3μF	16V
C 19	NCF21EZ-104AY	OS Capacitor	0.1μF	25V
C 20	NCT21CH-300AY	Chip Capacitor	30PF	50V
C 21	NCF21EZ-104AY	OS Capacitor	0.1μF	25V
C 22	NCF21EZ-104AY	OS Capacitor	0.1μF	25V
C101	NCT21CH-100AY	OS Capacitor	10PF	50V
C102	NCT21CH-100AY	OS Capacitor	10PF	50V
C103	NCF21EZ-104AY	OS Capacitor	0.1μF	25V
C104	NCF21EZ-104AY	OS Capacitor	0.1μF	25V
C201	NCF21EZ-104AY	OS Capacitor	0.1μF	25V
C202	QCF81HZ-334Y	E. Capacitor	0.33μ	50V
C301	QCF81HZ-154Y	E. Capacitor	0.15μF	50V
C302	NCB21HK-332AY	Chip Capacitor	3300PF	50V
C303	NCB21HK-183AY	Chip Capacitor	0.018μF	50V
C304	NCB21HK-152AY	Chip Capacitor	1500PF	50V
C306	NCB21HK-153AY	Chip Capacitor	0.015μF	50V
C307	MTM74-6804AY	Tantalum Capacitor	2.2μF	6.3V
C308	QCY81EK-473Y	Chip Capacitor	0.047μF	25V
C309	NCB21HK-392AY	Chip Capacitor	3900PF	50V
C310	QETBOJM-101AY	E. Capacitor	100μF	6.3V
C311	NCF21EZ-104AY	Chip Capacitor	0.1μF	25V
C312	NCF21EZ-104AY	Chip Capacitor	0.1μF	25V
C313	NCF21EZ-104AY	Chip Capacitor	0.1μF	25V
C314	NCF21EZ-104AY	Chip Capacitor	0.1μF	25V
C315	NCF21EZ-104AY	Chip Capacitor	0.1μF	25V
C316	NCF21EZ-104AY	Chip Capacitor	0.1μF	25V
C317	NCF21EZ-104AY	Chip Capacitor	0.1μF	25V
C318	NCF21EZ-104AY	Chip Capacitor	0.1μF	25V
C319	NCF21EZ-104AY	Chip Capacitor	0.1μF	25V
C320	NCF21EZ-104AY	Chip Capacitor	0.1μF	25V
C401	NCF21EZ-104AY	Chip Capacitor	0.1μF	25V
C402	QEK60JM-227	E. Capacitor	220μF	6.3V
C403	QEK60JM-227	E. Capacitor	220μF	6.3V
C404	NCF21EZ-104AY	E. Capacitor	0.1μF	25V
C405	QETBOJM-470AY	E. Capacitor	47μF	6.3V
C406	QETBOJM-470AY	E. Capacitor	47μF	6.3V
C407	QETBOJM-470AY	E. Capacitor	47μF	6.3V
C408	NCF21EZ-104AY	E. Capacitor	0.1μF	25V

Ref No	Parts No.	Parts Name	Remarks	
C412	NCB21HK-392AY	Chip Capacitor	3900PF	50V
C413	NCB21HK-471AY	Chip Capacitor	470PF	50V
C414	QETB0JM-100AY	E. Capacitor	10μF	6.3V
C415	NCT21CH-561AY	E. Capacitor	560PF	50V
C416	NCB21HK-122AY	Chip Capacitor	1200PF	50V
C417	QETB0JM-2R2AY	E. Capacitor	2.2μF	50V
C418	QEK60JM-221AY	E. Capacitor	220μF	6.3V
C419	QEK60JM-221AY	E. Capacitor	220μF	6.3V
C420	NCF21HZ-103AY	Chip Capacitor	0.01μF	50V
C424	NCB21HK-122AY	Chip Capacitor	1200PF	50V
C425	NCT21CH-561AY	Chip Capacitor	560PF	50V
C426	NCB21HK-471AY	Chip Capacitor	470PF	50V
C427	QETB0JM-100AY	E. Capacitor	10μF	6.3V
C428	NCB21HK-392AY	Chip Capacitor	3900PF	50V
C429	NCF21EZ-104AY	Chip Capacitor	0.1μF	25V
C430	QETB0JM-2R2AY	E. Capacitor	2.2μF	50V
C431	QETB0JM-470AY	E. Capacitor	47μF	6.3V
C432	NCT21CH-331AY	Chip Capacitor	330PF	50V
C433	NCT21CH-331AY	Chip Capacitor	330PF	50V
C434	NCT21CH-300AY	Chip Capacitor	30PF	50V
C435	NCT21CH-300AY	Chip Capacitor	30PF	50V
C450	NCT21CH-104AY	Chip Capacitor	0.1μ	50V
C451	NCT21CH-151AY	Chip Capacitor	150P	50V
C801	NCT21CH-331AY	Chip Capacitor	330PF	50V
C802	NCT21CH-300AY	Chip Capacitor	30PF	50V
C803	NCT21CH-300AY	Chip Capacitor	30PF	50V
C804	NCF21EZ-104AY	Chip Capacitor	0.1μF	25V
C805	MTM74-6804A	Tantalum Capacitor	2.2μF	6.3V
C806	NCF21CZ-334AY	Chip Capacitor	0.33μF	16V
C807	NCF21CZ-334AY	Chip Capacitor	0.33μF	16V
C901	QETB1AM-477	E. Capacitor	470μF	10V
C902	NCF21EZ-104AY	Chip Capacitor	0.1μF	25V
C903	QEK60JM-227AY	E. Capacitor	220μF	6.3V
C904	NCF21EZ-104AY	Chip Capacitor	0.1μF	25V
C905	QEK60JM-227AY	E. Capacitor	220μF	6.3V
C907	QETB0JM-470AY	E. Capacitor	47μF	6.3V
C908	QETB1AM-227	E. Capacitor	220μF	10V
L401	MTM74-6869E	Inductor		
L402	MTM74-6869E	Inductor		
L403	MTM74-6869E	Inductor		
L404	MTM74-6869E	Inductor		
L405	MTM74-6869E	Inductor		
L406	MTM74-6869E	Inductor		
L407	MTM74-7049A	Inductor		
L801	MTM74-6869E	Inductor		
L802	MTM74-6869E	Inductor		
D 1	DA116	Diode		
D 1Z	RD2.0MB	Zener Diode		
D801	RB705D	Shot Key Diode		
DZ801	RD5.6M(B1)	Zener Diode		
DTR901	IMD3	Diode		
D901	DA204	Diode		
D902	RB100A	Diode		

Ref No	Parts No.	Parts Name	Remarks
DTR903	DTA114EK	Shot Key Diode	
DTR904	DTA114EK	Diode	
DTR905	DTA114EK	Diode	
D906	DA204	Diode	
R 1	NRSA02J-274NY	Chip Registor	270kΩ 1/10W
R 2	NRSA02J-224NY	Chip Registor	220kΩ 1/10W
R 3	NRSA02J-823NY	Chip Registor	82kΩ 1/10W
R 4	NRSA02J-183NY	Chip Registor	18kΩ 1/10W
R 5	NRSA02J-183NY	Chip Registor	18kΩ 1/10W
R 6	NRSA02J-103NY	Chip Registor	10kΩ 1/10W
R 7	NRSA02J-104NY	Chip Registor	100kΩ 1/10W
R 8	NRSA02J-103NY	Chip Registor	10kΩ 1/10W
R 9	NRSA02J-152NY	Chip Registor	1.5kΩ 1/10W
R 10	NRSA02J-222NY	Chip Registor	2.2kΩ 1/10W
R 11	NRSA02J-103NY	Chip Registor	10kΩ 1/10W
R 12	NRSA02J-103NY	Chip Registor	10kΩ 1/10W
R 13	NRSA02J-752NY	Chip Registor	7.5kΩ 1/10W
R 14	NRSA02J-752NY	Chip Registor	7.5kΩ 1/10W
R 15	NRSA02J-133NY	Chip Registor	13kΩ 1/10W
R 16	NRSA02J-223NY	Chip Registor	22kΩ 1/10W
R 17	NRSA02J-102NY	Chip Registor	1.0kΩ 1/10W
R 18	NRSA02J-123NY	Chip Registor	12kΩ 1/10W
R 19	NRSA02J-221NY	Chip Registor	220Ω 1/10W
R 20	NRSA02J-123NY	Chip Registor	12kΩ 1/10W
R 21	NRSA02J-104NY	Chip Registor	100kΩ 1/10W
R 22	NRSA02J-123NY	Chip Registor	12kΩ 1/10W
R 23	NRSA02J-123NY	Chip Registor	12kΩ 1/10W
R 24	NRSA02J-102NY	Chip Registor	1.0kΩ 1/10W
R 25	NRSA02J-134NY	Chip Registor	130kΩ 1/10W
R 26	NRSA02J-134NY	Chip Registor	130kΩ 1/10W
R 27	NRSA02J-910NY	Chip Registor	91Ω 1/10W
R 28	NRSA02J-102NY	Chip Registor	1.0kΩ 1/10W
R 29	NRSA02J-301NY	Chip Registor	300Ω 1/10W
R 30	NRSA02J-472NY	Chip Registor	4.7kΩ 1/10W
R 31	NRSA02J-513NY	Chip Registor	51kΩ 1/10W
R 32	NRSA02J-472NY	Chip Registor	4.7kΩ 1/10W
R 33	NRSA02J-474NY	Chip Registor	470kΩ 1/10W
R 34	NRSA02K-4R7NY	Chip Registor	4.7Ω 1/10W
R 35	MTM74-6028C	Chip Registor	6.8Ω 1/4W
R 36	NRSA02J-104NY	Chip Registor	100kΩ 1/10W
R 37	NRSA02J-153NY	Chip Registor	15kΩ 1/10W
R 38	NRSA02J-105NY	Chip Registor	1MΩ 1/10W
R 39	NRSA02J-153NY	Chip Registor	15kΩ 1/10W
R101	NRSA02J-185NY	Chip Registor	1.0kΩ 1/10W
R102	NRSA02J-185NY	Chip Registor	1.8MΩ 1/10W
R301	NRSA02J-683NY	Chip Registor	68kΩ 1/10W
R302	NRSA02J-274NY	Chip Registor	270kΩ 1/10W
R303	NRSA02J-562NY	Chip Registor	5.6kΩ 1/10W
R304	NRSA02J-561NY	Chip Registor	560Ω 1/10W
R305	NRSA02J-333NY	Chip Registor	33kΩ 1/10W
R306	NRSA02J-184NY	Chip Registor	180kΩ 1/10W
R307	NRSA02J-473NY	Chip Registor	47kΩ 1/10W
R308	NRSA02J-185NY	Chip Registor	1.8MΩ 1/10W
R309	NRSA02J-222NY	Chip Registor	2.2kΩ 1/10W

Ref No	Parts No.	Parts Name	Remarks	
R310	NRSA02J-184NY	Chip Registor	180kΩ	1/10W
R311	NRSA02J-153NY	Chip Registor	15kΩ	1/10W
R312	NRSA02J-102NY	Chip Registor	1kΩ	1/10W
R313	NRSA02J-154NY	Chip Registor	150kΩ	1/10W
R314	NRSA02J-332NY	Chip Registor	3.3kΩ	1/10W
R315	NRSA02J-154NY	Chip Registor	150kΩ	1/10W
R316	NRSA02J-152NY	Chip Registor	1.5kΩ	1/10W
R317	NRSA02J-563NY	Chip Registor	56kΩ	1/10W
R318	NRSA02J-304NY	Chip Registor	300kΩ	1/10W
R319	NRSA02J-334NY	Chip Registor	330kΩ	1/10W
R320	NRSA02J-514NY	Chip Registor	510kΩ	1/10W
R321	NRSA02J-514NY	Chip Registor	510kΩ	1/10W
R322	NRSA02J-754NY	Chip Registor	750kΩ	1/10W
R323	NRSA02J-334NY	Chip Registor	330kΩ	1/10W
R324	NRSA02J-102NY	Chip Registor	1kΩ	1/10W
R325	NRSA02J-222NY	Chip Registor	2.2kΩ	1/10W
R326	NRSA02J-303NY	Chip Registor	30kΩ	1/10W
R327	NRSA02J-754NY	Chip Registor	750kΩ	1/10W
R328	NRSA02J-332NY	Chip Registor	3.3kΩ	1/10W
R329	NRSA02J-223NY	Chip Registor	22kΩ	1/10W
R330	NRSA02J-754NY	Chip Registor	750kΩ	1/10W
R331	NRSA02J-224NY	Chip Registor	220kΩ	1/10W
R332	NRSA02J-154NY	Chip Registor	150kΩ	1/10W
R333	NRSA02J-222NY	Chip Registor	2.2kΩ	1/10W
R334	NRSA02J-911NY	Chip Registor	910Ω	1/10W
R335	NRSA02J-1R2NY	Chip Registor	1.2Ω	1/10W
R336	NRSA02K-1R2NY	Chip Registor	1.2Ω	1/10W
R337	NRSA02K-1R2NY	Chip Registor	1.2Ω	1/10W
R338	NRSA02K-1R2NY	Chip Registor	1.2Ω	1/10W
R339	NRSA02K-1R2NY	Chip Registor	1.2Ω	1/10W
R340	NRSA02K-1R2NY	Chip Registor	1.2Ω	1/10W
R341	NRSA02K-1R2NY	Chip Registor	1.2Ω	1/10W
R342	NRSA02K-1R2NY	Chip Registor	1.2Ω	1/10W
R343	NRSA02J-275NY	Chip Registor	2.7MΩ	1/10W
R344	NRSA02J-103NY	Chip Registor	10kΩ	1/10W
R345	NRSA02J-224NY	Chip Registor	220kΩ	1/10W
R346	NRSA02J-103NY	Chip Registor	10kΩ	1/10W
R347	NRSA02J-103NY	Chip Registor	10kΩ	1/10W
R348	NRSA02J-1R2NY	Chip Registor	1.2Ω	1/10W
R349	NRSA02J-1R2NY	Chip Registor	1.2Ω	1/10W
R402	NRSA02J-563NY	Chip Registor	56kΩ	1/10W
R406	NRSA02J-392NY	Chip Registor	3.9kΩ	1/10W
R407	NRSA02J-472NY	Chip Registor	4.7kΩ	1/10W
R408	NRSA02J-472NY	Chip Registor	4.7kΩ	1/10W
R409	NRSA02J-104NY	Chip Registor	100kΩ	1/10W
R410	NRSA02J-103NY	Chip Registor	10kΩ	1/10W
R411	NRSA02J-152NY	Chip Registor	1.5kΩ	1/10W
R412	NRSA02J-103NY	Chip Registor	10kΩ	1/10W
R413	NRSA02J-101NY	Chip Registor	100Ω	1/10W
R414	NRSA02J-471NY	Chip Registor	470Ω	1/10W
R415	NRSA02J-100NY	Chip Registor	10Ω	1/10W
R416	NRSA02J-103NY	Chip Registor	10kΩ	1/10W
R417	NRSA02J-471NY	Chip Registor	470Ω	1/10W
R418	NRSA02J-563NY	Chip Registor	56kΩ	1/10W
R420	NRSA02J-102NY	Chip Registor	1.0kΩ	1/10W

Ref No	Parts No.	Parts Name	Remarks	
R423	NRSA02J-103NY	Chip Registor	10kΩ	1/10W
R424	NRSA02J-472NY	Chip Registor	4.7kΩ	1/10W
R425	NRSA02J-472NY	Chip Registor	4.7kΩ	1/10W
R426	NRSA02J-104NY	Chip Registor	100kΩ	1/10W
R427	NRSA02J-392NY	Chip Registor	3.9kΩ	1/10W
R428	NRSA02J-103NY	Chip Registor	10kΩ	1/10W
R429	NRSA02J-152NY	Chip Registor	1.5kΩ	1/10W
R430	NRSA02J-101NY	Chip Registor	100Ω	1/10W
R431	NRSA02J-100NY	Chip Registor	10Ω	1/10W
R432	NRSA02J-103NY	Chip Registor	10kΩ	1/10W
R433	NRSA02J-153NY	Chip Registor	15kΩ	1/10W
R434	NRSA02J-153NY	Chip Registor	15kΩ	1/10W
R435	NRSA02J-105NY	Chip Registor	1MΩ	1/10W
R436	NRSA02J-105NY	Chip Registor	1MΩ	1/10W
R437	NRSA02J-105NY	Chip Registor	1MΩ	1/10W
R438	NRSA02J-203NY	Chip Registor	20kΩ	1/10W
R439	NRSA02J-102NY	Chip Registor	1.0kΩ	1/10W
R440	NRSA02J-102NY	Chip Registor	1.0kΩ	1/10W
R441	NRSA02J-102NY	Chip Registor	1.0kΩ	1/10W
R443	NRSA02J-102NY	Chip Registor	1.0kΩ	1/10W
R445	NRSA02J-100NY	Chip Registor	10Ω	1/10W
R801	NRSA02J-471NY	Chip Registor	470Ω	1/10W
R802	NRSA02J-134NY	Chip Registor	130kΩ	1/10W
R803	NRSA02J-473NY	Chip Registor	47kΩ	1/10W
R804	NRSA02J-183NY	Chip Registor	18kΩ	1/10W
R805	NRSA02J-100NY	Chip Registor	10Ω	1/10W
R806	NRSA02J-301NY	Chip Registor	300Ω	1/10W
R807	NRSA02F-104NY	Chip Registor	100kΩ	1/10W
R808	NRSA02J-134NY	Chip Registor	130kΩ	1/10W
R809	NRSA02J-303NY	Chip Registor	30kΩ	1/10W
R810	NRSA02J-303NY	Chip Registor	30kΩ	1/10W
R811	NRSA02J-134NY	Chip Registor	130kΩ	1/10W
R812	NRSA02J-134NY	Chip Registor	130kΩ	1/10W
R813	NRSA02J-303NY	Chip Registor	30kΩ	1/10W
R814	NRSA02J-103NY	Chip Registor	10kΩ	1/10W
R815	NRSA02J-103NY	Chip Registor	10kΩ	1/10W
R816	NRSA02J-103NY	Chip Registor	10kΩ	1/10W
R817	NRSA02J-103NY	Chip Registor	10kΩ	1/10W
R818	NRSA02J-103NY	Chip Registor	10kΩ	1/10W
R819	NRSA02J-103NY	Chip Registor	10kΩ	1/10W
R820	NRSA02J-103NY	Chip Registor	10kΩ	1/10W
R821	NRSA02J-103NY	Chip Registor	10kΩ	1/10W
R822	NRSA02J-134NY	Chip Registor	130kΩ	1/10W
R823	NRSA02J-134NY	Chip Registor	130kΩ	1/10W
R824	NRSA02J-134NY	Chip Registor	130kΩ	1/10W
R825	NRSA02J-134NY	Chip Registor	130kΩ	1/10W
R826	NRSA02J-472NY	Chip Registor	4.7kΩ	1/10W
R827	NRSA02J-104NY	Chip Registor	100kΩ	1/10W
R828	NRSA02J-301NY	Chip Registor	300Ω	1/10W
R829	NRSA02J-154NY	Chip Registor	150kΩ	1/10W
R830	NRSA02J-104NY	Chip Registor	100kΩ	1/10W
R901	NRSA02J-181NY	Chip Registor	180Ω	1/10W
R902	NRSA02J-912NY	Chip Registor	9.1kΩ	1/10W
R903	NRSA02J-302NY	Chip Registor	3.0kΩ	1/10W
R904	NRSA02J-151NY	Chip Registor	150Ω	1/10W

Ref No	Parts No.	Parts Name	Remarks
R905	NRSA02J-912NY	Chip Registor	9.1kΩ 1/10W
R906	NRSA02J-432NY	Chip Registor	4.3kΩ 1/10W
R907	NRSA02J-222NY	Chip Registor	2.2kΩ 1/10W
R908	NRSA02J-391NY	Chip Registor	390Ω 1/10W
R909	NRSA02J-150NY	Chip Registor	15Ω 1/10W
R910	NRSA02J-470NY	Chip Registor	47Ω 1/10W
R911	NRSA02J-823NY	Chip Registor	82kΩ 1/10W
FC501	MTM74-7033	Flexible Cable	
J401	MTM74-6528	Jack	For Phones Out
J402	MTM74-6528	Jack	For Line Out
J801	MTM74-6528	Jack	For Com-Line
J901	MTM74-6800	Jack	For DC In
CN 1	MTM74-6246	Connector	
CN301	MTM74-6795	Connector	
CN302	MTM74-6870	Connector	
CN303	MTM74-6246	Connector	
CN801	MTM74-6798	Connector	For Com Line
CN802	MTM74-6795	Connector	
VR 1	MTM74-6878	Semi-Fixed Volume	
VR301	MTM74-6846	Semi-Fixed Volume	
VR302	MTM74-6846	Semi-Fixed Volume	
VR303	MTM74-6846	Semi-Fixed Volume	
VR401	MTM74-6801	Volume	
SW801	MTM74-6799A	Tact Switch	For Stop
SW802	MTM74-6799A	Tact Switch	For Play/Pause
SW803	MTM74-6799A	Tact Switch	For Forward Search
SW804	MTM74-6799A	Tact Switch	For Rewind Search
SW805	MTM74-6201	Tact Switch	For Repeat
SW806	MTM74-6201	Tact Switch	For Intro
SW807	MTM74-6201	Tact Switch	For Memory
SW808	MTM74-6201	Tact Switch	For Random
SW809	MTM74-6201	Tact Switch	
SW810	MTM74-6201	Tact Switch	
SW811	MTM74-6526	Slide Switch	For Hold
LCD801	MTM0110908	LCD	
Q 1	2SC2812L-6HL	Transistor	
Q301	IMZ2	Digital Transistor	
Q302	2SA1037K(R,S)	Transistor	
Q401	2SD1757K(R,S)	Transistor	
Q402	2SD1757K(R,S)	Transistor	
Q403	2SD1757K(R,S)	Transistor	
Q404	2SD1757K(R,S)	Transistor	
Q801	2SC2812L-6HL	Transistor	
Q901	2SA1037K(R,S)	Transistor	
Q903	2SA935T	Transistor	
Q909	2SA1515	Transistor	
Q910	2SC1815	Transistor	

11 Exploded View of CD Mechanism Component Parts and Parts List

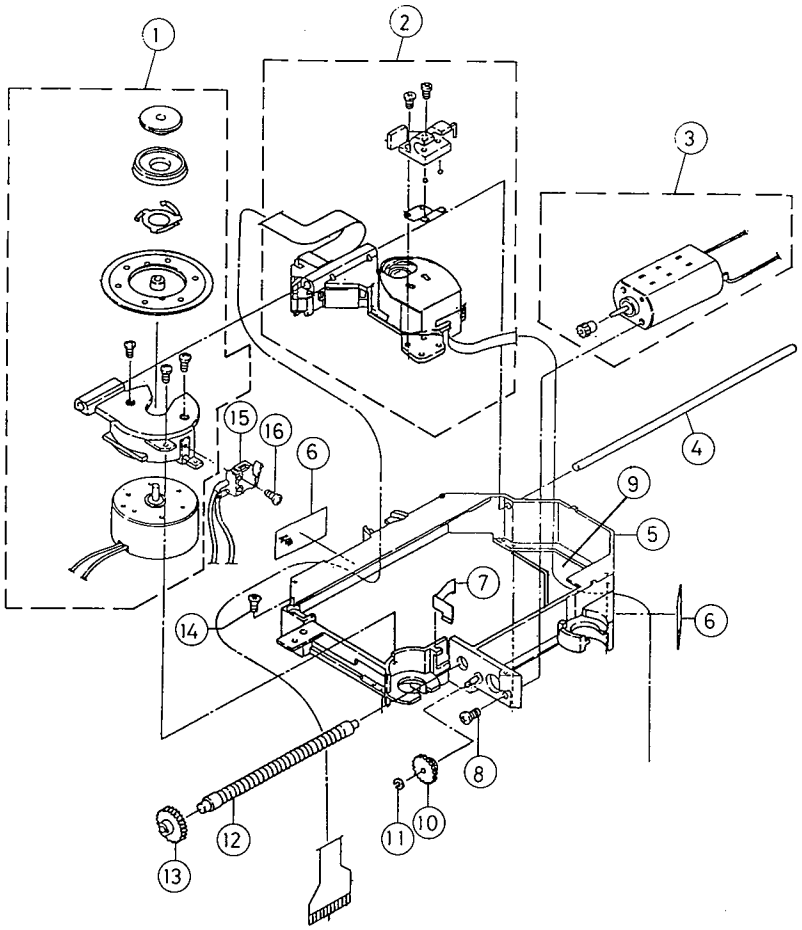

Fig. 11-1

■ CD Mechanicm Component Parts List

BLOCK NO. M1MM□□□□

Ref. No.	Parts No.	Parts Name	Remarks	Q'ty
1	**MTM74-6948A**	**Spindle Motor Ass'y**		1
2	**MTM74-6949A**	**Pickup Ass'y**		1
3	**MTM74-6950A**	**Feed Motor Ass'y**		1
4	MTM74-6649A	Guide Shaft		1
5	MTM74-6991A	CD Frame		1
6	MTM74-5069A	Tape		2
7	MTM74-6608A	Spring		1
8	MTM74-5040M	Screw		1
9	MTM74-6879B	Reinforcement Plate		1
10	MTM74-6604A	Gear 2		1
11	MTM74-6644A	Washer		1
12	MTM74-6645A	Feed Screw		1
13	MTM74-6605A	Gear 3		1
14	MTM74-6635A	Tapping Screw		1
15	MTM74-6633A	Mechanism Switch		1
16	MTM74-5039A	Tapping Screw		1

12 Exploded View of Enclosure Component Parts and Parts List

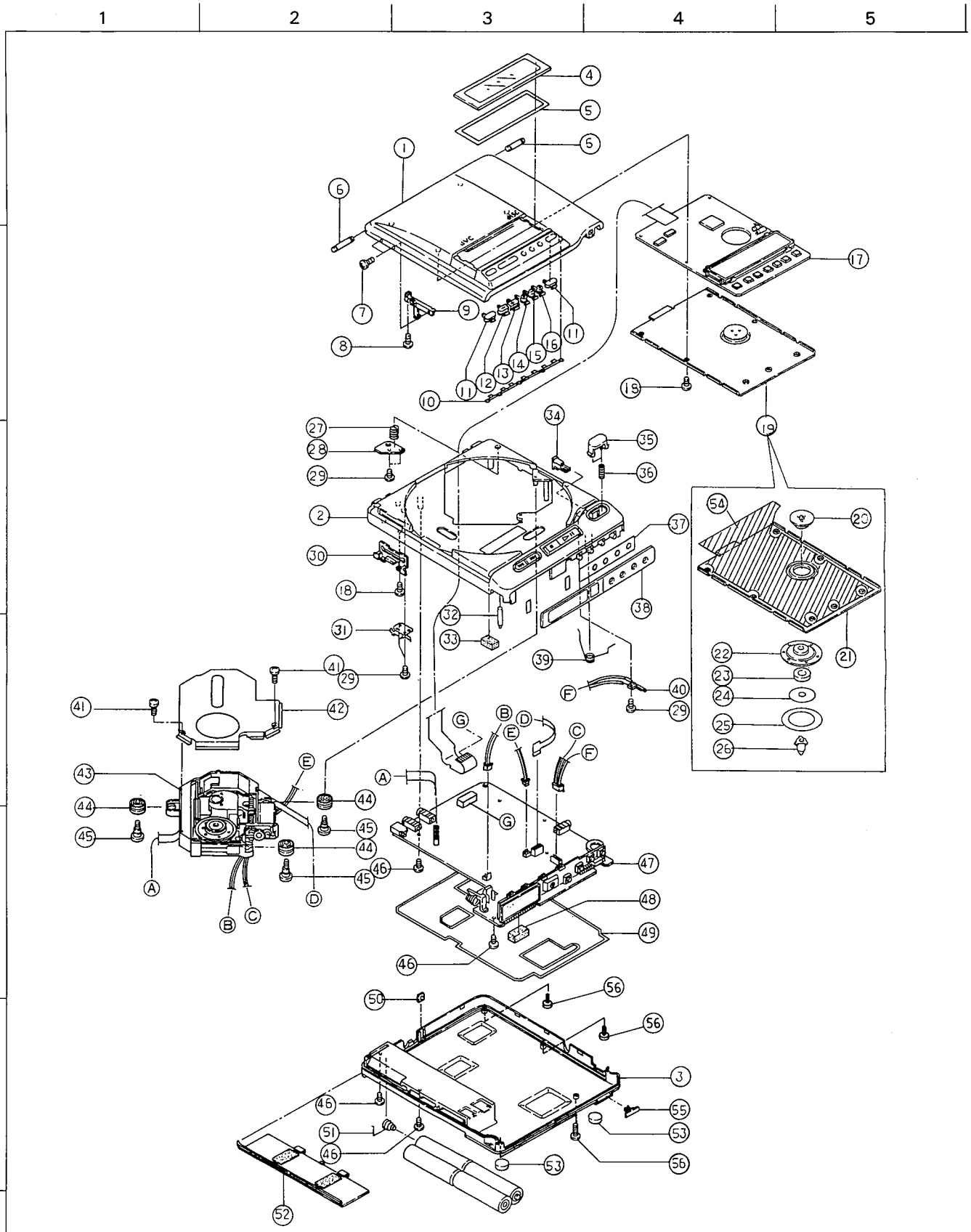

Fig 12-1

■ Enclosure Assembly Parts List

BLOCK NO. M2MM□□□□

Ref.No.	Parts No.	Parts Name	Remarks	Q'ty
2,37,38	ZCXLP70K-TPA	TOP PANEL ASS'Y		1
19	MTM74-6943A	CLUMP MAGNET ASS'Y		1
1	MTM74-6864A	CD UPPER CASE		1
2	MTM74-6738B	UNIT CASE		1
3	MTM74-6740B	BOTTOM COVER		1
4	MTM74-6862A	TOP LENS		1
5	MTM74-6906A	BOTH FACES TAPE (2)	FOR TOP LENS	6
6	MTM74-6761A	DOOR SHAFT	SUS420J2	2
7	MTM74-5040S	SCREW		2
8	MTM74-6793B	SCREW		1
9	MTM74-6777A	ANGULAR PLATE ASS'Y		1
10	MTM74-6857A	SPRING	FOR SWITCH HOLDER	1
11	MTM74-6859A	FUNCTION SWITCH B		2
12	MTM74-6758A	FUNCTION SWITCH (A)		1
13	MTM74-6860A	FUNCTION SWITCH (C)		1
14	MTM74-6861D	FUNCTION SWITCH (D)		1
15	MTM74-6861D	FUNCTION SWITCH (D)		1
16	MTM74-6861D	FUNCTION SWITCH (D)		1
17	MTM74-6965A	LCD P.C.BOARD		1
18	MTM74-6793F	SCREW		9
20	MTM74-6745A	CENTER CAP		1
21	MTM74-6863A	COVER PLATE		1
22	MTM74-6753A	DISK CAP		1
23	MTM74-6775A	CLUMP MAGNET		1
24	MTM74-6773A	PROTECTION SHEET	FOR MAGNET	1
25	MTM74-6769A	PROTECTION SHEET		1
26	MTM74-6746A	CENTERING BOSS		1
27	MTM74-6764E	OPEN COLSE SPRING		1
28	MTM74-6751A	OPEN SPRING PLATE		1
29	MTM74-6793C	SCREW	ST3PP + 20040 + HZ1B	5
30	MTM74-6756A	ANGULAR PLATE		1
31	MTM74-6757A	ANGULAR SPRING		1
32	MTM74-6760A	BELT GUIDE PIN		2
33	MTM74-6910A	CUSHION	FOR CHARGING TERMINAL	1
34	MTM74-6748A	OPEN LEVER		1
35	MTM74-6747A	OPEN BUTTON		1
36	MTM74-6765A	SPRING	FOR OPEN BUTTON	2
37	MTM74-7016A	BOTH FACES TAPE (3)	FOR FRONT PANEL	1
38	MTM74-6990A	FRONT PANEL (2)		1
39	MTM74-6766A	SPRING	FOR OPEN LEVER	1
40	MTM74-6782A	LEAF SWITCH ASS'Y		1
41	MTM74-7015A	TAPPING SCREW	FOR MECHANISM COVER	2
42	MTM74-6774A	MECHANISM COVER		1
43	MTM74-6790B	CD PICK UP ASS'Y		1
44	MTM74-6885A	INSULATOR		3
45	MTM74-6904A	SPECIAL SCREW		3
46	MTM74-6793I	SCREW		4
47	MTM74-6817A	MAIN P.C.BOARD		1
48	MTM74-6908A	CUSHION	FOR LCD	1
49	MTM74-6877A	SHIELD PLATE		1
50	MTM74-6759A	SPECIAL NUT		1
51	MTM74-6768A	BATTERY TERMINAL		1
52	MTM74-6741A	BATTERY COVER		1
53	MTM74-6770A	FOOT		2
54	MTM74-7025	SHIELD SHEET		1
55	MTM74-6837A	KNOB	FOR HOLD SWITCH	1
56	MTM74-6793G	SCREW		4

13 Illustration Packing and Packing Parts List

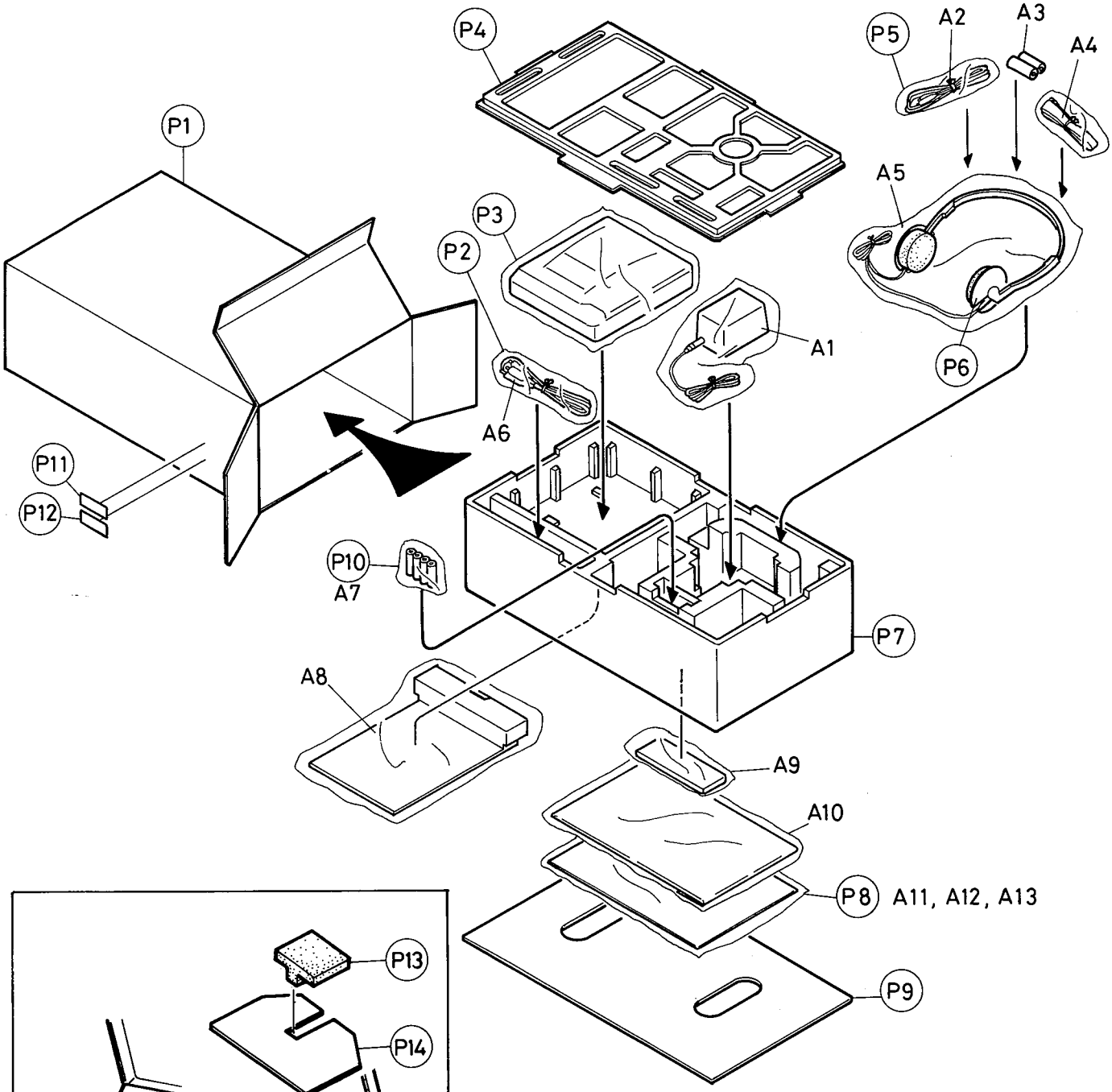

Fig 13-1

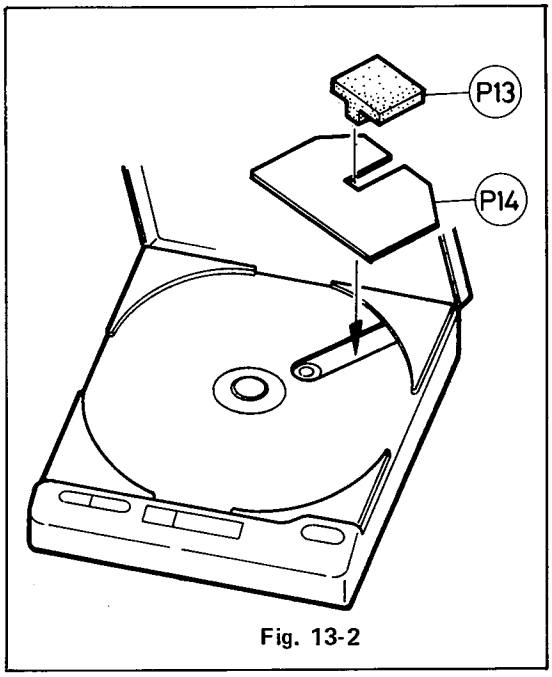

Fig. 13-2

■ Packing & Accessories Parts List

BLOCK NO. M3MM□□□□

Ref.No.	Parts No.	Parts Name	Remarks	Q'ty
P 1	MTM74-6975A	Carton		1
P 2	MTM74-6903A	Poly Bag	For Line Cord	1
P 3	MTM74-6827A	Poly Bag	For Unit	1
P 4	MTM74-6833A	Blister		1
P 5	MTM74-6903A	Poly Bag	For DCS Cord	1
P 6	MTM74-6844A	Pad	For Protect Headphone	1
P 7	MTM74-6977A	Cushion Box		1
P 8	E66416-003	Poly Bag	For Instructions,Warranty Card	1
P 9	MTM74-7028A	Cushion Board		1
P10	MTM74-6903C	Poly Bag	For Chargeable Battery	1
P11	VND3044-001	Serial Ticket	For XL-P70 U/A	1
	VND3044-002	Serial Ticket	For XL-P70 J	1
	VND3044-003	Serial Ticket	For XL-P70 E	1
	VND3044-004	Serial Ticket	For XL-P70 B	1
	VND3044-005	Serial Ticket	For XL-P70 G	1
	VND3044-006	Serial Ticket	For XL-P70 C	1
P12	MTM74-6988A	UPC Label	For XL-P70 J	1
P13	MTM74-6891A	Cushion	For Protect Pick Up Unit	1
P14	MTM74-6909A	Cushion Label	For Pick Up Unit	1
A 1	MTM74-6819A	AC Adapter	For XL-P70 J:Model Name:AA-905J	1
	MTM74-6820A	AC Adapter	For XL-P70 E/G:Include Poly Bag	1
	MTM74-6821A	AC Adapter	For XL-P70 B:Include Poly Bag	1
	MTM74-7008A	AC Adapter	For XL-P70 C:Include Poly Bag	1
	MTM74-7039A	AC Adapter	For XL-P70 U:Include Poly Bag	1
A 2	MTM74-6825A	DCS Cord		1
A 3	UM4NJ-2P	Battery	For Remote Control Unit	2
A 4	MTM74-6823A	Carrying Belt	Include Poly Bag	1
A 5	VJY4033-00A	Head Phone	Include Poly Bag	1
A 6	MTM74-6972A	Line Cord	Include Poly Bag	1
A 7	VGZ0067-001	Rechargeable Battery	Model Name:BN-R121	4
A 8	MTM74-6997A	Home Audio Station Unit	Model Name:AC-RS2	1
A 9	MTM74-6986A	Remote Control Unit	Model Name:RM-RL70	1
A10	MTM74-6973A	Carrying Case	Include Poly Bag	1
A11	VNN916-612	Instructions	For XL-P70 C/J	1
	VNN916-211	Instructions	For XL-P70 B/E/G	1
A12	BT-20047E	Warranty Card	For XL-P70 J/U	1
	BT-20108A	Warranty Card	For XL-P70 J/U	1
A13	BT-20044F	Safety Instructions	For XL-P70 J	1
	BT-20025H	Warranty Card	For XL-P70 C	1
	BT-20071A	SVC Centre Card	For XL-P70 C	1
	BT-20060	Warranty Card	For XL-P70 B	1
	BT-20066A	Warranty Card	For XL-P70 B/G	1
	BT-20114	Warranty Card	For XL-P70 B/G	1
	PU36158	FTZ Information Sheet	For XL-P70 G	1

■ Home Audio Station Unit : MTM74-6997A
/Model name AC-RS2

■ Remote Control Unit : MTM74-6986A
/Model name RM-RL70

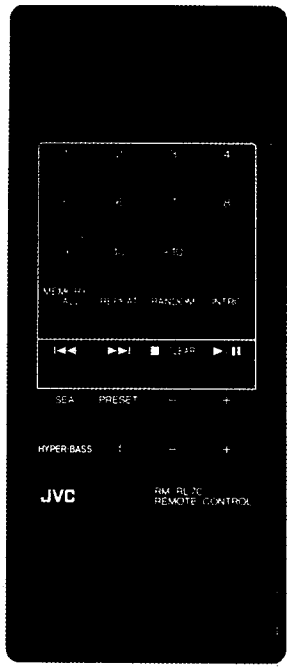

■ AC Adapter : MTM74-6819A(XL-P70J)/Model name AA-905J

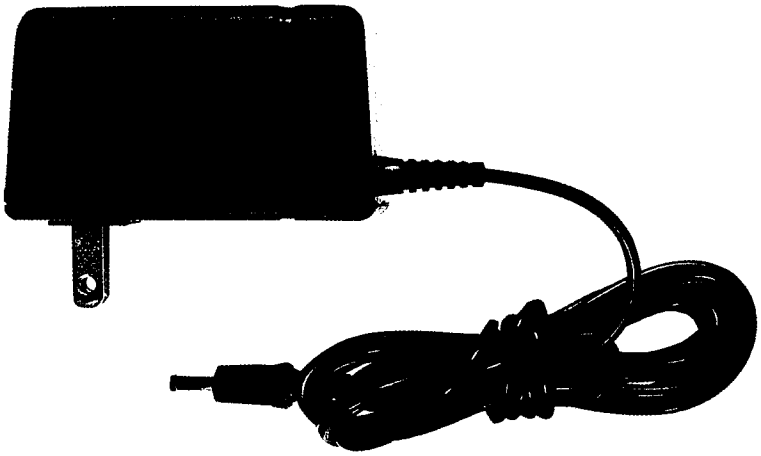

JVC

VICTOR COMPANY OF JAPAN, LIMITED.
AUDIO PRODUCTS DIVISION MAEBASHI PLANT 10-1, 1-chome, Ohwatari-cho, Maebashi-city 371, Japan

Printed
—H0304