SERVICE MANUAL

SANYO

COMPACT DISC PLAYER

CP12
(GENERAL)

CONTENTS

Reference No. WM-19509

SPECIFICATIONS

Audio

channels . . . . . .2 channels
Frequency response. . . .5 - 20,000 Hz
Dynamic range . . . . . .86 dB
Distortion 0.03% (1KHz)
Wow & flutter. . . . . .Undetectable
Outputs. . . . . .LINE OUT: 0.8 V/50K ohms
HEADPHON: 30 mW/32 ohms

Signal format

Sampling frequency. . . .44.1 KHz
Quantization . . . . . .16-bits linear/channel

Pick-up

System . . . . . .Objective drive system light pickup
Light source. . . . . .Semiconductor laser
Wave length . . . . . .790 nm

General

Power requirements . . .Rechargeable battery pack
Battery case
AC adaptor
AC (110V - 240V) - DC 9V
DC IN socket : DC 9V
Power consumption. . . .1.6W (at Rechargeable battery)
4.0W (at AC adaptor)
Dimensions (W x H x D). .(approx.) 125 x 19.8 x 127.5 mm
(5" x 3/4" x 5")
Weight (approx.) . . . . .380 g (14 oz.)

Specifications and design subject to change without notice.

BEFORE DISASSEMBLING AND REPAIRING

a Many ICs and a pickup are used in this compact disc player and these components are very sensitive to static electricity and can break down if exposed to a high static voltage. They must therefore be handled very carefully.
b Since pickup consists of many optical components and other precision components, do not repair it or store it in a hot or humid place, near strong magnetic fields, or in a dusty location.
c When replacing any of the components of a CD player, first switch OFF the player and disconnect the power cord from the player.
d Ground all equipments, measuring instruments, and tools.
e Place an electrically conductive sheet on the work bench and ground it. After removing a pickup from its conductive pouch, do not place it on the pouch. Because it may be damaged due to static electricity.
f Do not directly look at the laser beam emitted from the pickup or aim it at your fingers or skin.

PRECAUTION FOR HANDLING PICKUP

(1) Precautions for transportion and storage
a Store the pickup in its conductive pouch until just before using it.
b Do not apply external pressure or shock to the pick-up.

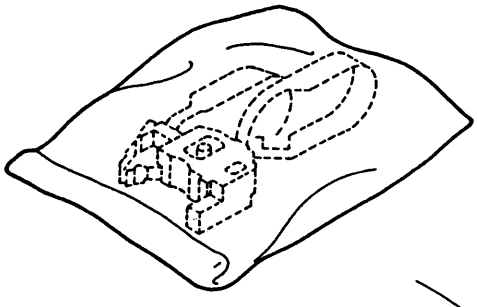

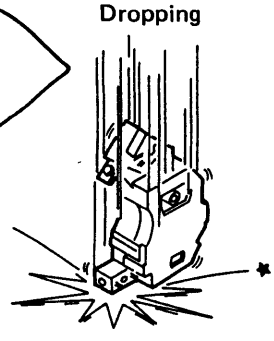

(2) Precautions for handling of the pickup
a Since the pickup has a powerful magnet in itself, do not leave it near a magnetic field.
b When handling the pickup, hold it correcty, and do not apply external pressure or shock to it. If you apply extremely strong pressure or shock to it, it may mulfunction or its printed circuit board may crack.

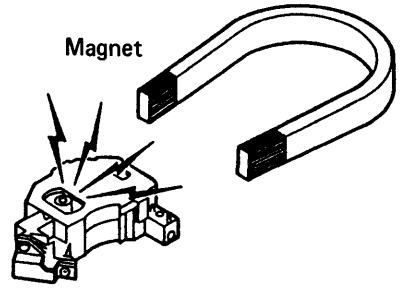

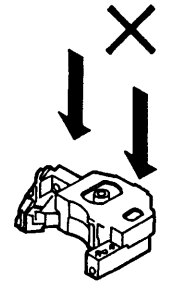

PRECAUTION FOR HANDLING PICKUP

c The pickup is a single component and has been accurately adjusted as such. Do not touch any adjustment point and mounting screws.

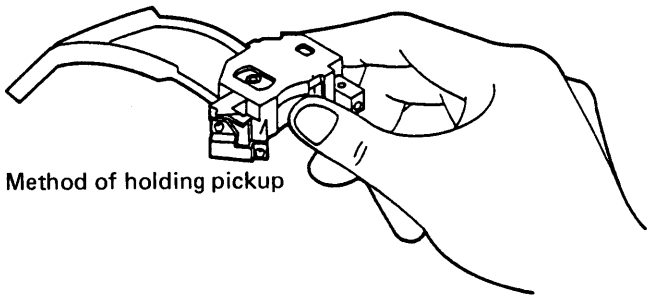

Method of holding pickup

d If the laser beam strikes your eye, it may be damaged. Do not under any circumstances allow the laser beam to strike the eye. Also, do not under any circumstances apply a voltage to a pickup whose laser output section (objective lens, etc.) is damaged.

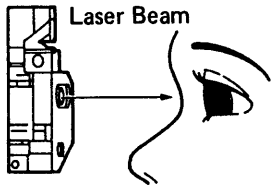

e Cleaning lens surface
If dust gets onto the surface of the lens, blow it away using an air brush. The lens is retained by an extremely delicate support spring. When cleaning the lens surface, therefore, use a soft cotton stick moistend with iso-propyl alcohol and clean the lens very gently, taking care not to bend the support spring. (other liquid may injure the lens) Also, do not use an excessive amount of cleaning fluid otherwise it will flow into the pickup.

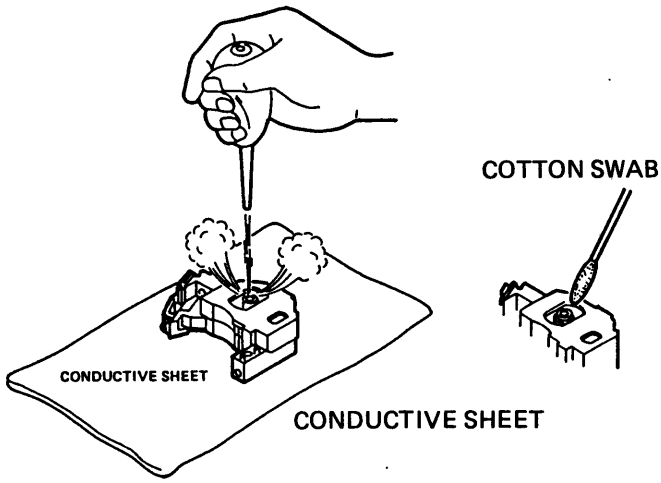

f Do not disassemble the pickup.

DETAILS OF PICK-UP

(I) OPTICAL SYSTEM

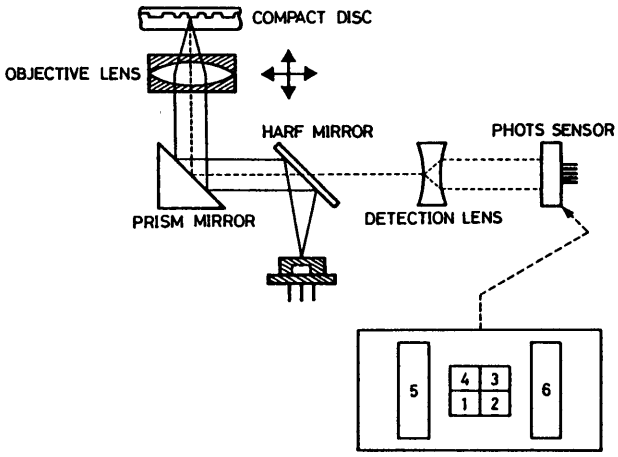

(II) OUTSIDE APPEARANCE

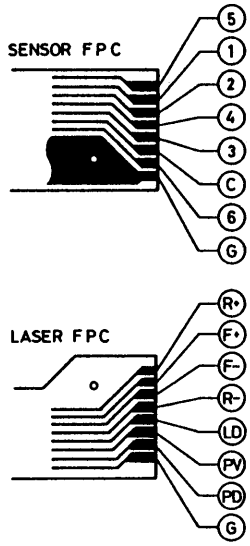

(III) CONNECTION

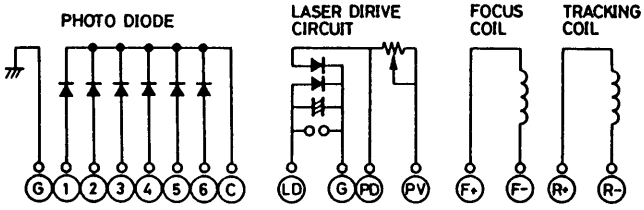

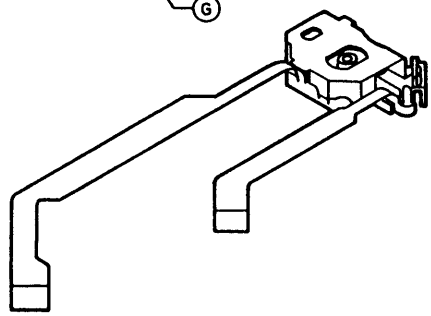

DESCRIPTION OF LASER OPERATION CIRCUIT

(1) Operation circuit

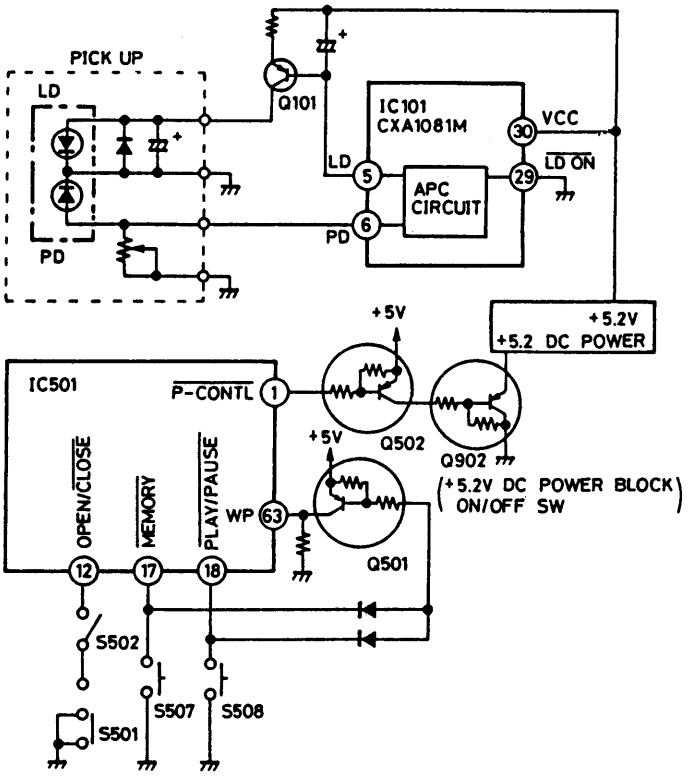

The laser beams are output from the pick-up when all three conditions below are met:

a A compact disc has been installed inside the player.
b The disc cover (top lid) has been closed completely.
c Any of the function buttons (PLAY/STOP, PAUSE, F FWD or F REW) has been pressed.

(2) Description of operation

a When the POWER switch (S501) is set "ON" with the AC adaptor already connected or the battery pack installed and then the top lid is closed, the CLOSE switch (S502) goes "ON" and IC501 pin 12 (OPEN/$\overline{\text{CLOSE}}$) is set from high to low.
b When the PLAY key (S508) or MEMORY key (S507) is pressed in the status established in step (1), IC501 pin 18 ($\overline{\text{PLAY/PAUSE}}$) or pin 17 ($\overline{\text{MEMORY}}$) will be set low for as long as the key is kept depressed.
c The operation in step (2) causes a high signal to enter IC501 pin 63 (WP), and IC501 is released from the hold status and it becomes operational again.
d As a result, IC501 pin 1 ($\overline{\text{P-CONTL}}$) is set from high to low, a high voltage is supplied to Q902, which is the operating switch of the +5.2V DC power block, via Q502 and a +5.2V voltage is output.
e This +5.2V voltage is supplied to pin 30 of IC101 which contains the APC circuit, the APC circuit is activated and the laser beams are output.

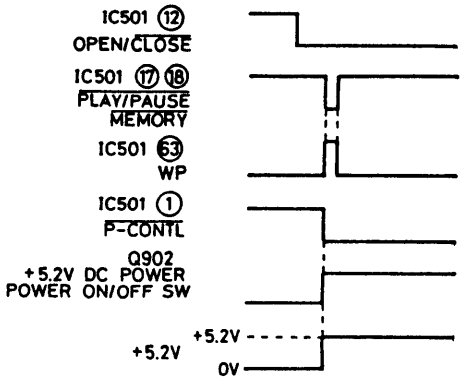

Protection operations

(1) The CLOSE switch (S502) is OFF even if the PLAY or MEMORY key has been pressed with the POWER switch in the "ON" position and with the top lid open. This means that IC501 pin 53 remains high, the +5.2V voltage is not output and the laser beams are not output.
(2) When the top lid has been closed and the PLAY or MEMORY key has been pressed even when a disc has not been installed inside, the laser beams are output but the absence of the disc is detected and the laser beams are cut off several seconds later.
(3) In the unlikely event that the IC501 fails, the laser beams will not enter the user's eyes directly, even if such beams are generated, because they will be blocked by the non-transparent cover.

CAUTION – USE OF CONTROLS OR ADJUSTMENTS OR PERFORMANCE OF PROCEDURES OTHER THAN THOSE SPECIFIED IN THE OPERATING INSTRUCTIONS MAY RESULT IN HAZARDOUS RADIATION EXPOSURE. THE COMPACT DISC PLAYER SHOULD NOT BE ADJUSTED OR REPAIRED BY ANYONE EXCEPT PROPERLY QUALIFIED PERSONNEL.

PRECAUCION – EL EMPLEO DE LOS CONTROLES O LA REALIZACION DE AJUSTES O PROCEDIMIENTOS DE OPERACION DISTINTOS A LOS ESPECIFICADOS EN EL MANUAL DE INSTRUCCIONES PUEDEN OCASIONAR PELIGROSA EXPOSICION A RADIACION.

SOLO PERSONAL DE SERVICIO TECNICO CUALIFICADO DEBERA HACERSE CARGO DE LOS AJUSTES O REPARACIONES DEL TOCADISCOS COMPACTO.

DISASSEMBLY

If there is a compact disc (CD) in the player, remove it.
Disconnect the power plug from the player.
Disassemble the player in the following sequence:

(1) Bottom lid removal

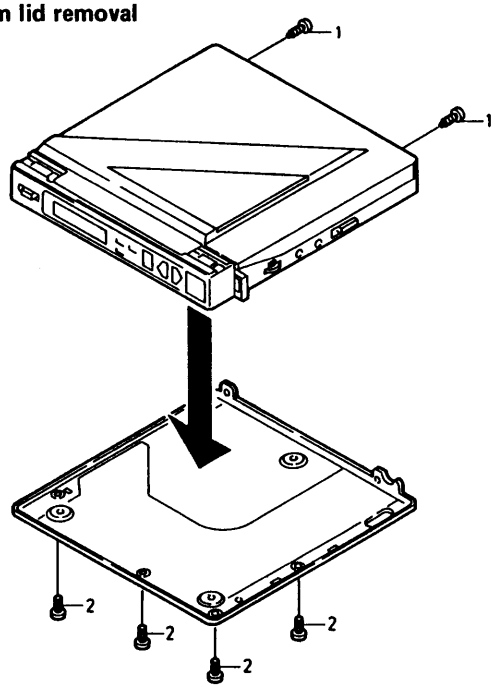

(2) Top lid removal

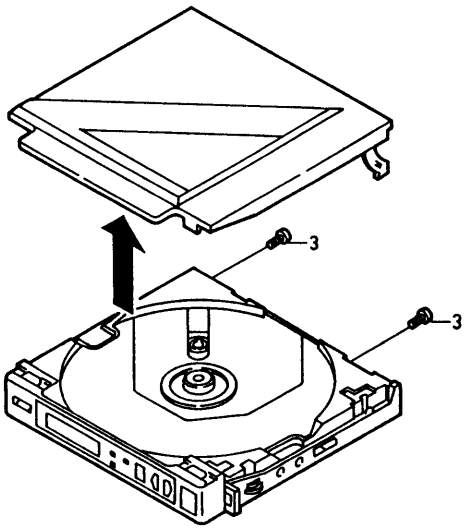

(3) Front panel removal

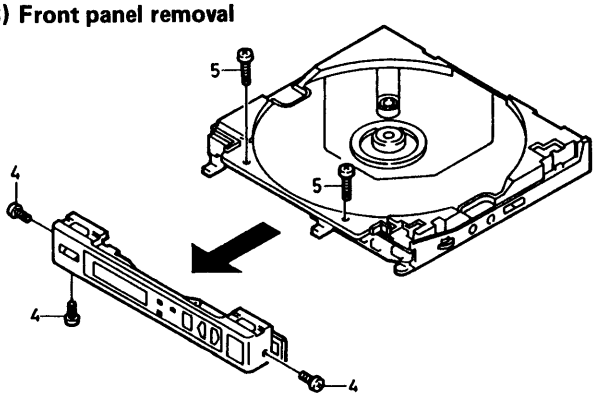

(4) P.C.B removal

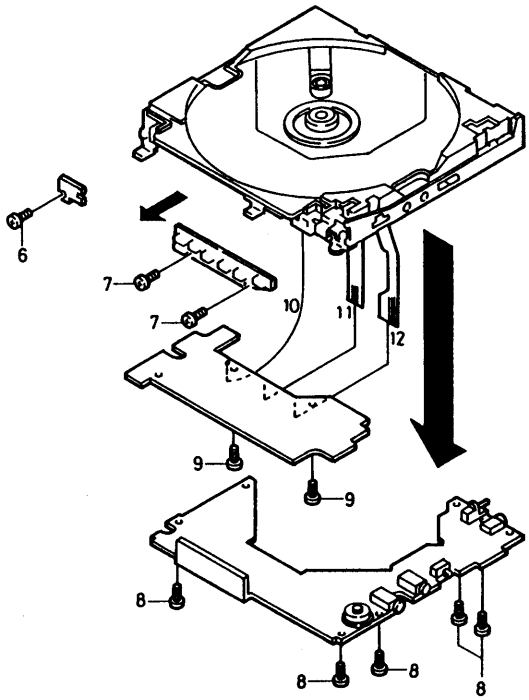

Circuit boord arrengement figure

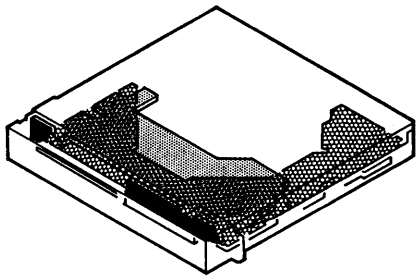

(5) Mechanism removal

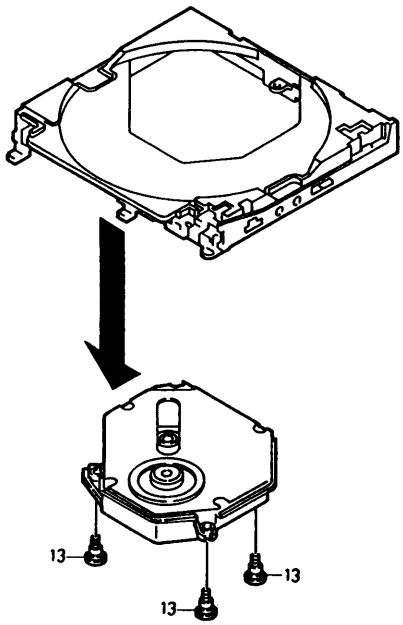

DISASSEMBLY

The compact disc is a very delicate mechanism.
It is very important that the spindle motor (which rotates the disc), the sled motor, the worm gear, etc all operate smoothly and without eccentricity.

(6) Replacement of pick-up

a. Remove the screw (14) and spring plate.
b. Replace the pick-up.

(7) Replacement of sled motor and belt

a. Remove the screw (15) which hold worm gear.
b. Remove the two screw (16) which hold sled motor bracket.
c. Remove the two screw (17) which hold sled motor.
d. Replace the sled motor and belt.

(8) Replacement of turn table and spindle motor

a. Add to heat with 60 W solder about 3 minutes.
b. Insert the tweezers between turn table and pick-up chassis when dissolve the adbesive cement.
c. Remove the turn table to put on equally and not to get tangled the motor shaft.
d. Repair the two washers of 0.8mm thick at chassis when install.
e. Apply the adhesive cement (3M Bond 1375B) to spindle motor shaft.
f. Put in to the turn table at spindle motor shaft till touch the washer. and this time, wipe off the adhesive cement to overflow the Turn table center hole by soft cloth.

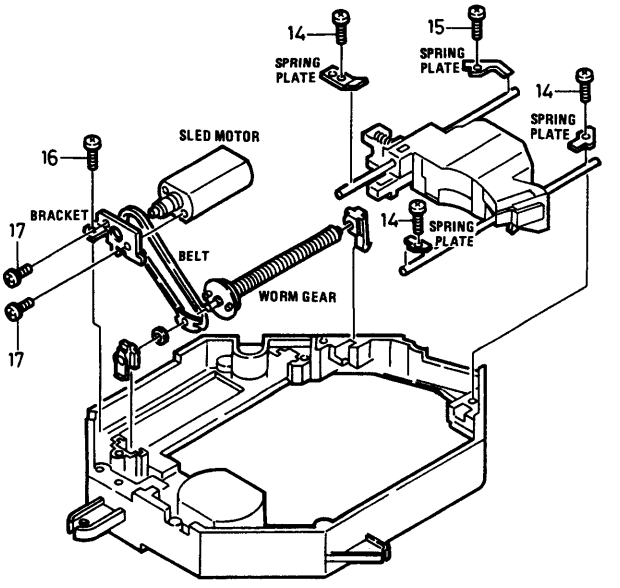

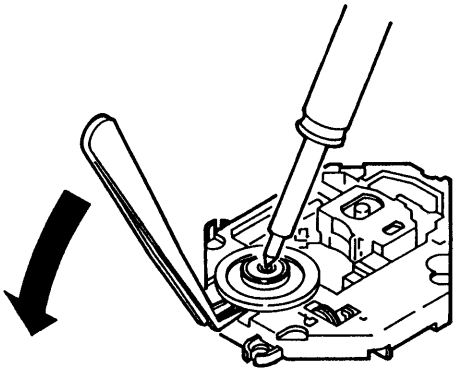

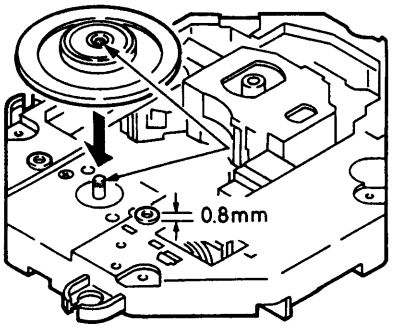

ADJUSTMENTS

The afore-going sections have described the handling of the compact disc player, the points to be borne in mind during repair work, the handling of the pick-up and the disassembly of the player. This section on adjustments must be read through before any attempt to made to conduct the described adjustments.

Compact disc player adjustments

1 PLL VCO free-running adjustment
2 Tracking balance adjustment
3 Focus offset voltage adjustment
} Adjustment made with servicing mode specification
4 Focus gain adjustment
5 Tracking gain adjustment

Test disc required for adjustments

No.	Name	Details (manufacturer)
No.1	YEDS 18	CD player test disc (Sony)

Equipment required for adjustments

Equipment	Model or type (manufacture)
Synchroscope	SS5711 (over 100 MHz, dual trace) (Iwasaki Electric Co.)
Memory scope	DSS6521 (storage oscilloscope) (Kikusui Electronics)
AC digital voltmeter	Digital tester or digital multimeter may be used instead.
DC digital voltmeter	Digital tester or digital may be used instead.
Low-frequency generator	AF oscillator
Band-pass filter	Band-pass filter (see accompanying figure)
Frequency counter	Digital counter

Notes:

a. The adjustments can be made using the equipment produced by other manufactuers provided that the performance of that equipment corresponds to that of the above-listed models.
b. Use a 10 : 1 probe for observing signals on the oscilloscope and memory scope.
c. Connect the oscilloscope ground to TP6 (VC).

Servicing mode

When the $\overline{RST}$ signal is supplied after the power supply has been connected, this program first selects the servicing program routine or ordinary routine. When the servicing program routine is entered, the microprocessor summons the required jobs from among the various subroutines in accordance with the key input, and it executes the jobs. Operational checks can be carried out efficiently using this routine.

1 Setting up the servicing mode

(1) Set the POWER switch to ON with the external power supply disconnected (with no power being supplied to the unit) and press the PLAY/PAUSE (▶/II) button or the MEMORY button.
* This step is undertaken for discharging C903 which is connected to microprocessor (IC501) pin 62 (RST).
(2) Connect the GND terminal and TP23 (SERVICING MODE BATTE) pin with a solderd jumper or switch.
(3) Connect the external power supply while the PLAY/PAUSE (▶/II) button is pressed.

These steps switch the unit over to the servicing mode.

2 Operations in the servicing mode

(1) The following display appers on the LCD when the servicing mode has been set: [- _ PROG LOCK]

(2) Operation is released by pressing the stop button (■) during any of the operations.

(3) When the play/pause button (▶/II) is pressed, the focus, tracking, sled and spindle motors as well as the various servo circurts are forcibly turned "ON." This operation is for inspecting the PCBs (complete) and it should not be used for the completion stage adjustments or repair.

(4) When the fast forward skip button (▶▶I) or the fast reverse skip button (I◀◀) is pressed, the pick-up will be moved to the outer or inner edge of the disc. This operation is performed in order to inspect the operation of the thread motor.

(5) The focus search operation is commenced when the MEMORY button is pressed. If a disc has been installed inside the unit, the focus servo will be turned "ON." If, however, a disc has not been installed, a focus search operation will be conducted every time the button is pressed. At this time, the spindle motor operates with CLV–S servo and it turns slowly.

(6) When the REPEAT button is pressed with the focus servo "ON" in step (5), the tracking servo, thread servo and CLV–A (servo for disc PLAY) are all turned "ON." This establishes the play mode.

3 Releasing the servicing mode

To release the mode, the soldered jumper at TP23, which is connected when the servicing mode is set, is detached, and this step is always taken with the external power supply disconnected.

1. PLL VCO free-running adjustment (SVR203)

Test disc	No.1
Measuring device	Frequency counter
Connection point	TP17 (PLL–VCO OUTPUT)
Adjustment location	SVR203
Adjustment value	4.32MHz +/–0.01MHz

a Connect TP16 (ASY) to ground and connect the frequency counter to TP17 (PLCK).

b Connect TP23 to ground (GND) and set operation to the servicing mode.

c Adjust SVR203 to achieve a value of 4.32MHz +/–0.01 MHz on the frequency counter.

d Upon completion of the adjustment, disconnect the connection made between TP16 (ASY) and ground.

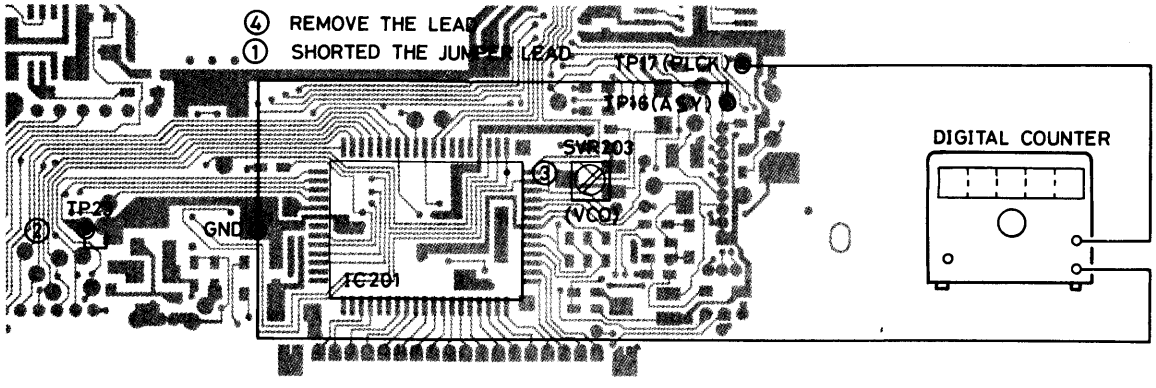

2. Tracking balance adjustment (SVR101)

Test disc	No.1
Measuring device	Oscilloscope
Connection point	TP8 (TE–SIGNAL) TP6 (GND)
Adjustment location	SVR101
Adjustment value	A=B symmetrical waveforms

a Set operation to the servicing mode.

b After having installed the test disc, press the MEMORY switch. This will cause the disc to rotate and the focus servo be turned "ON."

Note:

When the pick-up is positioned at the innermost circumference of the disc, the function keys should be operated to move it slightly toward the outer circumference in order to play the TOC (zero pattern) portion of the disc.

c Measure the tracking error signal (TP8) on the oscilloscope and adjustment SVR101 so that the waveforms are made symmetrical at the top and bottom with respect to 0V, as shown in Fig.1.

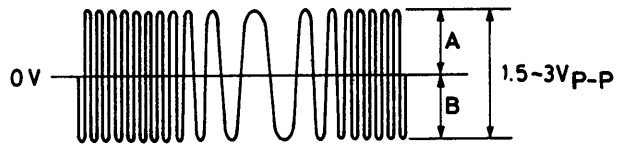

Fig. 1

3. Focus offset adjustment (SVR102)

Test disc	No.1
Measuring device	Oscilloscope
Connection point	TP7 (FE–SIGNAL) TP1 (RF–SIGNAL) TP6 (GND)
Adjustment location	SVR102
Adjustment value	Same value for both PLAY and STOP mode voltages

a Connect the oscilloscope to TP2 (FE signal).
b Connect the oscilloscope to TP1 (RF signal).
c Perform steps (1) and (2) of the tracking balance adjustment and set the focus servo "ON."
d Next, the tracking servo is turned "ON" and the play mode is established by prssing the REPEAT switch.
e Now measure the DC offset voltage of the TP7 (focus error signal) waveform and make a note of it.
f Next, press the STOP switch to set the unit to the stop mode and then take out the disc.
g Now adjust SVR102 to attain the same value for the DC offset voltage at TP7 as in step (5).
h Install the test disc again, repeat steps (3) and (4), and set the unit to the play mode.
(MEMORY key "ON" ⟶ REPEAT key "ON")
i Now check that area "a" of the TP1 (RF signal) waveform on the oscilloscope is configured as a straight line and that the openings at area "b" (mesh pattern) have expanded (see Fig. 2). Also check that the peak value is at its maximum.

Notes:

Perform this adjustment with the unit held either horizontally or perpendicularly. If it is held perpendicularly, however, the focus alignment and the offset voltage will still be present in the STOP mode, and so the disc should be removed and then the SVR adjustment made.

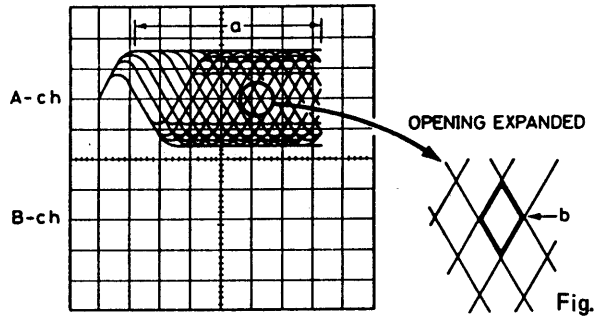

Fig. 2

4. Focus gain adjustment (SVR201)

Test disc	No.1
Measuring device	Oscilloscope Memory scope Low-frequency oscillator Band-pass filter
Connection point	TP7 (FE–SIGNAL) TP6 (VC)
Adjustment location	SVR201
Adjustment value	400mVp-p

a Play test disc No.1
b Set the output of the low-frequency oscillator to 400Hz/1Vp-p (350mVrms).
c Connect the low-frequency oscillator to TP13 (pin 6 of IC201) through a 100KΩ RESISTOR
d Connect the band-pass filter to TP7 (focus error signal) and observe its output on the oscilloscope or memory scope.
e Adjust SVR201 so that the output waveform of the band-pass filter is set to 400mVp-p on the memory scope.

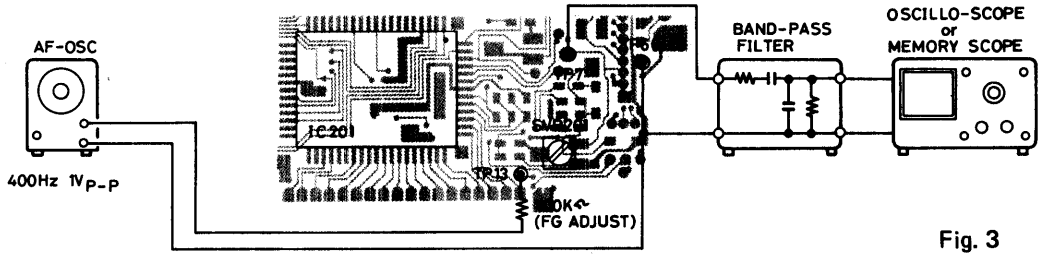

Fig. 3

ADJUSTMENTS

5. Tracking gain adjustment (SVR202)

Test disc	No.1
Measuring device	Oscilloscope Memory scope Low-frequency oscillator Band-pass filter
Connection point	TP8 (TE–SIGNAL) TP6 (VC)
Adjustment location	SVR202
Adjustment value	300mVp-p

a Play test disc No.1.
b Set the output of the low-frequency oscillator to 400Hz/1Vp-p (350mVrms).
c Connect the low-frequency oscillator to TP14 (pin 12 of IC201) through a 820kΩ resistance.
d Connect the band-pass filter to TP8 (tracking error signal) and observe its output on the oscilloscope or memory scope.
e Adjustment SVR202 so that the output waveform of the band-pass filter is set to 300mVp-p on the memory scope.

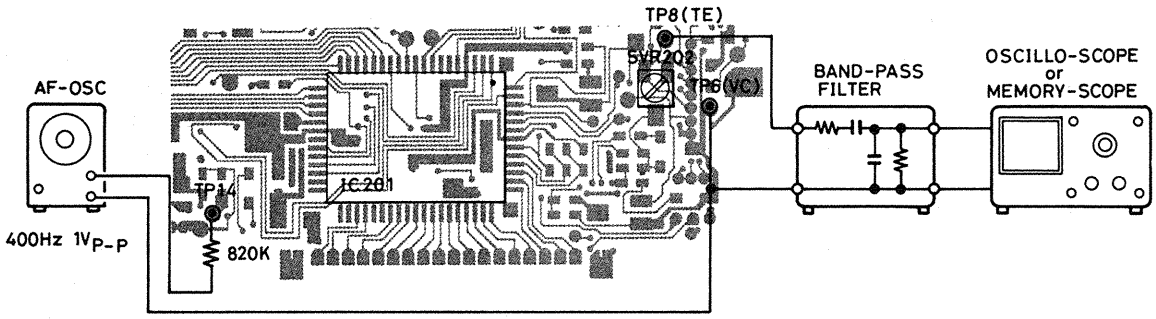

NORMAL WAVE FROM OF TEST POINT

① TP1(RF) MODE:PLAY GND:TP6(VC)
V:200mV/div(AC) H:500n.sec/div

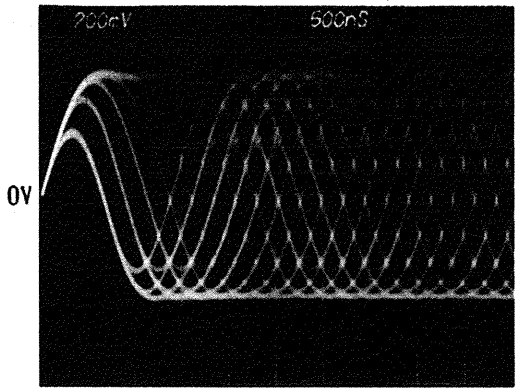

② TP15(EFM) MODE:PLAY GND:TP30(GND)
V:1V/div H:500n.sec/div

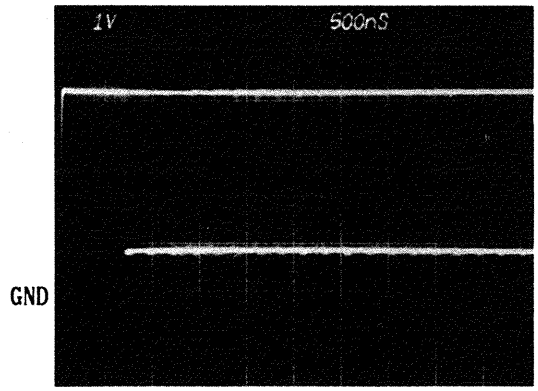

③ TP2;7(FE),TP3;8(TE) MODE:PLAY
GND:TP6(VC)
V1:200mV/div,V2:500mV/div H:5m.sec/div

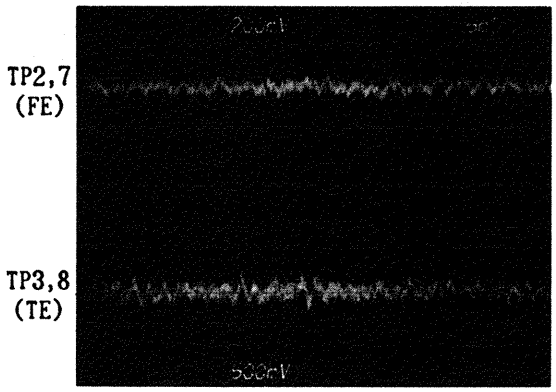

④ TP9(FEO),TP10(TAO) MODE:PLAY
GND:TP6(VC)
V1,V2:500mV/div H:5m.sec/div

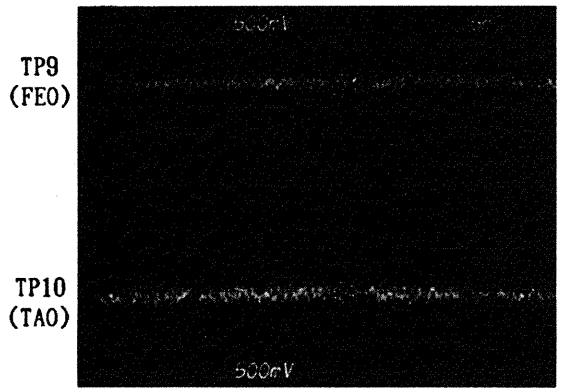

NORMAL WAVE FROM OF TEST POINT

⑤ TP1,TP10,TP3;8,TP11 MODE:FWD SKIP
GND:TP6(VC) (100TrJ)
V1,2,3:1V/div H:5■.sec/div
V4:2V/div H:5■.sec/div

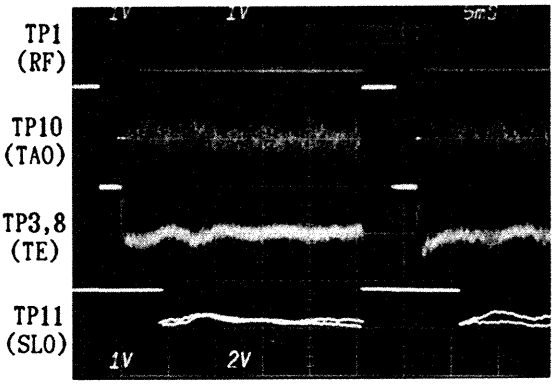

⑥ TP1,TP10,TP3;8,TP11 MODE:BACK SKIP
GND:TP6(VC) (100TrJ)
V1,2,3:1V/div H:5■.sec/div
V4:2V/div H:5■.sec/div

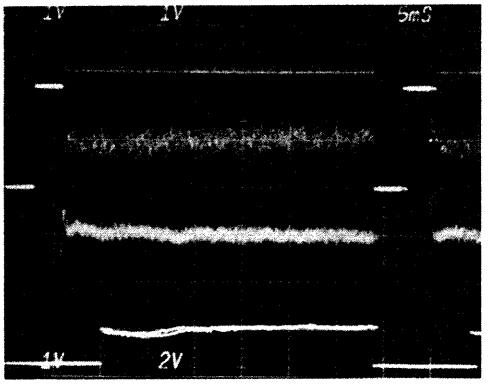

⑦ TP1,TP10,TP3;8,TP11 MODE:FWD SEARCH
GND:TP6(VC) (PAUSE,10TrJ)
V1,2,3,4:1V/div H:2■.sec/div

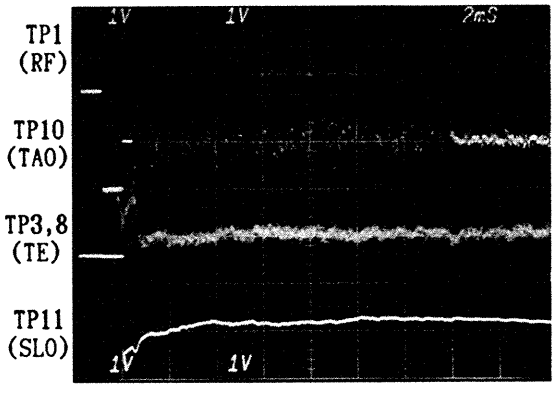

⑧ TP1,TP10,TP3;8,TP11 MODE:BACK SEARCH
GND:TP6(VC) (PAUSE,10TrJ)
V1,2,3,4:1V/div H:2■.sec/div

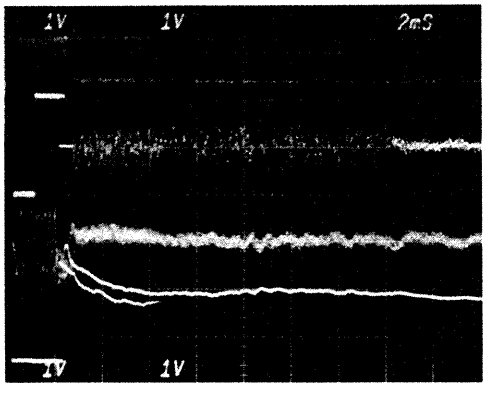

⑨ TP1,TP10,TP3;8,TP11 MODE:FWD SEARCH
GND:TP6(VC) (PLAY)
V1,2,3,4:1V/div H:1■.sec/div

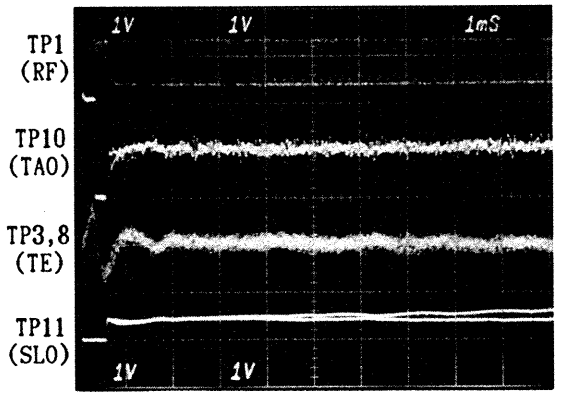

⑩ TP1,TP10,TP3,8,TP11 MODE:BACK SEARCH
GND:TP6(VC) (PLAY)
V1,2,3,4:1V/div H:2■.sec/div

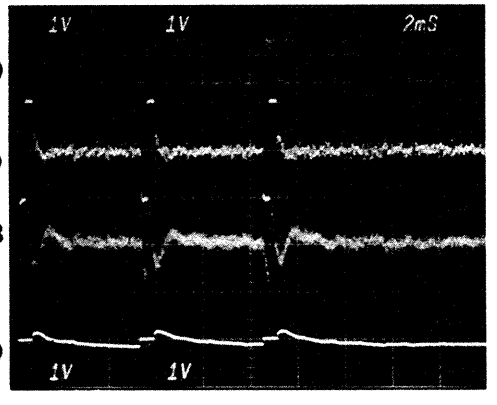

NORMAL WAVE FROM OF TEST POINT

⑪ DAC(IC601)OUT,LINEOUT(TP27,28)
MODE:PLAY(1KHz,0dB) GND:TP30(GND)
V1,2:1V/div H:200μ.sec/div

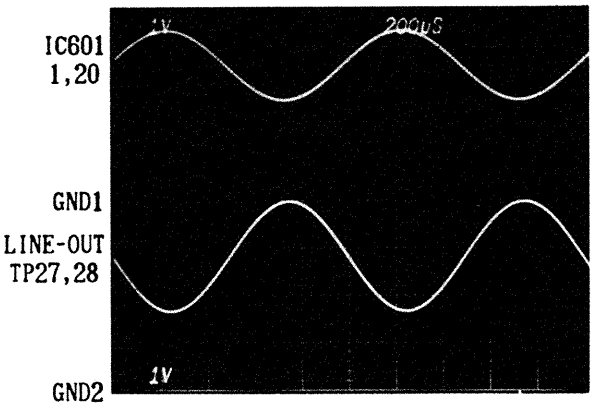

⑫ IC401-53,54 MODE:PLAY GND:TP30(GND)
V1,2:2V/div H:100n.sec/div

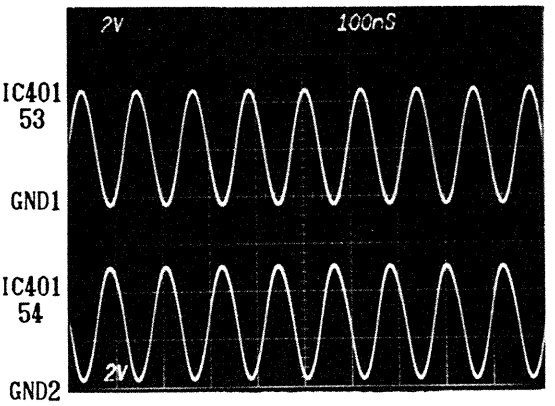

⑬ IC501-60,61 MODE:PLAY GND:TP30(GND)
V1,2:2V/div H:100n.sec/div

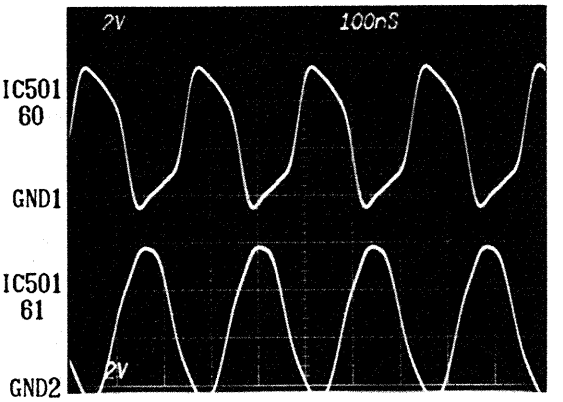

⑭ TP17(PLCK) MODE:PLAY GND:TP30(GND)
V:2V/div H:100n.sec/div

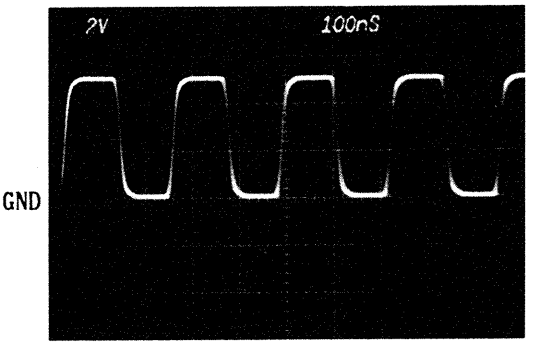

SANYO

Correction Notice

Please add this notice to the Service Manuals listed below.

Category **PORTABLE CD PLAYER** Date: Jan. 1988

Model : **CP 12**

Destination: U.K. REF: WM-20488 Issue Number 1

The following item were misprinted. Please make the necessary rivisions as indicated in the Service Manual listed above.

Page & Section	Ref. No.		Part No.	Description	Remarks
Page 24 ACCESSORIES	A12	Old	4-660T-00200	LEAD BATTERY, BATTERY CELL	* Not Service Parts
		New	N.S.P	LEAD BATTERY, BATTERY CELL	

NOTE: The lead battery is not able to supply in the state of unity because it was safety problem.

Please order to be assembled part. (A1; HOLDER BATTERY ASSY ---- 141-0-331T-06300)

A11400
Printed in Japan Jan./'88/1500 NS

SANYO Electric Co., Ltd.
Osaka Japan

REFERENCE NO. WM-22090N

TEST POINT & PARTS LOCATION

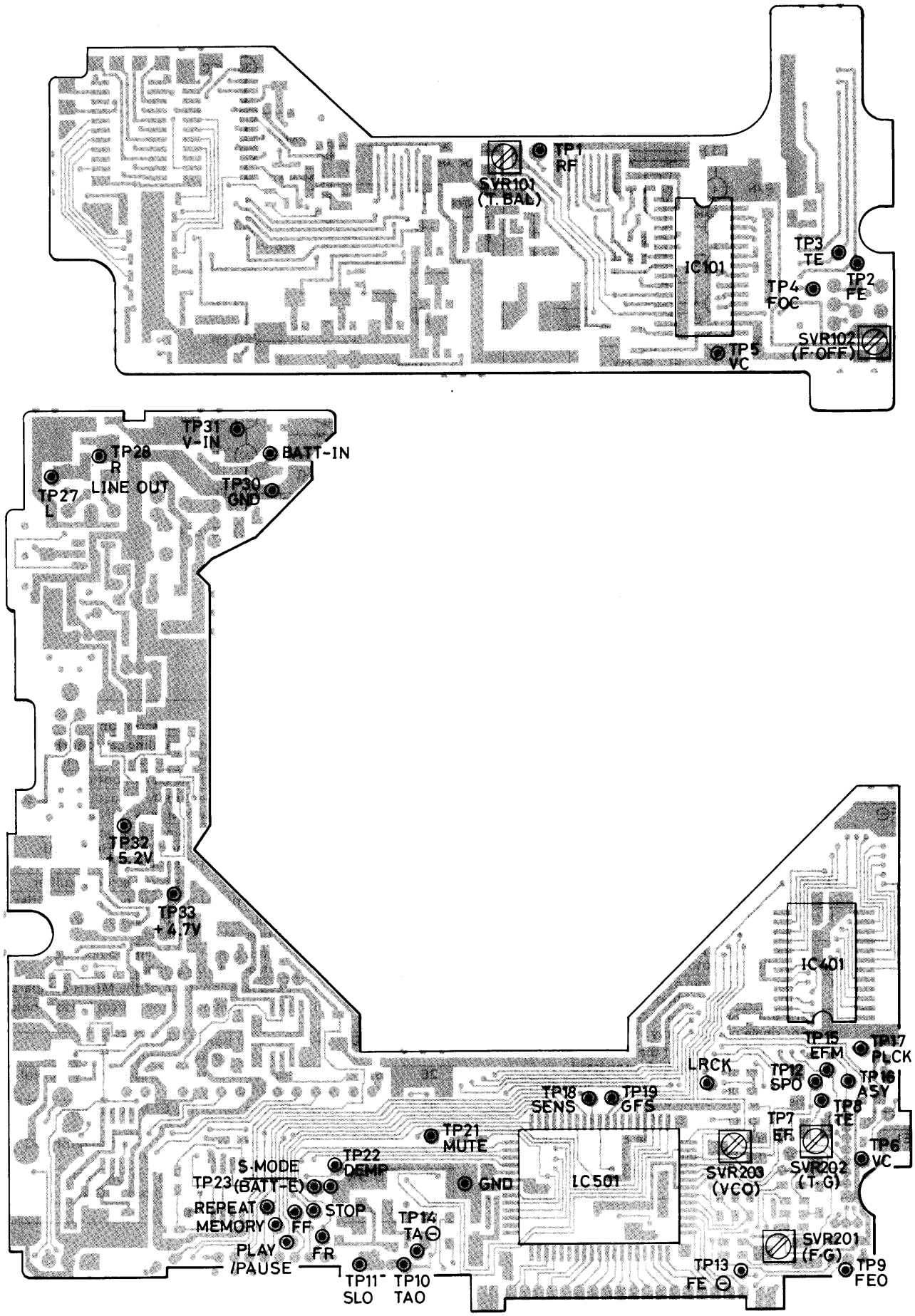

IC BLOCK DIAGRAM

IC101 CXA1081M (RF Amplifier for CD Player)

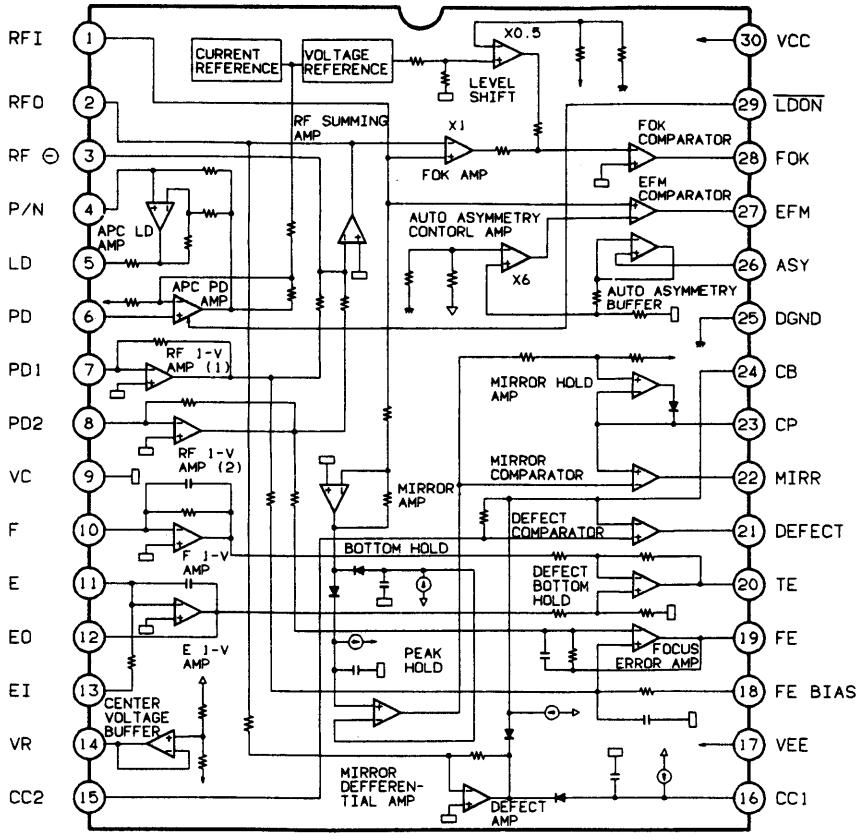

Pins Functions of IC101 (CXA1081M) ····· VCC = 2.5V, VEE = DGND = –2.5V, VC = GND

Pin No.	Pin name (Symbol)	I/O	Description
1	RFI	I	Input pin with coupling capacitor where the RF summing amplifier output is connected.
2	RFO	O	Output pin of RF summing amplifier and check point of the eye pattern.
3	RF⊖	I	Feedback input pin of the RF summing amplifier.
4	P/N	I	Switching pin of the LD P-sub/N-sub. (DC voltage: At N-sub)
5	LD	O	Output pin of the APC LD amplifier. DC voltage: At N-sub and pin 6 open.
6	PD	I	Input pin of the APC PD amplifier. (DC voltage: Open)
7	PD1	I	Inversion input pin of the RF I-V amplifier (1); with the pin photo diode of A and C connected.
8	PD2	I	Inversion input pin of the RF I-V amplifier (2); with the pin photo diode of B and D connected.
9	VC	–	For split power supply: GND For single power supply: VR (pin 14)
10	F	I	Inversion input pin of the F I-V amplifier; with the pin photo diode of F connected.
11	E	I	Inversion input pin of the E I-V amplifier; with the pin photo diode of E connected.
12	EO	O	Output pin of the E I-V amplifier.
13	EI	I	Feedback input pin of the E I-V amplifier. For gain adjustment of the E I-V amplifier.
14	VR	O	Output pin of (VCC + VEE)/2 DC voltage

Pin No.	Pin name (Symbol)	I/O	Description
15	CC2	I	Input pin (with coupling capacitor) where the Defect bottom-hold output is connecting.
16	CC1	O	Output pin of the Defect bottom hold.
17	VEE	–	For split power supply: Negative power supply. For single power supply: GND
18	FE BIAS	I	Feedback input pin of the focus error amplifier. For CMR (Common Mode Rejection) adjustment of the focus error amplifier.
19	FE	O	Output pin of the focus error amplifier.
20	TE	O	Output pin of the tracking error amplifier.
21	DEFECT	O	Output pin of the defect comparator (DC voltage: at 10 kΩ load).
22	MIRR	O	Output pin of the MIRR comparator (DC voltage: at 10 kΩ load).
23	CP	I	Feedback input pin of the MIRR comparator.
24	CB	I	Connection pin of the Defect bottom-hold capacitor.
25	DGND	–	For split power supply: GND For single power supply: GND (VEE).
26	ASY	I	Input pin of the auto asymmetry control amplifier.
27	EFM	O	Output pin of the EFM comparator (DC voltage: at 10 kΩ load).
28	FOK	O	Output pin of the FOK comparator (DC voltage: at 10 kΩ load).
29	$\overline{\text{LD ON}}$	I	Switching pin of the LD ON/OFF. (DC voltage: For LD on) (DGND)
30	VCC	–	Positive power supply.

IC BLOCK DIAGRAM

IC201 CXA1082AQ (Servo Signal Processor for CD Player)

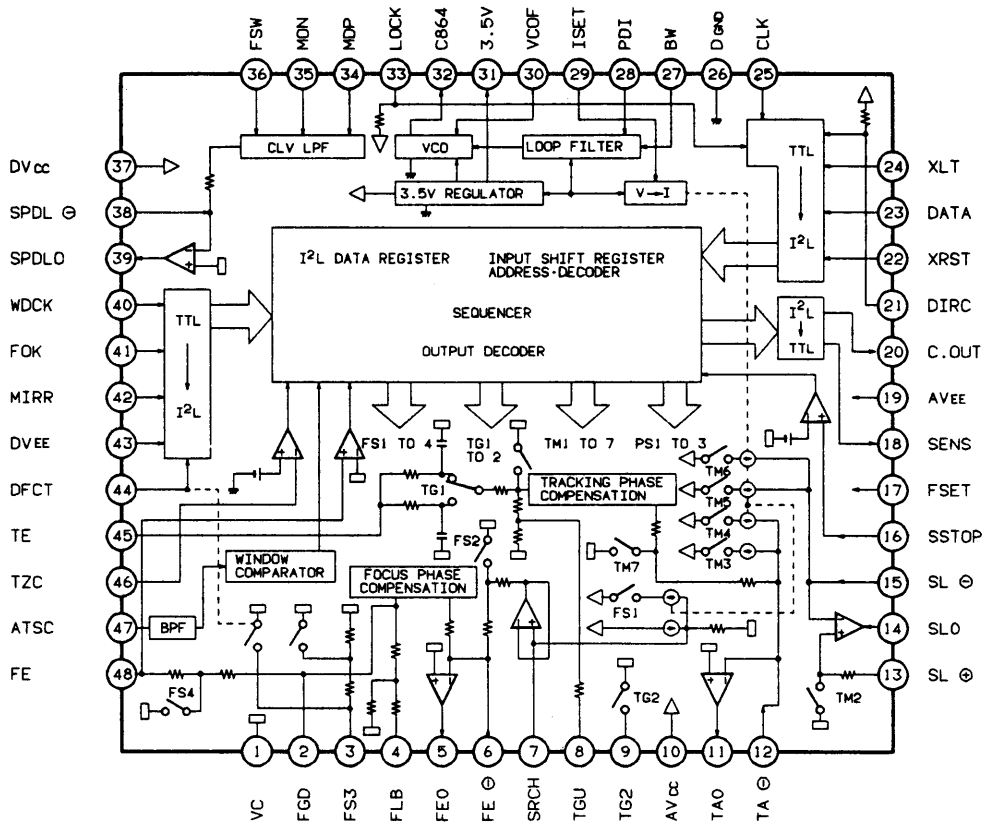

Pins Functions of IC201 (CXA1082AQ)

Pin No.	Pin name (Symbol)	Description
2	FGD	Connect a capacitor between this pin and pin 3 to reduce the high-frequency gain.
3	FS3	The high-frequency gain of the focus servo can be changed by switching FS3 ON or OFF.
4	FLB	Time constant external pin for rising low band-width of the focus servo.
5	FEO	OP amplifier output pins for the power Transister driver.
6	FE⊖	Reverse input pin for the focus amplifier.
7	SRCH	Pin for providing a time constant to generate the focus search waveform.
8	TGU	Pin for providing a time constant to switch the tracking gain of high-frequency.
9	TG2	Pin for providing a time constant to change the high-frequency tracking gain.
11	TAO	OP amplifier output pins for the power Transister driver.
12	TA⊖	Reverse input pin for the tracking amplifier.
13	SL⊕	Non-reverse input pin for the sled amplifier.
14	SLO	OP amplifier output pins for the power Transister driver.
15	SL⊖	Reverse input pin for the sled amplifier.
16	SSTOP	Pin for detecting a signal for the ON/OFF limit switch of the innermost part of the disc.
17	FSET	Pin for setting the peak frequency of the focus, tracking phase compensation and f0 of the CLV LPF.
18	SENS	Output pins for interfacing with the micro-computer.
20	C.OUT	Output pins for interfacing with the micro-computer.
21	DIRCT	Input pins for interfacing with the microcomputer.
22	XRST	Input pins for interfacing with the microcomputer.

Pin No.	Pin name (Symbol)	Description
23	DATA	Input pins for interfacing with the microcomputer.
24	XLT	Input pins for interfacing with the microcomputer.
25	CLK	Input pins for interfacing with the microcomputer.
27	BW	Pin for providing a time constant for the loop filter.
28	PDI	Input pin for the CX23035/CXD1130 phase comparator output PDO.
29	ISET	Current is input, determining the peaks of focus search, track jump, and sled kick.
30	VCOF	The free-running frequency of VCO is almost proportional to the resistance Value between this pin and pin 31.
32	C864	Output pin of 8.64 MHz VCO.
33	LOCK	Input pins for interfacing with the microcomputer.
34	MDP	Pin for connecting the CX23035/CXD1130 MDP pin.
35	MON	Pin for connecting the CX23035/CXD1130 MON pin.
36	FSW	Pin for providing an external LPF time constant of the CLV servo error signal.
38	SPDL⊖	Reverse input pin for the spindle drive amplifier.
39	SPDLO	OP amplifier output pins for the power Transister driver.
40	WDCK	Input pins for interfacing with the microcomputer.
41	FOK	Input pins for interfacing with the microcomputer.
42	MIRR	Input pins for interfacing with the microcomputer.
44	DFCT	Input pins for interfacing with the microcomputer.
45	TE	Input pin for tracking error signals.
46	TZC	Input pin for the zero-cross tracking comparator.
47	ATSC	Input pin of the window comparator for ATSC detection.
48	FE	Input pin for focus error signals.

IC BLOCK DIAGRAM

IC301, 302 BA6280AF (Pulse Width Modulation Driver for Actuator and Motor)

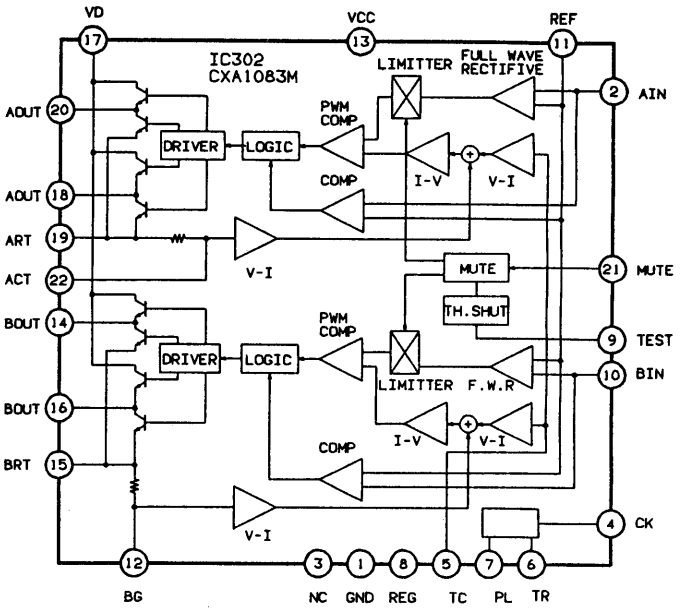

Pins Functions

Pin No.	Pin name (Symbol)	Description
1	GND	Ground pin.
2	A-IN	Servo signal input pin. This pin makes up a differential circuit in combination with pin 11 .
3	NC	
4	CLOCK	Clock input pin. Input to the F.F. circuit, provides the electric discharge pulse of the saw-tooth-wave oscillator.
5	TC	Saw-tooth-wave output pin.
6	TR	Connect an external register (R) to this pin. The resistance value determines the charge current ramp ratio of pin 5 . I = 1/4 Vcc ÷ R
7	FL	Connect an external capacitor to this pin for the reduction of saw-tooth-wave ripples.
8	REG	Connect an external capacitor to this pin. Ripples in the internal regulator can be reduced.
9	TEST	Thermal shutdown test pin. Output is stopped when this pin goes "high". This pin is normally open.
10	B-IN	Servo signal input pin. This pin makes up a differential circuit in combination with pin 11 .
11	REF	Input reference voltage for the differential circuits with A-IN (pin 2) and B-IN (pin 10).
12	B-CT	Current feedback filter pin.
13	Vcc	Power supply pin.
14	B-OUT (+)	Output pin.
15	B-RT	Current sensing pin.
16	B-OUT (−)	Output pin.
17	VD	Output power supply pin.
18	A-OUT (+)	Output pin.
19	A-RT	Current sensing pin.
20	A-OUT (−)	Output pin.
21	MUTE	Muting voltage pin. Pulse width modulation index is controlled in accordance with the voltage input to this pin. If this function is not needed, connect the pin to Vcc (pin 13).
22	A-CT	Current feedback filter pin.

IC401 CXD1130Q (Digital Signal Processor of CD)

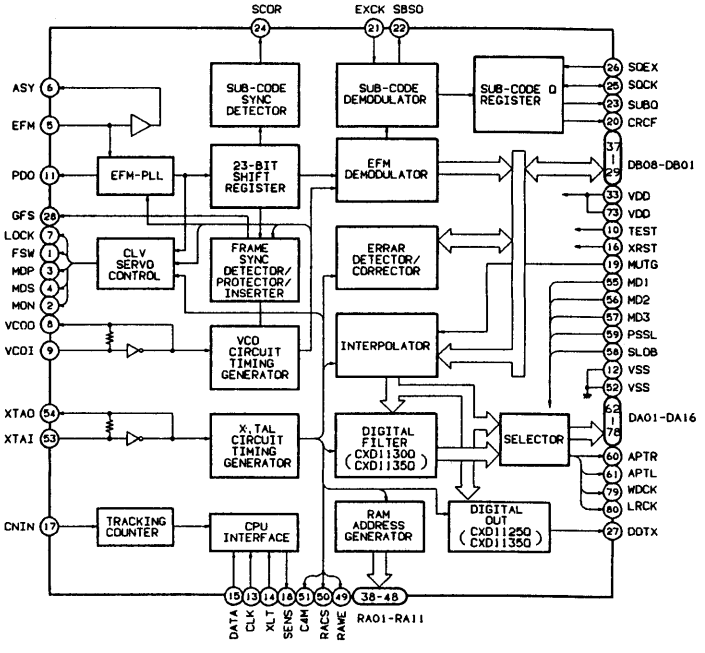

Note:

C1F1·C1F2:	Monitor output reporting status of error correction for C1 decoder.
C2F1·C2F2:	Monitor output reporting status of error correction for C1 decoder.
C2FL:	Output of status condition. C2FL is set "H" when the C2 sequence presently being corrected becomes impossible to correct.
C2PO:	Display output of the C2 pointer. It is synchronized with the audio data output.
RFCK:	Read frame clock output. 7.35 kHz of the crystal system.
WFCK:	Write frame clock output. 7.35 kHz when locked by the crystal system.
$\overline{\text{PLCK}}$:	Output VCO/2. f = 4.3218 MHz when locked by the EFM signal.
UGFS:	Output for unprotected frame sync patterns.
GTOP:	Output for display of status of frame sync protection.
RAOV:	Output for display of either RAM overflow or underflow for ±4 frame jitter absorption.
C4LR:	Strobe signal. 352.8 kHz when DF is on, 176.4 kHz when DF is off, or when the LS1 is CXD1125Q.
$\overline{\text{C21O}}$:	Inverse output of C21O.
C21O:	Bit clock output. 4.2336 MHz when DF is on, 2.1168 MHz when DF is off, or when the LS1 is CXD1125Q.
DATA:	Serial data output of audio signal.

IC BLOCK DIAGRAM

Pins Functions of IC401 (CXD1130Q)

Pin No.	Pin name (Symbol)	I/O	Description
1	FSW	O	Pin 1 output is switched constant when output filter of the spindle motor is energized.
2	MON	O	ON/OFF control for spindle motor.
3	MDP	O	Spindle motor drive. Provides rough control during CLV-S mode and phase control during CLV-P mode.
4	MDS	O	Spindle motor drive. Controls speed during CLV-P mode.
5	EFM	I	EFM signal from RF amplifier.
6	ASY	O	Controls slice level of the EFM signal. The output of pin 7 reflects the status of the GFS signal which is sampled at WFCK/16.
7	LOCK	O	When the GFS signal is "H", the output of pin 7 is also "H", but, when the signal has remained "L" for at least 8 samples, the output of pin 7 is "L".
8	VCOO	O	VCO output. The frequency is f = 8.6436 MHz, when locked by the WFCK signal.
9	VCO1	I	VCO input.
10	TEST	I	(OV)
11	PDO	O	The output of pin 11 provides phase comparison of EFM signal and VCO/2.
12	VSS	–	GND (OV)
13	CLK	I	Pin 13 provides serial tramsmission clock from the CPU. Data is latched on the leading edge of the clock.
14	XLT	I	Pin 14 provides latch input from the CPU. 8-bit shift register data (serial data received from the CPU) is latched in each of the registers.
15	DATA	I	Serial data from the CPU.
16	XRST	I	System reset ("L").
17	CNIN	I	Tracking pulse input.
18	SENS	O	Output reflecting internal condition as designated by address.
19	MUTG	I	Muting input. MUTG is "L" when ATTM of internal register A is "L" (normal condition). MUTG is "H" when muting condition is set.
20	CRCF	O	Output the results CRC check of subcode Q.
21	EXCK	I	Clock input for subcode serial output.
22	SBSO	O	Serial output of subcode.
23	SUBQ	O	Output of subcode Q.
24	SCOR	O	Output of subcode sync S0+S1.
25	SQCK	I/O	Clock for reading subcode Q.
26	SQEX	I	Input for selecting SQCK.
27	DOTX	O	Digital output ($\overline{\text{WFCK}}$ is output when DO is off or for the CXD1130Q.)
28	GFS	O	Display output for frame sync lock status.
29	DB08	I/O	Data pin for external RAM. DATA8 (MSB)
30	DB07	I/O	Data pin for external RAM. DATA7
31	DB06	I/O	Data pin for external RAM. DATA6
32	DB05	I/O	Data pin for external RAM. DATA5
33	VDD	–	Power supply (+5V)
34	DB04	I/O	Data pin for external RAM. DATA4
35	DB03	I/O	Data pin for external RAM. DATA3
36	DB02	I/O	Data pin for external RAM. DATA2
37	DB01	I/O	Data pin for external RAM. DATA1 (LSB)
38	RA01	O	Output address of external RAM. ADDR01 (LSB)
39	RA02	O	Output address of external RAM. ADDR02
40	RA03	O	Output address of external RAM. ADDR03
41	RA04	O	Output address of external RAM. ADDR04
42	RA05	O	Output address of external RAM. ADDR05
43	RA06	O	Output address of external RAM. ADDR06
44	RA07	O	Output address of external RAM. ADDR07
45	RA08	O	Output address of external RAM. ADDR08
46	RA09	O	Output address of external RAM. ADDR09
47	RA10	O	Output address of external RAM. ADDR10
48	RA11	O	Output address of external RAM. ADDR11 (MSB)
49	RAWE	O	Write enable output signal to external RAM. (Active when "L".)
50	RACS	O	Chip select output signal to external RAM. (Active when "L".)
51	C4M	O	Divider output for crystal. f = 4.2336 MHz
52	VSS	–	GND (OV)
53	XTAI	I	Input to crystal oscillator circuit. Depending on the mode the frequency is either f = 8.4672 or 16.9344 MHz.
54	XTAO	O	Output from crystal oscillator circuit. Depending on the mode the frequency is either f = 8.4672 or 16.9344 MHz.
55	MD1	I	Mode selection input 1.
56	MD2	I	Mode selection input 2.
57	MD3	I	Mode selection input 3.
58	SLOB	I	Code switch input for audio data output. 2's complement output when "L", offset binary output when "H".
59	PSSL	I	Code switch input for audio data output. Serial output when "L", parallel output when "H".
60	APTR	O	Control output for aperture compensation. "H" when R-ch.
61	APTL	O	Control output for aperture compensation. "H" when L-ch.
62	DA01	O	DA01 (LSB of parallel audio data) is output when PSSL = "H". C1F1 is output when PSSL = "L".
63	DA02	O	DA02 is output when PSSL = "H". C1F2 is output when PSSL = "L".
64	DA03	O	DA03 is output when PSSL = "H". C2F1 is output when PSSL = "L".
65	DA04	O	DA04 is output when PSSL = "H". C2F2 is output when PSSL = "L".
66	DA05	O	DA05 is output when PSSL = "H". C2FL is output when PSSL = "L".
67	DA06	O	DA06 is output when PSSL = "H". C2PO is output when PSSL = "L".
68	DA07	O	DA07 is output when PSSL = "H". RFCK is output when PSSL = "L".
69	DA08	O	DA08 is output when PSSL = "H". WFCK is output when PSSL = "L".
70	DA09	O	$\overline{\text{DA09}}$ is output when PSSL = "H". $\overline{\text{PLCK}}$ is output when PSSL = "L".
71	DA10	O	DA10 is output when PSSL = "H". UGFS is output when PSSL = "L".
72	DA11	O	DA11 is output when PSSL = "H". GTOP is output when PSSL = "L".
73	VDD	–	Power supply (+5V)
74	DA12	O	DA12 is output when PSSL = "H". RAOV is output when PSSL = "L".
75	DA13	O	DA13 is output when PSSL = "H". C4LR is output when PSSL = "L".
76	DA14	O	$\overline{\text{DA14}}$ is output when PSSL = "H". $\overline{\text{C21O}}$ is output when PSSL = "L".
77	DA15	O	DA15 is output when PSSL = "H". C21O is output when PSSL = "L".
78	DA16	O	DA16 (MSB of parallel audio data) is output when PSSL = "H". DATA is output when PSSL = "L".
79	WDCK	O	Strobe signal output. Output is 176.4 kHz when DF is on. Output is 88.2 kHz when DF is off or when the chip being used is CXD1125Q.
80	LRCK	O	Strobe signal output. Output is 88.2 kHz when DF is on. Output is 44.1 kHz when DF is off or when the chip being used is CXD1125Q.

IC BLOCK DIAGRAM

Pin No.	Pin name (Symbol)	I/O	Function Name	Allocated Function
1	PY0	O	P-CON	Power control signal output
2	PY1	O	MUT	Muting signal output
3	IN2/PY2	I	STOP	Stop key input
4	EC/PY3	I	AUT SPACE	(GND)
5	SC/PX0	O	SQCK	SUB Q input clock output (IC401 pin25)
6	SOB/PX1	O	SOB	SUB Q input monitor output
7	SOA/PX2	O	SOA	SUB Q input monitor output
8	SI/PX3	I	SUBQ	SUB Q input (IC401 pin23)
9	PD0	I	GFS	Flame Sync lock signual input (IC401 pin28)
10	PD1	I	FOK	Focus OK signal input (IC101 pin18)
11	PD2	I	SENS	Sense (IC201 pin18,IC401 pin18)
12	PD3	I	OPNE/ CLOSE	OPEN/CLOSE key input
13	PC0	I	LOCK	Key lock ON/OFF key input
14	PC1	I	SYNC REC	Sync record key input
15	PC2	I	REMA IN	Remain display key input
16	PC3	I	REPEAT	Repeat key input
17	PB0	I	MEMORY	Memory key input
18	PB1	I	PLAY/ PAUSE	PLAY/PAUSE key input
19	PB2	I	FF	FF key input
20	PB3	I	FR	FR key input
21	PA0	I	BATT-E	Battery empty signal input
22	PA1	I	BATT-W	Battery warning signal input
23	PA2	O	DEMP	Emphasis signal output
24	PA3	I	LIMIT	Limit switch signal output
25	VSS	VSS	VSS	Power supply 0V
26	(VDD)	N.C.	N.C.	N.C.
27	PE3/ SEG23	O	XRST	XRST signal (IC201 pin22, IC401 pin16)
28	PE2/ SEG22	O	DATA	Data signal (IC201 pin23, IC401 pin15)
29	PE1/ SEG21	O	XLT	Latch signal (IC201 pin24, IC401 pin14)
30	PE0/ SEG20	O	CLK	Clock signal (IC201 pin25, IC401 pin 13)

Pin No.	Pin name (Symbol)	I/O	Function Name	Allocated Function
31	PF3/ SEG19	O	N.C.	N.C.
32	PF2/ SEG18	O	N.C.	N.C.
33	PF1/ SEG17	O	N.C.	N.C.
34	PF0/ SEG16	O	N.C.	N.C.
35	SEG15	O	SEG15	LCD segment driver output
36	SEG14	O	SEG14	LCD segment driver output
37	SEG13	O	N.C.	N.C.
38	SEG12	O	N.C.	N.C.
39	SEG11	O	SEG11	LCD segment driver output
40	SEG10	O	SEG10	LCD segment driver output
41	SEG9	O	SEG9	LCD segment driver output
42	SEG8	O	SEG8	LCD segment driver output
43	SEG7	O	SEG7	LCD segment driver output
44	SEG6	O	SEG6	LCD segment driver output
45	SEG5	O	SEG5	LCD segment driver output
46	SEG4	O	SEG4	LCD segment driver output
47	SEG3	O	SEG3	LCD segment driver output
48	SEG2	O	SEG2	LCD segment driver output
49	SEG1	O	SEG1	LCD segment driver output
50	SEG0	O	SEG0	LCD segment driver output
51	COM3	O	COM3	LCD common driver output
52	COM2	O	COM2	LCD common driver output
53	COM1	O	COM1	LCD common driver output
54	COM0	O	COM0	LCD common driver output
55	VLC1	VLC1	VLC1	LCD drive power supply
56	VLC2	VLC2	VLC2	LCD drive power supply
57	VLC3	VLC3	VLC3	LCD drive power supply
58	VDD	VDD	VDD	Power supply +5V
59	VL	O	VL	Power supply current cut off
60	XTAL	O	XTAL	X'tal connection pin (4.19MHz)
61	EXTAL	I	EXTAL	X'tal connection pin (4.19MHz)
62	RST	I	RST	Reset signal input
63	WP	I	WP	Hold signal input
64	INT1	I	SCOR	SCOR input (IC401 pin24)

IC502 NJM2903M (Dual Operational Amplifier)

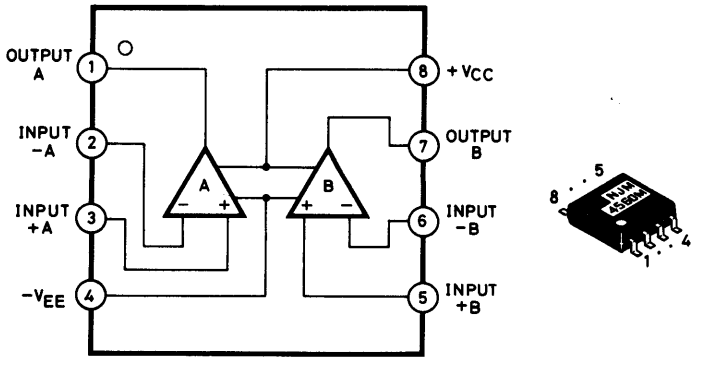

IC503 BA3818F (Remoto Control = Comparate Arra)

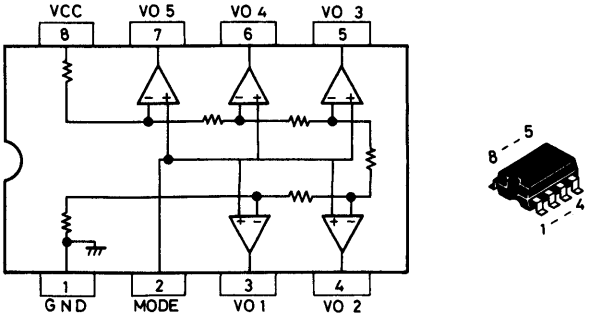

IC BLOCK DIAGRAM

IC402 LC3517AM-15 (Static RAM 2K Word x 8-Bit High-Speed C-MOS)

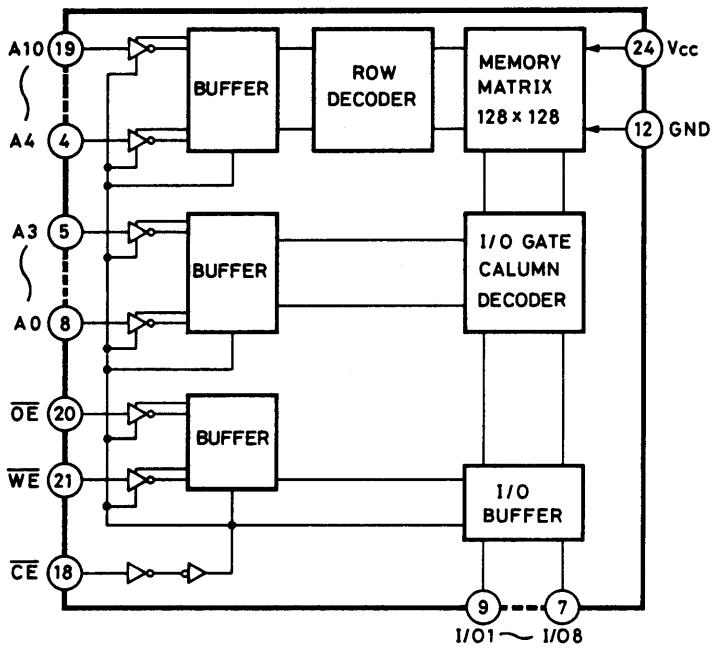

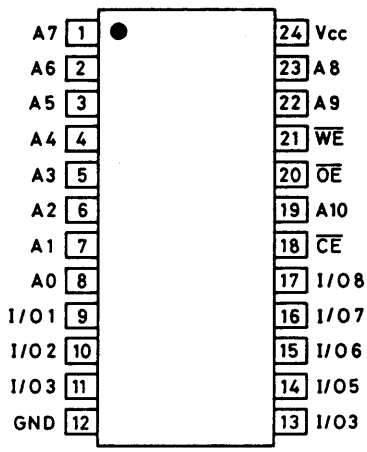

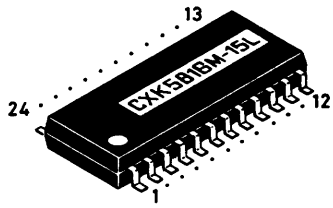

TERMINAL NAME	TERMINAL DESCRIPTION
A0 ~ A10	ADDRESS INPUT
I/O1 I/O8	DATA INPUT / OUTPUT
$\overline{CE}$	CHIP ENABLE INPUT
$\overline{WE}$	WRITE ENABLE INPUT
$\overline{OE}$	OUTPUT ENABLE INPUT
Vcc	+5V POWER SOURCE
GND	GROUND

IC501 CXP5024H-019Q (C-MOS 4-Bit 1-Chip Micro Computer)

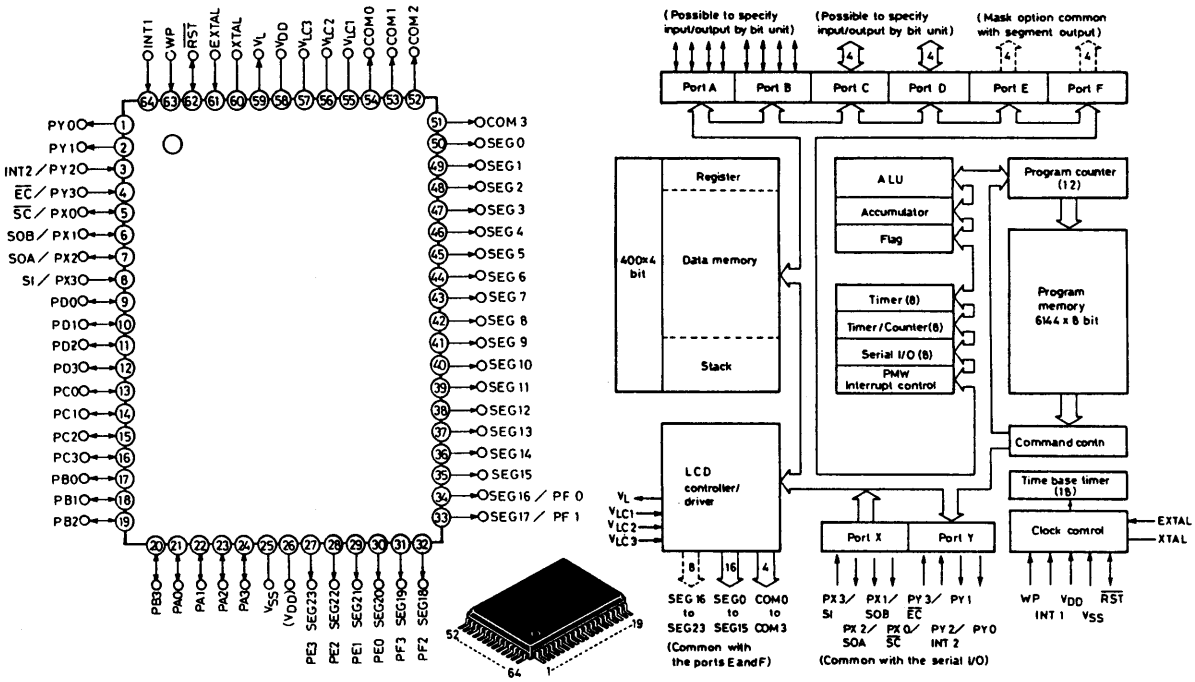

IC BLOCK DIAGRAM

IC601 LC7880M-T1-AP (16-Bit. D/A Converter)

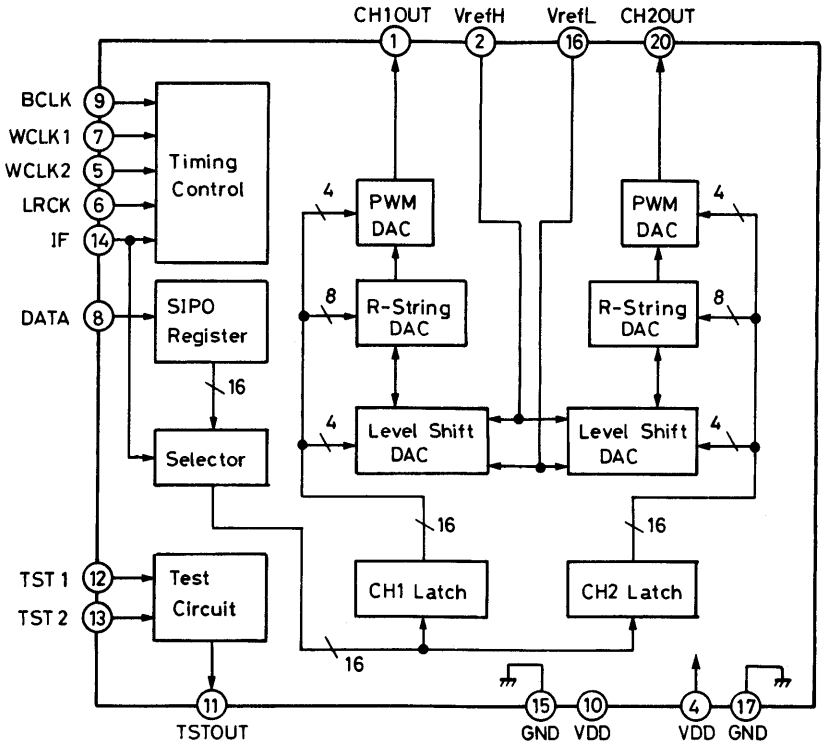

CH1OUT	1	20	CH2OUT
VrefH	2	19	NC
NC	3	18	NC
VDD	4	17	GND
WCLK2	5	16	VrefL
LRCK	6	15	GND
WCLK1	7	14	IF
DATA	8	13	TST2
BCLK	9	12	TST1
VDD	10	11	TSTOUT

NC: No Connection

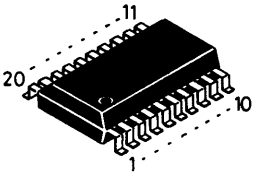

IC602 NJM4560M
IC606 NJM4556M-B (Dual Operational Amplifier)

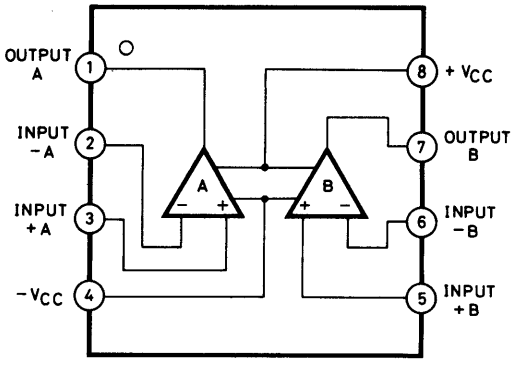

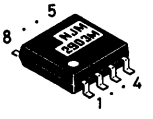

IC603,921 NJM431L (Variable Shunt Regulator)

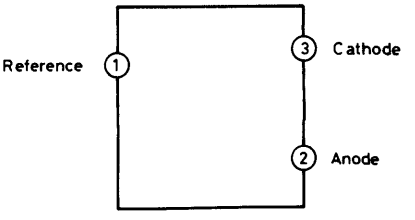

IC604 HAF0255 (Active Low Pass Filter)

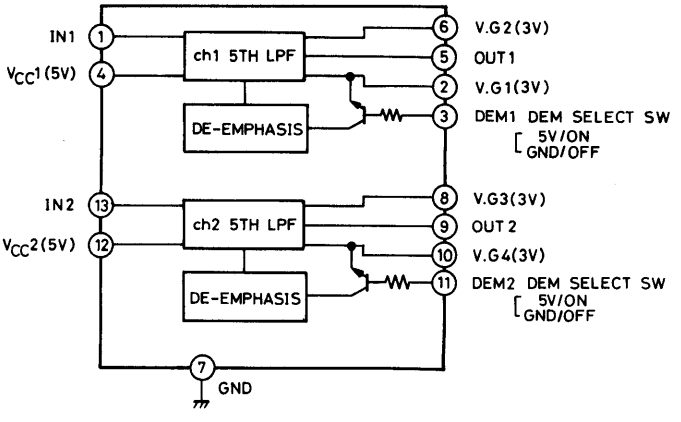

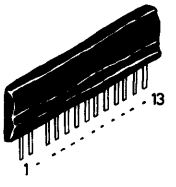

IC BLOCK DIAGRAM

IC605 NJM 4558M
(Dual high Performance Operational Amplifier)

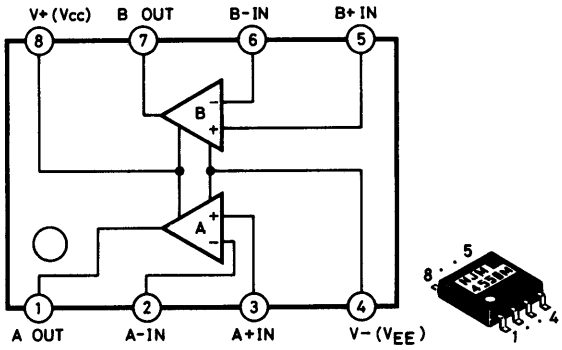

IC901 S81250HG-RD (C-MOS Voltage Regulater)

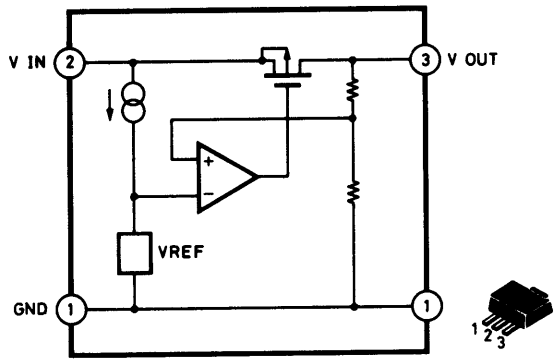

IC902 M5237L (Regulated Power Supply)

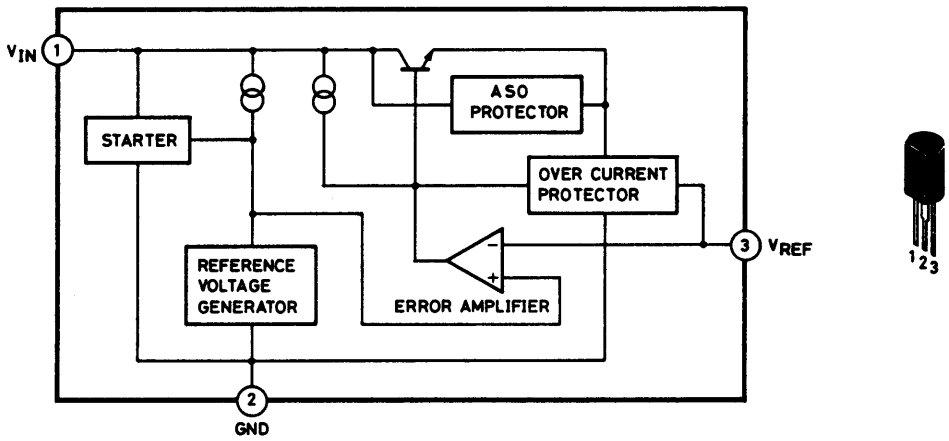

LCD FRD-6554P (LCD of CD)

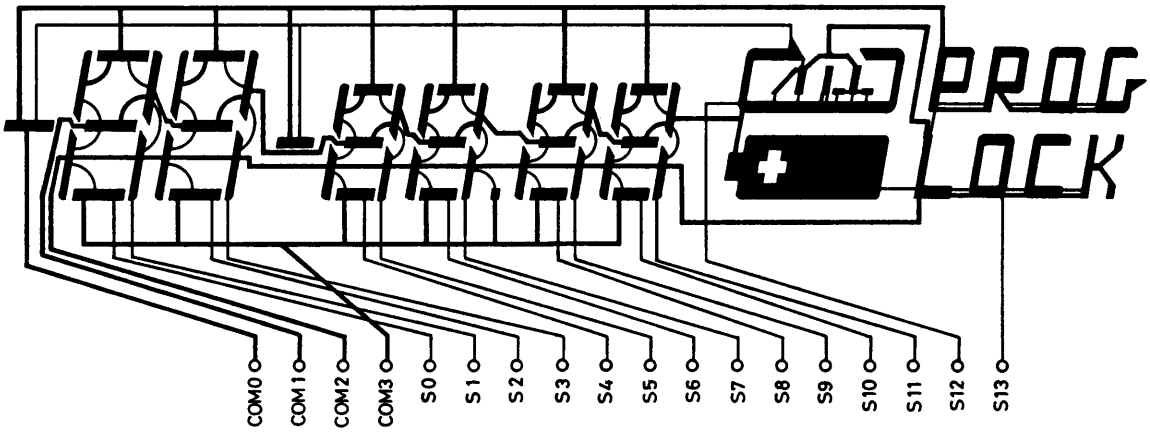

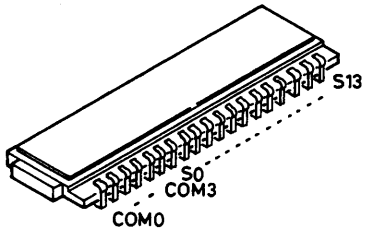

EXPLODED VIEW (RECHARGEABLE BATTERY PACK)

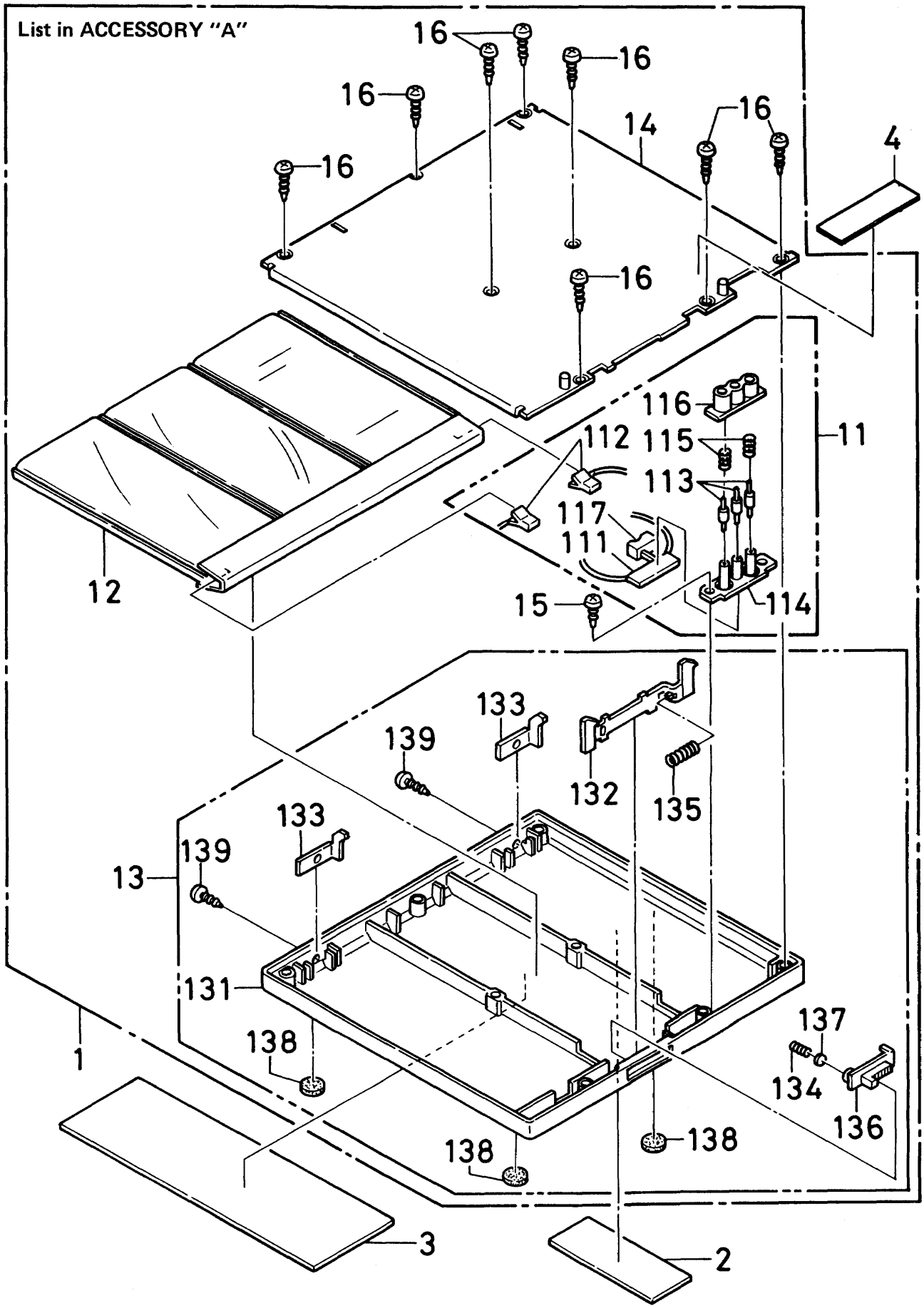

EXPLODED VIEW (BATTERY CASE)

List in ACCESSORY "B"

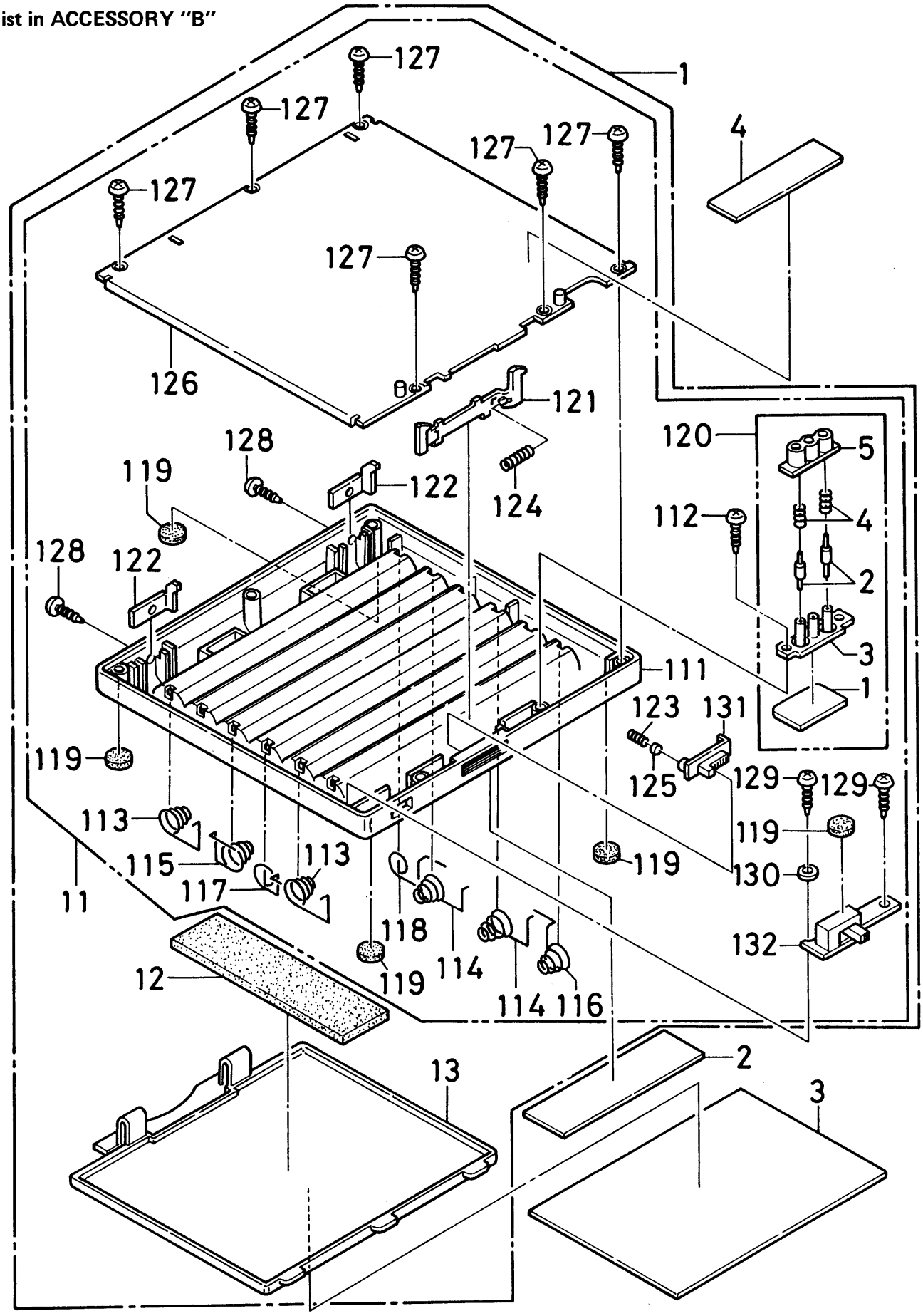

EXPLODED VIEW (CABINET/CHASSIS)

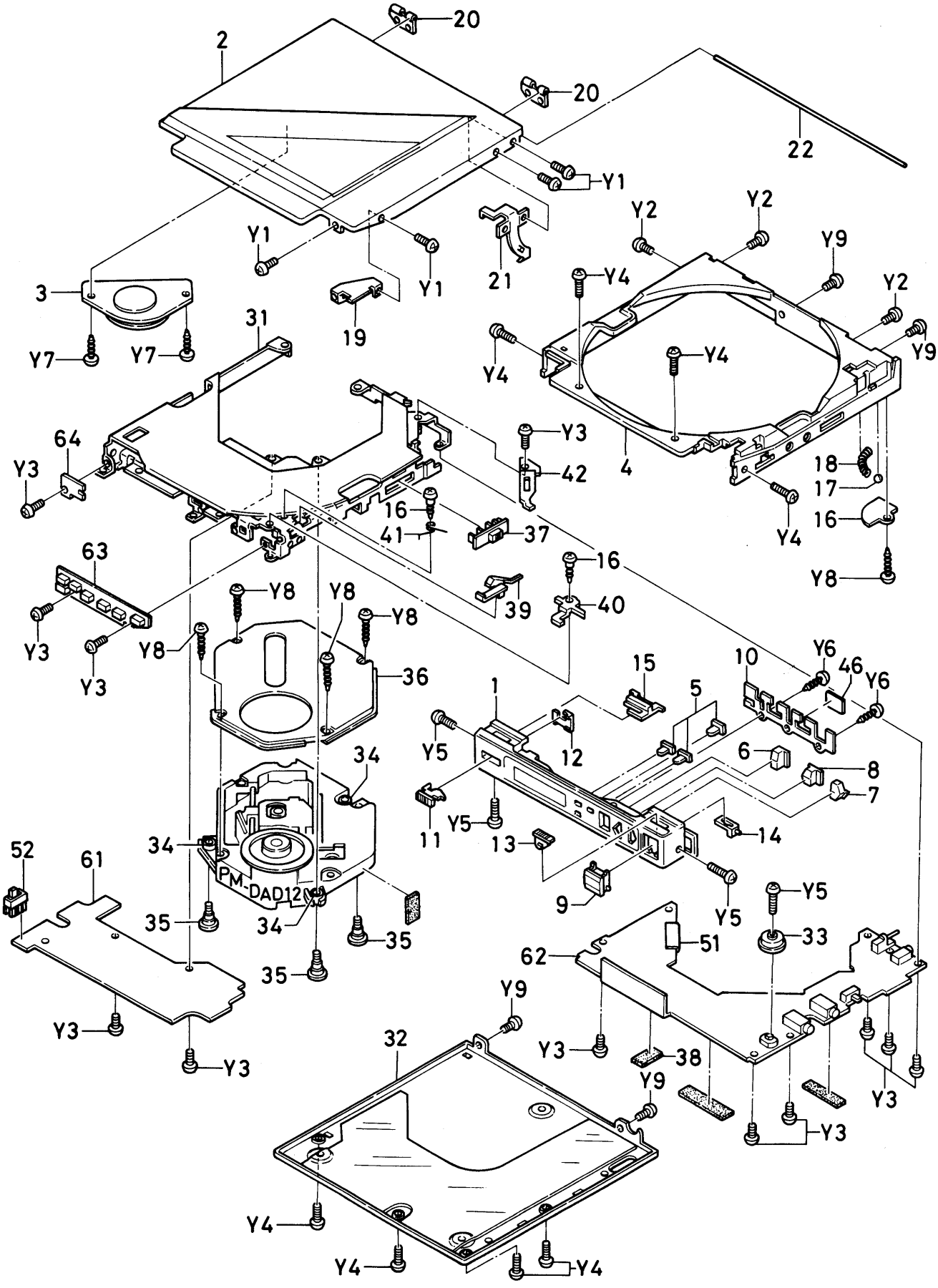

PARTS LIST

PRODUCT SAFETY NOTICE

Each precaution in this manual should be followed during servicing. Components identified with the IEC symbol ⚠ in the parts list and the schematic diagram designate components in which safety can be of special significance. When replacing a component identified with ⚠, use only the replacement parts designated, or parts with the same ratings of resistance, wattage or voltage that are designated in the parts list in this manual.
Leakage-current or resistance measurements must be made to determine that exposed parts are acceptably insulated from the supply circuit before returning the product to the customer.

PACKING & ACCESSORIES

Ref. No.	Part No.	Description
	141-6-133T-91600	INNER CORR CASE
	141-6-145T-21900	FOAM PLASTIC CASE, TOP SIDE
	141-6-145T-22000	FOAM PLASTIC CASE, BOTTOM SIDE
	141-6-231T-15200	INNER POLYE COVER
	141-6-409T-48600	INST MANUAL
	141-6-318T-40500	PAD, AC ADAPTOR
	141-6-318T-40600	PAD, BATTERY PROTECTOR
	141-6-318T-37400	PAD, ACCESSORY
	141-2-176T-08300	BAND, STRAP
or	141-6-318T-37300	PAD, ACCESSORY
	141-2-181T-17000	CASE
	4-243T-44200	LEAD CORD
	⚠ 4-191T-07700	AC ADAPTOR
	4-152T-08301	HEAD PHONE ASSY
	4-236T-11201	PLUG ASSY

ACCESSORY

Ref. No.	Part No.	Description
A	141-0-331T-06303	HOLDER BATTERY ASSY
1	141-0-331T-06300	HOLDER BATTERY ASSY
11	141-0-382T-25700	TERMINAL ASSY, CONNECTOR
111	4-290T-44200	P.C BOARD
112	141-2-382T-25900	TERMINAL, BATTERY CELL (2PC'S)
113	141-2-488T-05300	PIN
114	141-2-382T-25700	TERMINAL
115	141-2-856T-75500	SPRING COIL, SLIDE (2PC'S)
116	141-2-732T-51300	SLIDE
117	SIICPF38+++++	IC ICP-F38
12	4-660T-00200	LEAD BATTERY, BATTERY CELL
13	141-0-125T-45100	BOTTOM LID ASSY
131	141-2-125T-45100	BOTTOM LID
132	141-2-740T-59800	LEVER, LOCK
133	141-2-290T-29000	BRACKET, LOCK (2PC'S)
134	141-2-856T-75300	SPRING COIL, RELEASE KNOB
135	141-2-856T-75400	SPRING COIL, LOCK
136	141-2-164T-49500	SLIDE KNOB, RELEASE
137	141-2-247T-83500	SHEET, SRING COIL FIXER
138	141-2-174T-16700	STAND (3PC'S)
139	411 018 2700	SCR PAN PCS 1.7X3 (2PC'S)
14	141-2-136T-09200	COVER
15	411 099 0107	SCR TPG PAN PCS 1.7X3
16	411 099 0206	SCR TPG PAN PCS 1.7X5
2	141-2-140T-03200	RATING PLATE
3	141-6-479T-94400	LABEL
4	141-6-472T-27701	CAUTION LABEL
B	141-0-331T-06403	HOLDER BATTERY ASSY
1	141-0-331T-06400	HOLDER BATTERY ASSY
11	141-0-125T-45200	BOTTOM LID ASSY
111	141-2-125T-45200	BOTTOM LID
112	411 099 0107	SCR TPG PAN PCS 1.7X3
113	141-2-336T-39200	TERMINAL BATTERY, L(+)(-)
114	141-2-336T-39201	TERMINAL BATTERY, R(+)(-)
115	141-2-336T-39300	TERMINAL BATTERY, L(-)
116	141-2-336T-39301	TERMINAL BATTERY, R(-)
117	141-2-336T-39400	TERMINAL BATTERY, L(+)
118	141-2-336T-39401	TERMINAL BATTERY, R(+)
119	141-2-174T-17000	STAND (5PC'S)
120	141-0-382T-25702	TERMINAL ASSY
120-1	4-290T-44200	P.C BOARD
120-2	141-2-488T-05300	PIN, TERMINAL (3PC'S)
120-3	141-2-382T-25700	TERMINAL
120-4	141-2-856T-75500	SPRING COIL
120-5	141-2-732T-51300	SLIDE
121	141-2-740T-59800	LEVER, LOCK
122	141-2-290T-29000	BRACKET, LOCK
123	141-2-856T-75300	SPRING COIL, RELEASE KNOB
124	141-2-856T-75400	SPRING COIL, LOCK LEVER
125	141-2-247T-83500	SHEET, SPRING COIL FIXER
126	141-2-136T-09201	COVER, TOP
127	BS1BS1R7+5+ZK	SP PANHEAD1B TAPING SCREW
128	411 018 2700	SCR PAN PCS 1.7X3
129	411 030 1002	SCR TPG PAN PCS 1.7X5
130	141-2-453T-05600	WASHER 1.7X3.3X0.3T, SELECT SW PCB
131	141-2-164T-49500	SLIDE KNOB, RELEASE
132	141-4-290T-55500	P.C BOARD ASSY, SWITCH
132-1	4-290T-55500	P.C BOARD
132-2	4-238T-37300	SWITCH
14	141-2-448T-42000	CUSHION
15	141-2-128T-27400	BATTERY LID
2	141-2-140T-04300	RATING PLATE
3	141-6-479T-95200	LABEL
4	141-6-472T-27701	CAUTION LABEL

CABINET

Ref. No.	Part No.	Description
1	141-0-122T-68200	FRONT PANEL ASSY
2	141-0-124T-54400	TOP LID ASSY
3	141-0-290T-27500	BRACKET ASSY
4	141-2-121T-22300	DECK PANEL
5	141-2-160T-84200	PUSH BUTTON, MODE
6	141-2-160T-84300	PUSH BUTTON, STOP
7	141-2-160T-84400	PUSH BUTTON, FF
8	141-2-160T-84500	PUSH BUTTON, REW
9	141-2-160T-84600	PUSH BUTTON, PLAY
10	141-2-853T-96600	SPRING PLATE, PUSH BUTTON STOPPER
11	141-2-164T-48700	SLIDE KNOB, LOCK
12	141-2-210T-84600	BRACKET, KNOB(11) MTG.
13	141-2-164T-48400	SLIDE KNOB, OPEN
14	141-2-210T-84300	BRACKET, KNOB(13) MTG.
15	141-2-160T-84100	PUSH BUTTON, MUTE
16	141-2-290T-28800	BRACKET, STEEL BALL(17)
17	141-2-345T-01300	STEEL BALL 3MM
18	141-2-856T-74100	SPRING COIL, STEEL BALL(17)
19	141-2-290T-27300	BRACKET, TOP LID(2) HOOK
20	141-2-251T-09100	HINGE, TOP LID(2)
21	141-2-290T-27400	BRACKET, TOP LID(2)
22	141-2-754T-98600	SHAFT, TOP LID(2)

PARTS LIST

CHASSIS

Ref. No.	Part No.	Description
31	141-0-214T-10000	BRACKET FRAME ASSY
32	141-0-125T-44304	BOTTOM LID ASSY
33	141-0-165T-09100	ROTARY KNOB ASSY, VOLUME
34	141-2-445T-35800	RUBBER CUSHION, MECHANISM FLOAT (3PC'S)
35	141-2-421T-70400	SPECIAL SCREW, MECHANISM FLOAT(3PC'S)
36	141-2-154T-18000	ESCUTCHEON, MECHANISM COVER
37	141-2-164T-48500	SLIDE KNOB, POWER SW
38	141-2-445T-36200	RUBBER CUSHION, PCB FIXER
39	141-2-732T-51200	SLIDE, TOP LID HOOK
40	141-2-740T-58600	LEVER, OPENER
41	141-2-856T-74000	SPRING COIL, LEVER(40) RETURN
42	141-2-853T-96500	SPRING PLATE, TOP LID OPENER
43	412 005 4301	SPECIAL SCREW, (40.41) MTG.
44	141-2-447T-04100	CUSHION 10X20MM
45	141-2-461T-52400	PIPE (3PC'S)
46	141-2-247T-86900	SHEET, 4X10X0.3T, SPRING PLATE(10)
	123-2-472R-00200	LUG

FIXING PARTS

Ref. No.	Part No.	Description
Y1	412 021 5801	SPECIAL SCREW (4PC'S)
Y2	411 019 3805	SCR PAN PCS 1.4X2 (2PC'S)
Y3	411 019 3607	SCR PAN PCS 1.4X2 (13PC'S)
Y4	412 021 5405	SPECIAL SCREW (9PC'S)
Y5	412 021 5504	SPECIAL SCREW (4PC'S)
Y6	BS3BS1R42R+N1	SP PAN HEAD3B TAPING SCREW (2PC'S)
Y7	411 030 0005	SCR TPG PAN PCS 1.7X2.5 (2PC'S)
Y8	411 030 2504	SCR TPG PAN PCS 1.7X4 (5PC'S)
Y9	412 021 5603	SPECIAL SCREW (4PC'S)

ELECTRICAL PARTS

Ref. No.	Part No.	Description
51	141-2-320T-01200	SHIELD PLATE
52	4-248T-36000	SWITCH, OPEN/CLOSE (S502)

RF AMP & DRIVER P.C.BOARD ASSY

Ref. No.	Part No.	Description
61	141-4-290T-43700	P.C BOARD ASSY, RF AMP & DRIVER
	4-267T-50400	SOCKET, SENSOR & APC F T COIL
	4-267T-50500	SOCKET
L101	4-253T-20623	FILTER
L301	4-252T-15800	CHOKE COIL
S601	4-248T-14100	SWITCH, MUTE
SVR101	4-220T-32085	V.R 22KB, TRACKING BALANCE
SVR102	4-220T-32087	V.R 47KB, FOCUS OFF SET
IC101	409 108 5502	IC CXA1081M, RF AMP
IC301	409 074 0501	IC BA6280AF, PWM DRIVER
or	409 074 9207	IC CXA1083M, PWM DRIVER
IC302	409 074 0501	IC BA6280AF, PWM DRIVER
or	409 074 9207	IC CXA1083M, PWM DRIVER
Q101	405 008 6403	TR 2SB798-DL
D301	407 066 8702	DIODE SB10-05PCP
D302	407 066 8702	DIODE SB10-05PCP
D303	407 066 8702	DIODE SB10-05PCP
D304	407 066 8702	DIODE SB10-05PCP
D305	407 066 8702	DIODE SB10-05PCP
D306	407 066 8702	DIODE SB10-05PCP
D307	407 066 8702	DIODE SB10-05PCP
D308	407 066 8702	DIODE SB10-05PCP
C101	403 091 0308	TA-SOLID 1U M 16V
C102	403 069 5601	CERAMIC 0.01U K 50V
C104	403 025 1708	CERAMIC 4P C 50V
C105	403 068 3301	CERAMIC 0.033U K 25V
C106	403 073 0005	CERAMIC 3300P K 50V
C107	403 069 5601	CERAMIC 0.01U K 50V
C108	403 091 8700	TA-SOLID 0.47U M 25V
C110	CT6R3226MZTEZ	CHP TNTAL 22U 6.3V M Z TE
C111	CT6R3685MZTEZ	CHP TNTL 6.8U 6.3V M Z TE
C112	CT6R3685MZTEZ	CHP TNTL 6.8U 6.3V M Z TE
C113	CT6R3226MZTEZ	CHP TNTAL 22U 6.3V M Z TE
C114	403 069 1702	CERAMIC 1000P K 50V
C302	403 071 8102	CERAMIC 2200P K 50V
C303	CT6R3225MZYEZ	CHP TNTL 2.2U 6.3V M Z YE
C304	403 068 2502	CERAMIC 0.22U Z 25V
C305	403 073 0005	CERAMIC 3300P K 50V
C306	403 073 0005	CERAMIC 3300P K 50V
C307	403 071 8102	CERAMIC 2200P K 50V
C308	CT6R3225MZYEZ	CHP TNTL 2.2U 6.3V M Z YE
C309	403 068 2502	CERAMIC 0.22U Z 25V
C310	403 069 5601	CERAMIC 0.01U K 50V
C311	403 069 5601	CERAMIC 0.01U K 50V
C312	CE+16476MVKSB	ELECT 47U 16V M V KS B
R101	401 037 5400	MT-GLAZE 1K JA 1/10W
R102	401 037 6803	MT-GLAZE 12K JA 1/10W
R103	401 039 0403	MT-GLAZE 8.2K JA 1/10W
R104	401 038 3702	MT-GLAZE 33K JA 1/10W
R105	401 038 0800	MT-GLAZE 22K JA 1/10W
R106	401 037 5707	MT-GLAZE 100K JA 1/10W
R108	RM/+8390JZM+Z	MT-GLAZE Z 39 J 1/8W Z
R109	RM/+8390JZM+Z	MT-GLAZE Z 39 J 1/8W Z
R111	401 038 3603	MT-GLAZE 3.3K JA 1/10W
R112	401 038 3603	MT-GLAZE 3.3K JA 1/10W
R301	401 039 0403	MT-GLAZE 8.2K JA 1/10W
R304	401 038 6406	MT-GLAZE 4.7K JA 1/10W
R305	401 036 0406	MT-GLAZE 2.2 KA 1/8W
R306	401 036 0406	MT-GLAZE 2.2 KA 1/8W
R307	401 036 0406	MT-GLAZE 2.2 KA 1/8W
R308	401 036 0406	MT-GLAZE 2.2 KA 1/8W
R309	401 038 3603	MT-GLAZE 3.3K JA 1/10W
R310	401 038 0701	MT-GLAZE 2.2K JA 1/10W
R311	401 038 6406	MT-GLAZE 4.7K JA 1/10W
R312	401 036 0406	MT-GLAZE 2.2 KA 1/8W
R313	401 036 0406	MT-GLAZE 2.2 KA 1/8W
R314	401 036 0406	MT-GLAZE 2.2 KA 1/8W
R315	401 036 0406	MT-GLAZE 2.2 KA 1/8W

MAIN AMP P.C.BOARD ASSY

Ref. No.	Part No.	Description
62	141-4-290T-43800	P.C BOARD ASSY, MAIN AMP
	4-970T-03400	LCD
	141-2-290T-27600	BRACKET
	141-2-382T-25500	TERMINAL, BATT.IN
	4-267T-11800	SOCKET, LINE OUT
	4-267T-11871	SOCKET, PHONES
	4-267T-11872	SOCKET, REMOTE
	4-235T-93371	SOCKET, DC IN
	141-2-247T-86300	SHEET
	4-236T-37779	PLUG, 9P
	4-267T-50600	SOCKET
	4-267T-50700	SOCKET
	141-2-320T-01500	SHIELD PLATE
	141-2-320T-01600	SHIELD PLATE
ICP951	S11CPF15+++++	FUSE PROTECTOR ICP-F15
L401	4-253T-20623	FILTER
L601	4-253T-20623	FILTER
X401	4-266T-01900	CERAMIC RESONATOR
X501	4-266T-01300	CERAMIC RESONATOR
S501	4-248T-35900	SWITCH, POWER
VR601	4-220T-36800	V.R 20KB, VOLUME
SVR201	4-220T-45685	SEMI V.R 22KB, FOCUS GAIN

PARTS LIST

Ref. No.	Part No.	Description
SVR202	4-220T-45685	SEMI V.R 22KB, TRACKING GAIN
SVR203	4-220T-45679	SEMI V.R 2.2KB, PLL VCO FREE-RUN
IC201	409 108 5601	IC CXA1082AQ, SSP
IC401	409 108 5700	IC CXD1130Q, DSP
IC402	SICXK5816M15G	IC CXK5816M-15L-T1
or	409 020 6205	IC LC3517AM-15
IC501	410 022 6902	IC CXP5024H-019Q
IC502	409 039 6302	IC NJM2903M
IC503	409 108 5809	IC BA3818F
IC601	SILC7880M+++G	IC LC7880M-T1-TP
IC602	409 039 8603	IC NJM4560M
IC603	409 108 6004	IC NJM431L
IC604	409 110 2605	IC HAF0255
IC605	409 039 7804	IC NJM4558M
IC606	409 108 5908	IC NJM4556M-B
IC901	409 108 8305	IC S-81250HG-RD
IC902	409 036 8408	IC M5237L
IC921	409 108 6004	IC NJM431L
Q501	405 000 1109	TR DTA124EK
Q502	405 000 1109	TR DTA124EK
Q503	405 058 5401	TR FMC2
Q504	405 000 1109	TR DTA124EK
Q505	405 014 4509	TR 2SC2412K-R
Q701	STD1048X6+++Z	TR 2SD1048X6
or	405 021 2406	TR 2SD1048-X7
Q702	STD1048X6+++Z	TR 2SD1048X6
or	405 021 2406	TR 2SD1048-X7
Q703	STD1048X6+++Z	TR 2SD1048X6
or	405 021 2406	TR 2SD1048-X7
Q801	STD1048X6+++Z	TR 2SD1048X6
or	405 021 2406	TR 2SD1048-X7
Q802	STD1048X6+++Z	TR 2SD1048X6
or	405 021 2406	TR 2SD1048-X7
Q803	STD1048X6+++Z	TR 2SD1048X6
or	405 021 2406	TR 2SD1048-X7
Q901	405 003 0307	TR 2SA1241-Y
Q902	405 000 4100	TR DTC124EK
Q903	405 007 0105	TR 2SB1142-S-LT
Q904	STD1048X6+++Z	TR 2SD1048X6
or	405 021 2406	TR 2SD1048-X7
Q905	STD1048X6+++Z	TR 2SD1048X6
or	405 021 2406	TR 2SD1048-X7
Q906	405 035 1105	TR FMW1
Q907	405 008 6403	TR 2SB798-DL
Q908	405 000 4100	TR DTC124EK
Q921	405 000 1109	TR DTA124EK
Q922	405 003 0307	TR 2SA1241-Y
Q923	405 008 6403	TR 2SB798-DL
Q924	405 035 1105	TR FMW1
Q925	405 002 0308	TR 2SA1037K-R
D501	407 003 4507	DIODE DAP202K
D502	407 003 4507	DIODE DAP202K
D503	407 003 4507	DIODE DAP202K
D601	407 003 5108	DIODE DA204K
D901	407 003 4507	DIODE DAP202K
D921	407 066 8702	DIODE SB10-05PCP
D922	407 003 4507	DIODE DAP202K
C109	403 069 5601	CERAMIC 0.01U K 50V
C201	403 100 9704	CERAMIC 0.1U M 25V
C202	403 068 3301	CERAMIC 0.033U K 25V
C203	CT++4106MZTEZ	CHP TNTL 10U 4V M Z TE
C204	403 071 8102	CERAMIC 2200P K 50V
C205	403 073 9107	CERAMIC 4700P K 50V
C206	CC+25473KZYBZ	CHIP CC 0.047 25V K Z YB
C207	403 068 3301	CERAMIC 0.033U K 25V
C208	403 100 9704	CERAMIC 0.1U M 25V
C209	CT++4106MZTEZ	CHP TNTL 10U 4V M Z TE
C210	403 100 9704	CERAMIC 0.1U M 25V
C211	403 026 2902	CERAMIC 47P J 50V
C212	403 069 5601	CERAMIC 0.01U K 50V
C213	403 091 0308	TA-SOLID 1U M 16V
C214	CT6R3685MZTEZ	CHP TNTL 6.8U 6.3V M Z TE

Ref. No.	Part No.	Description
C215	403 091 8700	TA-SOLID 0.47U M 25V
C216	403 068 3301	CERAMIC 0.033U K 25V
C217	403 070 9803	CERAMIC 0.015U K 50V
C221	403 068 0409	CERAMIC 0.1U Z 25V
C222	403 068 0409	CERAMIC 0.1U Z 25V
C223	CT6R3685MZTEZ	CHP TNTL 6.8U 6.3V M Z TE
C224	CT6R3685MZTEZ	CHP TNTL 6.8U 6.3V M Z TE
C401	403 038 9104	ELECT 33U M 6.3V
C402	403 068 0409	CERAMIC 0.1U Z 25V
C403	403 068 0409	CERAMIC 0.1U Z 25V
C404	403 069 1702	CERAMIC 1000P K 50V
C405	403 024 2102	CERAMIC 39P J 50V
C406	403 024 2102	CERAMIC 39P J 50V
C501	403 022 8205	CERAMIC 33P J 50V
C502	403 022 8205	CERAMIC 33P J 50V
C503	CT6R3225MZYEZ	CHP TNTL 2.2U 6.3V M Z YE
C505	403 068 0409	CERAMIC 0.1U Z 25V
C506	403 068 5107	CERAMIC 0.047U Z 25V
C507	403 068 0409	CERAMIC 0.1U Z 25V
C508	403 069 5601	CERAMIC 0.01U K 50V
C509	403 069 5601	CERAMIC 0.01U K 50V
C510	403 068 0409	CERAMIC 0.1U Z 25V
C601	403 038 9104	ELECT 33U M 6.3V
C602	403 039 2708	ELECT 47U M 6.3V
C603	403 039 2708	ELECT 47U M 6.3V
C604	403 068 0409	CERAMIC 0.1U Z 25V
C607	CT6R3685MZTEZ	CHP TNTL 6.8U 6.3V M Z TE
C608	CT6R3225MZYEZ	CHP TNTL 2.2U 6.3V M Z YE
C609	403 091 0308	TA-SOLID 1U M 16V
C610	403 091 0308	TA-SOLID 1U M 16V
C611	403 068 0409	CERAMIC 0.1U Z 25V
C701	CC+50030CZCHR	CHIP CC 3P 50V C Z CH
C702	CT6R3225MZYEZ	CHP TNTL 2.2U 6.3V M Z YE
C703	CT+10475MZTEZ	CHP TNTL 4.7U 10V M Z TE
C704	403 009 5807	CERAMIC 100P J 50V
C705	403 091 0308	TA-SOLID 1U M 16V
C706	CT+10475MZTEZ	CHP TNTL 4.7U 10V M Z TE
C707	403 038 2105	ELECT 100U M 6.3V
C708	403 069 1702	CERAMIC 1000P K 50V
C801	CC+50030CZCHR	CHIP CC 3P 50V C Z CH
C802	CT6R3225MZYEZ	CHP TNTL 2.2U 6.3V M Z YE
C803	CT+10475MZTEZ	CHP TNTL 4.7U 10V M Z TE
C804	403 009 5807	CERAMIC 100P J 50V
C805	403 091 0308	TA-SOLID 1U M 16V
C806	CT+10475MZTEZ	CHP TNTL 4.7U 10V M Z TE
C807	403 038 2105	ELECT 100U M 6.3V
C808	403 069 1702	CERAMIC 1000P K 50V
C901	CE+16476MVKSB	ELECT 47U 16V M V KS B
C902	403 068 5107	CERAMIC 0.047U Z 25V
C903	403 050 2008	ELECT 2.2U M 50V
C904	403 040 2308	ELECT 22U M 10V
C905	403 069 1702	CERAMIC 1000P K 50V
C906	403 038 2105	ELECT 100U M 6.3V
C907	403 068 2502	CERAMIC 0.22U Z 25V
C908	CT+16335MZTEZ	CHP TNTL 3.3U 16V M Z TE
C909	403 068 0409	CERAMIC 0.1U Z 25V
C910	CT+10475MZTEZ	CHP TNTL 4.7U 10V M Z TE
C911	403 091 0308	TA-SOLID 1U M 16V
C912	403 038 9104	ELECT 33U M 6.3V
C913	403 039 2708	ELECT 47U M 6.3V
C921	403 050 2008	ELECT 2.2U M 50V
C922	403 050 2008	ELECT 2.2U M 50V
C951	403 068 5107	CERAMIC 0.047U Z 25V
R107	401 037 5608	MT-GLAZE 10K JA 1/10W
R201	401 038 9308	MT-GLAZE 68K JA 1/10W
R202	401 037 5608	MT-GLAZE 10K JA 1/10W
R203	401 037 8104	MT-GLAZE 150K JA 1/10W
R204	401 037 5707	MT-GLAZE 100K JA 1/10W
R205	401 038 6505	MT-GLAZE 47K JA 1/10W
R206	401 037 8005	MT-GLAZE 15K JA 1/10W
R207	401 039 0502	MT-GLAZE 82K JA 1/10W
R208	401 038 0800	MT-GLAZE 22K JA 1/10W
R209	401 037 5707	MT-GLAZE 100K JA 1/10W
R210	401 039 0403	MT-GLAZE 8.2K JA 1/10W

PARTS LIST

Ref. No.	Part No.	Description
R213	401 037 5707	MT-GLAZE 100K JA 1/10W
R214	401 038 5409	MT-GLAZE 390K JA 1/10W
R215	401 037 5608	MT-GLAZE 10K JA 1/10W
R216	401 037 5707	MT-GLAZE 100K JA 1/10W
R217	401 037 5707	MT-GLAZE 100K JA 1/10W
R218	401 037 9408	MT-GLAZE 180K JA 1/10W
R219	401 038 3603	MT-GLAZE 3.3K JA 1/10W
R220	401 038 0800	MT-GLAZE 22K JA 1/10W
R221	401 037 5806	MT-GLAZE 1M JA 1/10W
R222	401 037 5707	MT-GLAZE 100K JA 1/10W
R223	401 037 8005	MT-GLAZE 15K JA 1/10W
R224	401 038 0800	MT-GLAZE 22K JA 1/10W
R225	401 038 0800	MT-GLAZE 22K JA 1/10W
R401	401 037 5707	MT-GLAZE 100K JA 1/10W
R402	401 037 5608	MT-GLAZE 10K JA 1/10W
R403	401 037 5806	MT-GLAZE 1M JA 1/10W
R501	401 038 3801	MT-GLAZE 330K JA 1/10W
R502	401 038 0800	MT-GLAZE 22K JA 1/10W
R503	401 037 5707	MT-GLAZE 100K JA 1/10W
R505	401 038 0800	MT-GLAZE 22K JA 1/10W
R506	401 038 0800	MT-GLAZE 22K JA 1/10W
R507	401 038 0800	MT-GLAZE 22K JA 1/10W
R508	401 038 3702	MT-GLAZE 33K JA 1/10W
R509	401 038 6406	MT-GLAZE 4.7K JA 1/10W
R510	401 038 5300	MT-GLAZE 39K JA 1/10W
R514	401 038 2101	MT-GLAZE 2.7K JA 1/10W
R515	401 038 6307	MT-GLAZE 470 JA 1/10W
R516	401 037 5707	MT-GLAZE 100K JA 1/10W
R601	401 037 5202	MT-GLAZE 100 JA 1/10W
R602	401 037 9200	MT-GLAZE 1.8K JA 1/10W
R603	401 038 2101	MT-GLAZE 2.7K JA 1/10W
R604	401 037 5202	MT-GLAZE 100 JA 1/10W
R605	401 037 5608	MT-GLAZE 10K JA 1/10W
R606	401 037 8005	MT-GLAZE 15K JA 1/10W
R701	401 037 5608	MT-GLAZE 10K JA 1/10W
R702	401 037 5707	MT-GLAZE 100K JA 1/10W
R703	401 038 6307	MT-GLAZE 470 JA 1/10W
R704	401 038 6307	MT-GLAZE 470 JA 1/10W
R705	401 038 2101	MT-GLAZE 2.7K JA 1/10W
R706	401 038 6505	MT-GLAZE 47K JA 1/10W
R707	401 038 6406	MT-GLAZE 4.7K JA 1/10W
R708	401 038 9308	MT-GLAZE 68K JA 1/10W
R709	401 037 5608	MT-GLAZE 10K JA 1/10W
R710	RM⁄+8270JZM+Z	MT-GLAZE Z 27 J 1/8W Z
R711	401 038 2101	MT-GLAZE 2.7K JA 1/10W
R712	401 038 0800	MT-GLAZE 22K JA 1/10W
R713	401 037 5400	MT-GLAZE 1K JA 1/10W
R714	401 038 2101	MT-GLAZE 2.7K JA 1/10W
R801	401 037 5608	MT-GLAZE 10K JA 1/10W
R802	401 037 5707	MT-GLAZE 100K JA 1/10W
R803	401 038 6307	MT-GLAZE 470 JA 1/10W
R804	401 038 6307	MT-GLAZE 470 JA 1/10W
R805	401 038 2101	MT-GLAZE 2.7K JA 1/10W
R806	401 038 6505	MT-GLAZE 47K JA 1/10W
R807	401 038 6406	MT-GLAZE 4.7K JA 1/10W
R808	401 038 9308	MT-GLAZE 68K JA 1/10W
R809	401 037 5608	MT-GLAZE 10K JA 1/10W
R810	RM⁄+8270JZM+Z	MT-GLAZE Z 27 J 1/8W Z
R811	401 038 2101	MT-GLAZE 2.7K JA 1/10W
R812	401 038 0800	MT-GLAZE 22K JA 1/10W
R813	401 037 5400	MT-GLAZE 1K JA 1/10W
R814	401 038 2101	MT-GLAZE 2.7K JA 1/10W
R901	401 038 0800	MT-GLAZE 22K JA 1/10W
R902	401 038 7601	MT-GLAZE 560 JA 1/10W
R903	401 038 0602	MT-GLAZE 220 JA 1/10W
R904	401 037 8005	MT-GLAZE 15K JA 1/10W
R905	401 037 6803	MT-GLAZE 12K JA 1/10W
R906	401 038 5102	MT-GLAZE 3.9K JA 1/10W
R907	401 038 2101	MT-GLAZE 2.7K JA 1/10W
R908	401 038 6604	MT-GLAZE 470K JA 1/10W
R909	401 038 9407	MT-GLAZE 680K JA 1/10W
R910	401 038 0909	MT-GLAZE 220K JA 1/10W
R911	401 038 6406	MT-GLAZE 4.7K JA 1/10W

Ref. No.	Part No.	Description
R912	401 038 6505	MT-GLAZE 47K JA 1/10W
R913	401 037 5400	MT-GLAZE 1K JA 1/10W
R921	401 037 5400	MT-GLAZE 1K JA 1/10W
R922	401 037 5400	MT-GLAZE 1K JA 1/10W
R923	401 037 9200	MT-GLAZE 1.8K JA 1/10W
R924	401 037 9200	MT-GLAZE 1.8K JA 1/10W
R925	401 039 0403	MT-GLAZE 8.2K JA 1/10W
R926	401 038 0800	MT-GLAZE 22K JA 1/10W

KEY SWITCH P.C.BOARD ASSY

Ref. No.	Part No.	Description
63	141-4-290T-43900	P.C BOARD ASSY, KEY SW
	4-267T-50800	SOCKET
	4-248T-03800	SWITCH. S504~510

LOCK SWITCH P.C.BOARD ASSY

Ref. No.	Part No.	Description
64	141-4-290T-44000	P.C BOARD ASSY, LOCK SW
	4-267T-50900	SOCKET
S503	4-248T-36100	SWITCH, LOCK

PARTS LIST

MECHANISM

Ref. No.	Part No.	Description
M1	141-2-311T-55800	CHASSIS
M2	141-2-754T-99200	SHAFT, PICK UP RAIL GUIDE
M3	141-2-853T-96900	SPRING PLATE, SHAFT (M2) FIXER
M4	141-2-754T-99300	SHAFT, PICK UP STANDARD
M5	141-2-853T-96800	SPRING PLATE, SHAFT (M4) FIXER
M6	141-2-853T-93700	SPRING PLATE, SHAFT (M4) FIXER
M7	4-180T-00900	PICK UP
M8	141-2-210T-84800	BRACKET, PICK UP (M7) MTG.
M9	141-2-740T-59100	LEVER, BRACKET (M8) MTG.
M10	141-2-856T-74700	SPRING COIL, BRACKET (M8)
M11	4-527T-31101	COMMUTATE MOTOR ASSY, SLED MOTOR
M12	141-2-378T-19900	BRACKET MOTOR, MOTOR (M11) MTG.
M13	141-2-573T-19500	BEARING, SPECIAL SCREW (M15)
M14	141-2-573T-19600	BEARING
M15	141-2-421T-70100	SPECIAL SCREW
M16	141-2-853T-93800	SPRING PLATE, GEAR (M17) MTG.
M17	141-2-581T-46700	GEAR
M18	412 014 4002	SPECIAL WASHER
M19	141-2-564T-43900	SQUARE BELT
M20	4-248T-36400	SWITCH
M21	412 013 0401	SPECIAL WASHER
M22	4-527T-33400	COMMUTATE MOTOR, SPINDLE MOTOR
M23	141-2-457T-48800	SPECIAL WASHER
M24	141-0-118T-05000	TURN TABLE ASSY
M25	123-2-472R-00200	LUG

FIXING PARTS (MECHANISM)

Ref. No.	Part No.	Description
Y21	411 102 9004	SCR TPG PAN PCS 1.7X6
Y22	411 022 7807	SCR S-TPG PAN 2X6
Y23	411 039 1508	SCR PAN 2X5
Y24	411 088 6301	WASHER F 2X4.3X0.3
Y25	411 039 0105	SCR PAN 2X3
Y26	WJNWS++2O05Z1	SPRING WASHER 2
Y27	411 102 9004	SCR TPG PAN PCS 1.7X6
Y28	411 033 2402	SCR FLT 2X3

EXPLODED VIEW (MECHANISM)

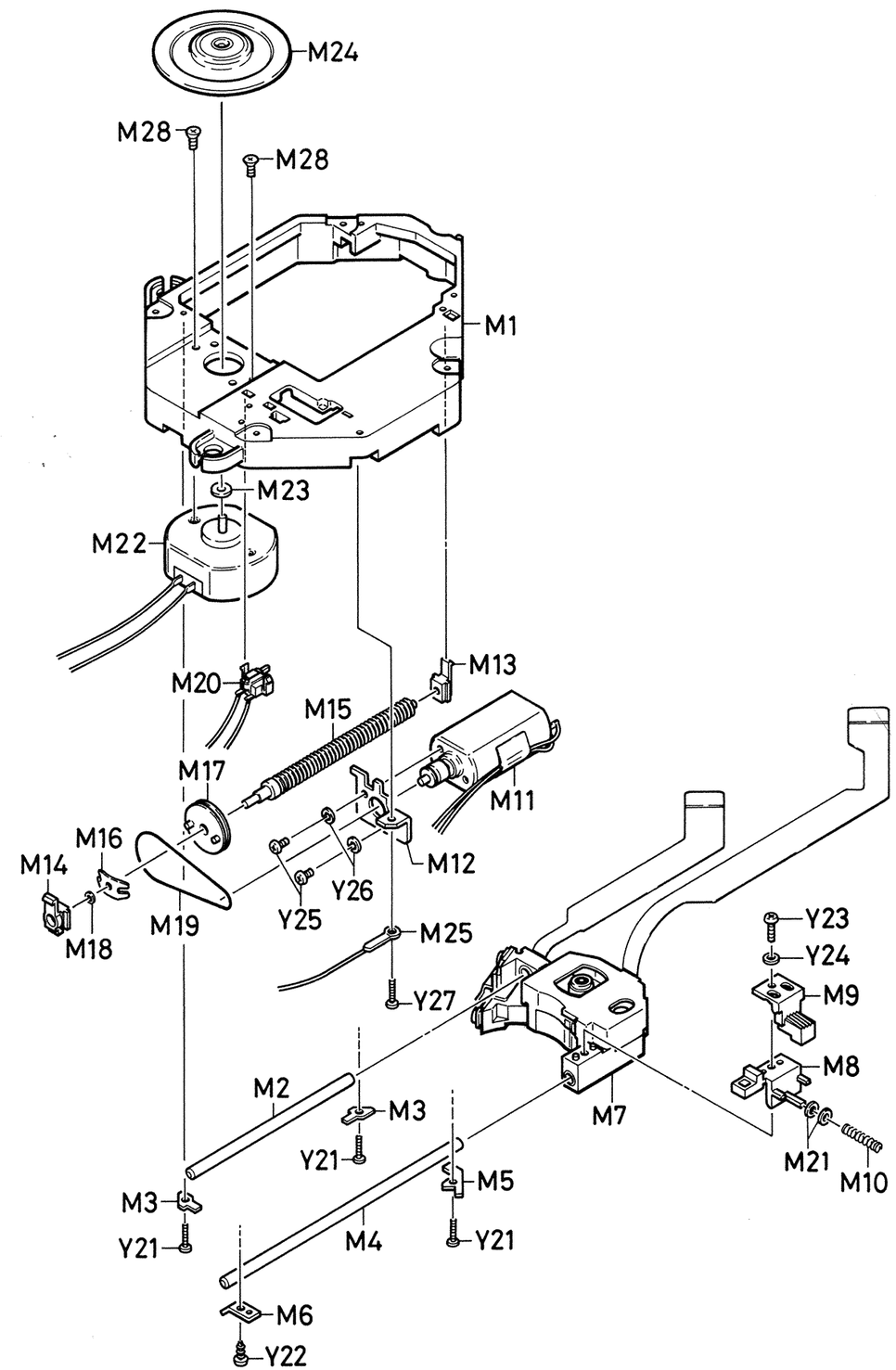

BLOCK DIAGRAM

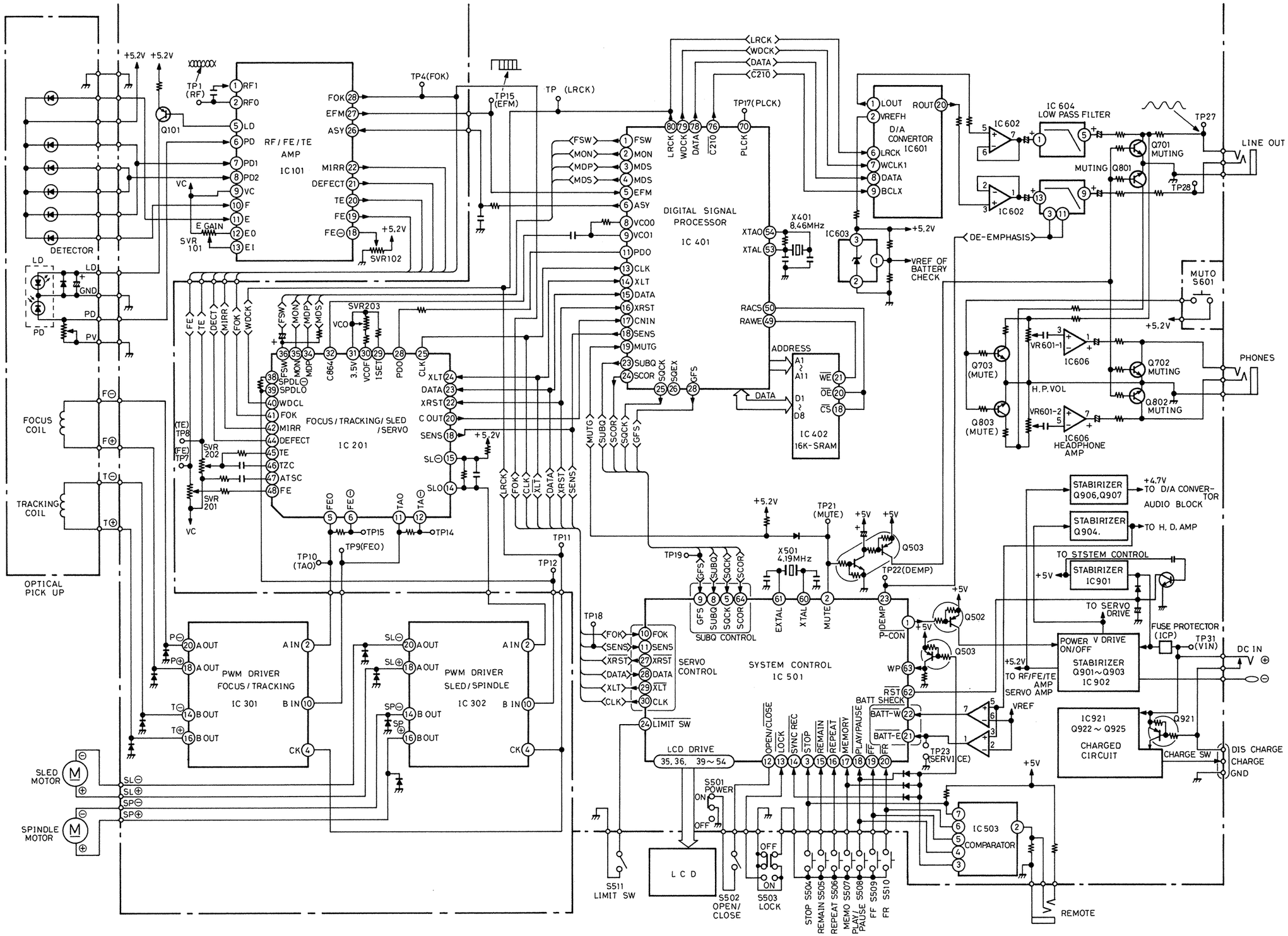

SCHEMATIC DIAGRAM (1/4)

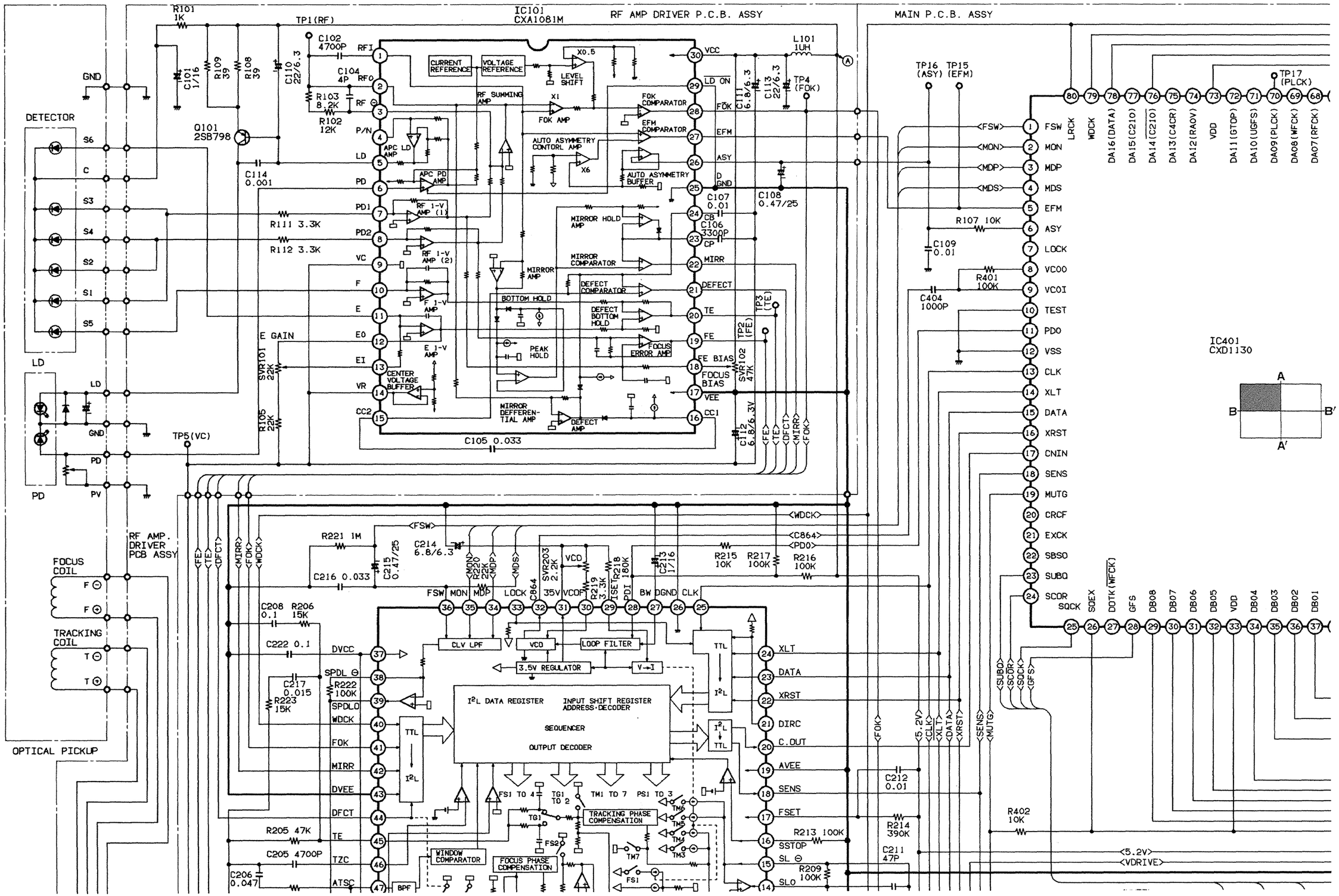

SCHEMATIC DIAGRAM (2/4)

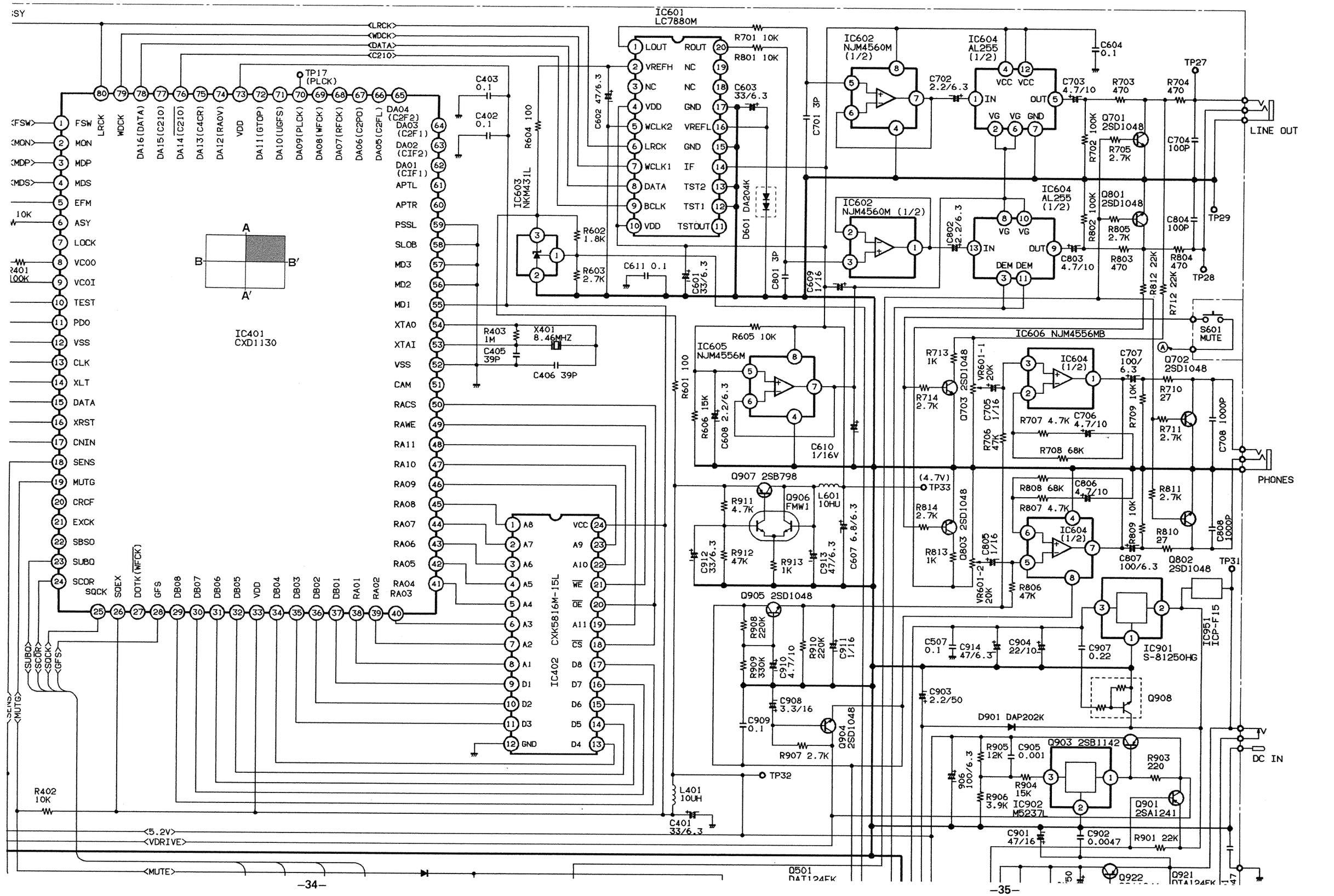

SCHEMATIC DIAGRAM (3/4)

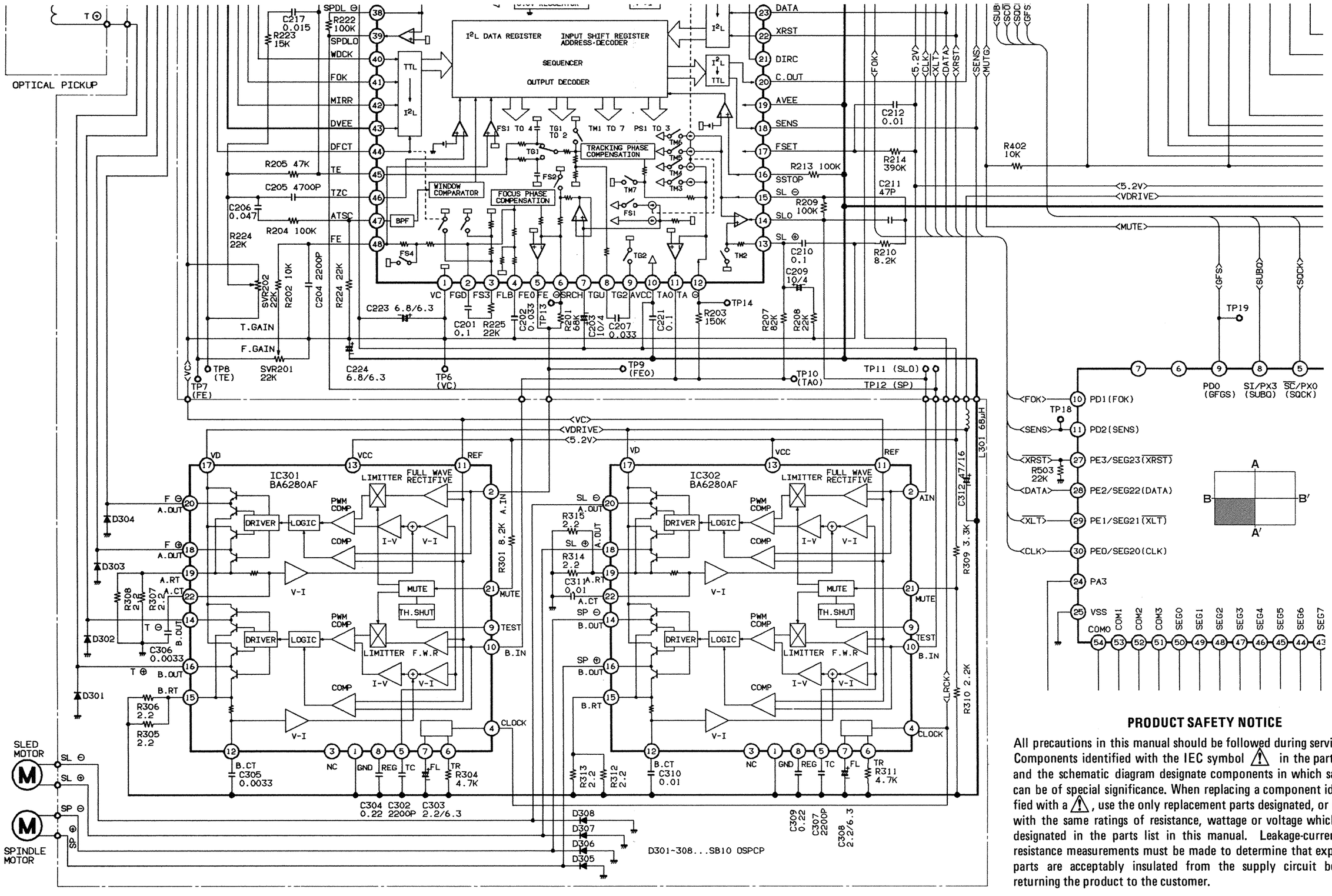

PRODUCT SAFETY NOTICE

All precautions in this manual should be followed during servicing. Components identified with the IEC symbol ⚠ in the parts list and the schematic diagram designate components in which safety can be of special significance. When replacing a component identified with a ⚠, use the only replacement parts designated, or parts with the same ratings of resistance, wattage or voltage which are designated in the parts list in this manual. Leakage-current or resistance measurements must be made to determine that exposed parts are acceptably insulated from the supply circuit before returning the product to the customer.

SCHEMATIC DIAGRAM (4/4)

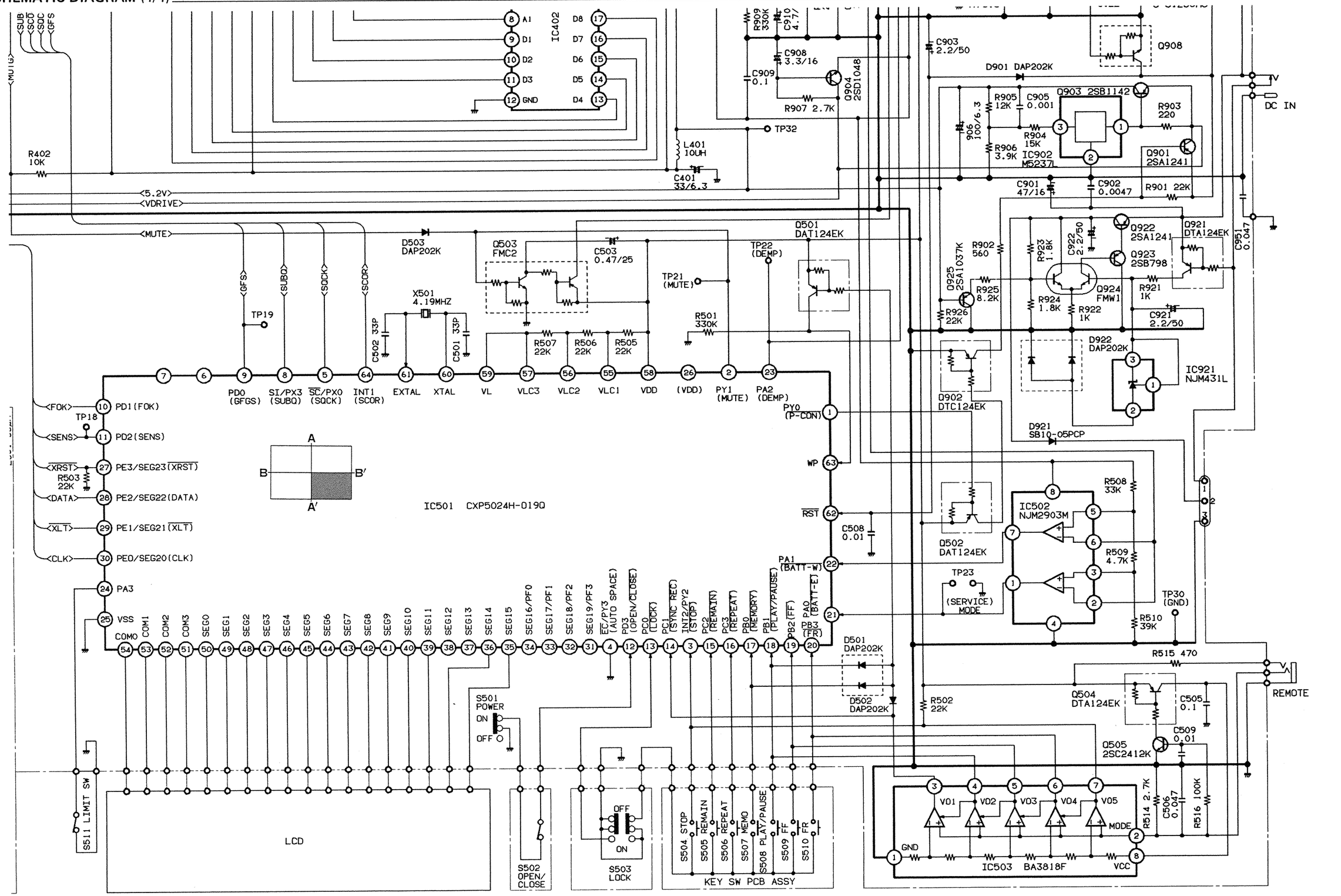

SCHEMATIC DIAGRAM & WIRING DIAGRAM (BATTERY)/WIRING DIAGRAM (MAIN)

HOLDER BATTERY

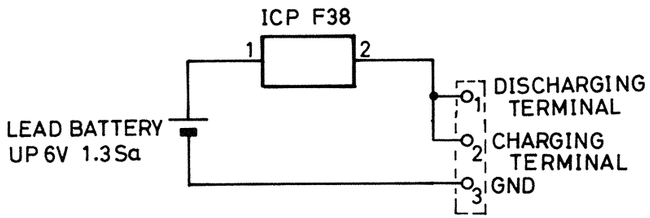

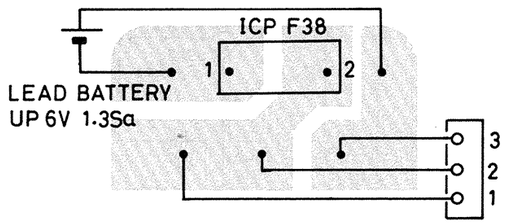

HOLDER BATTERY

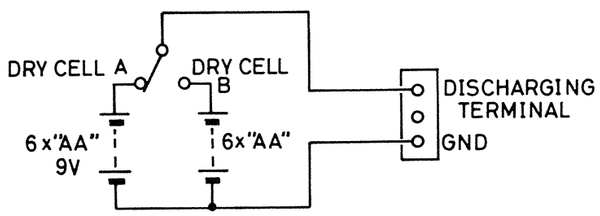

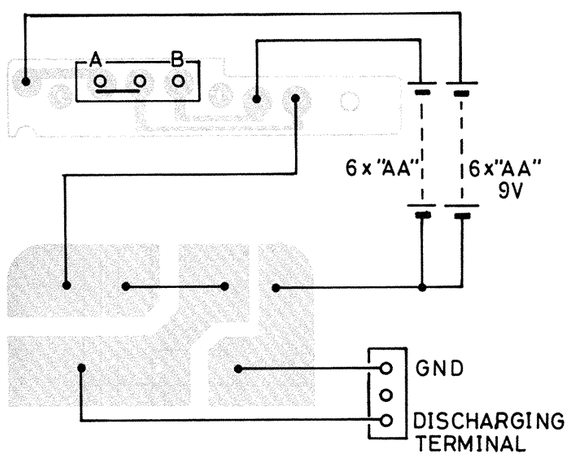

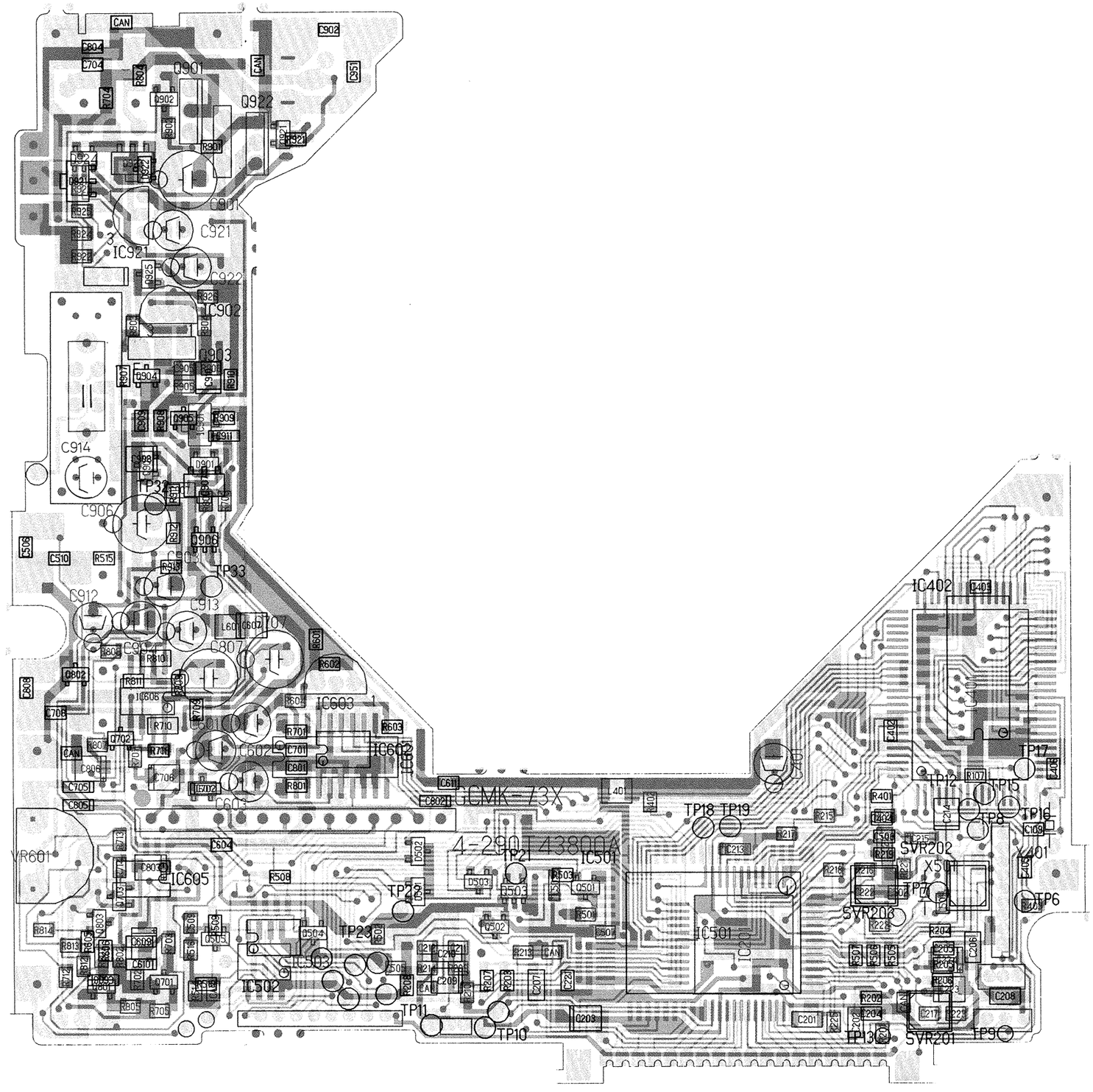

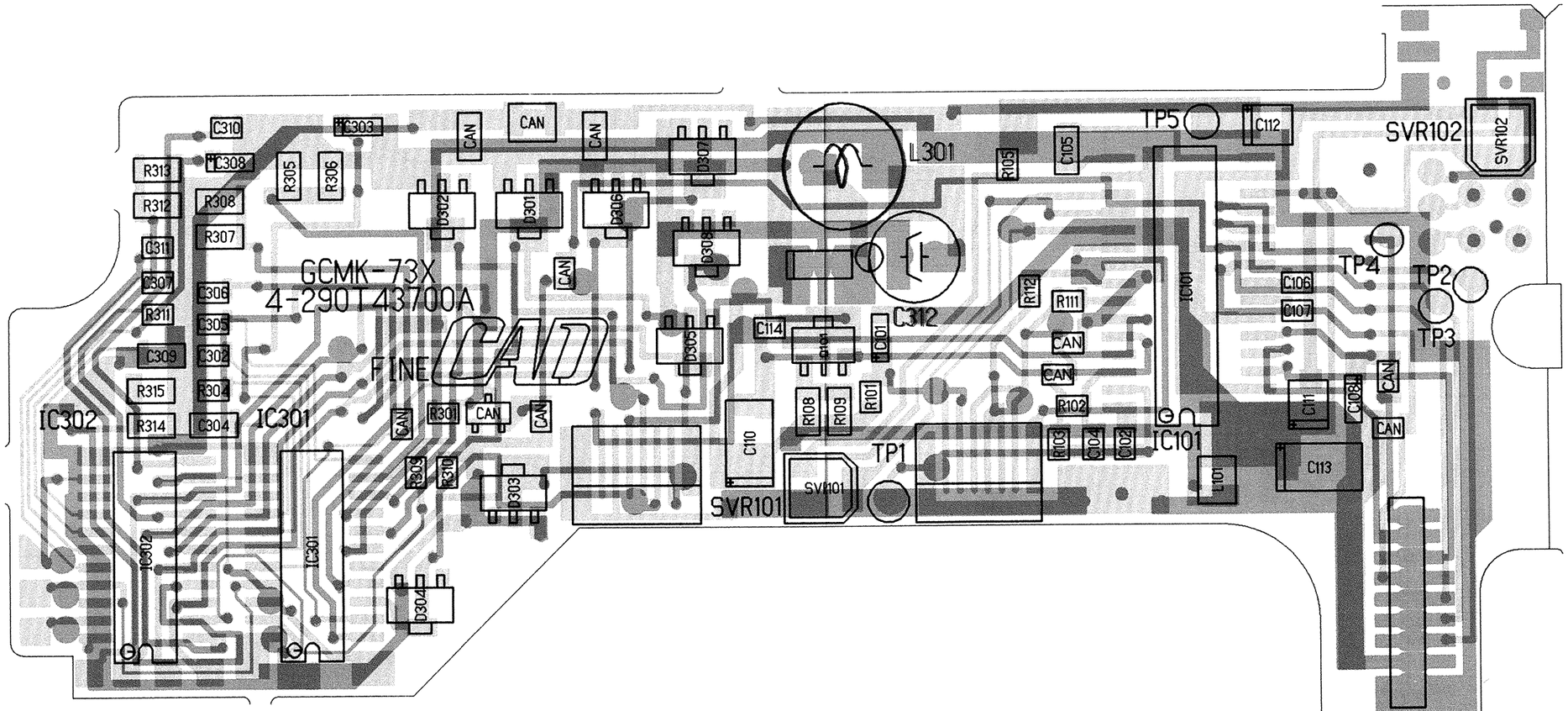
GCMK-73X
4-290T43700A
FINE CAD
IC302
IC301
IC101
L301
C312
TP1
TP2
TP3
TP4
TP5
SVR101
SVR102
CAN

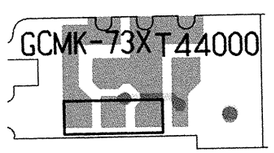
GCMK-73XT44000

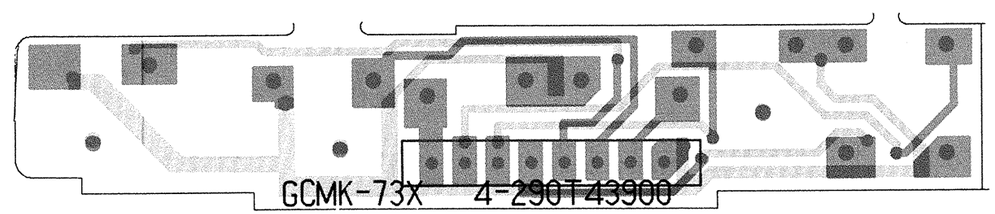
GCMK-73X 4-290T43900

WIRING CONNECTION DIAGRAM

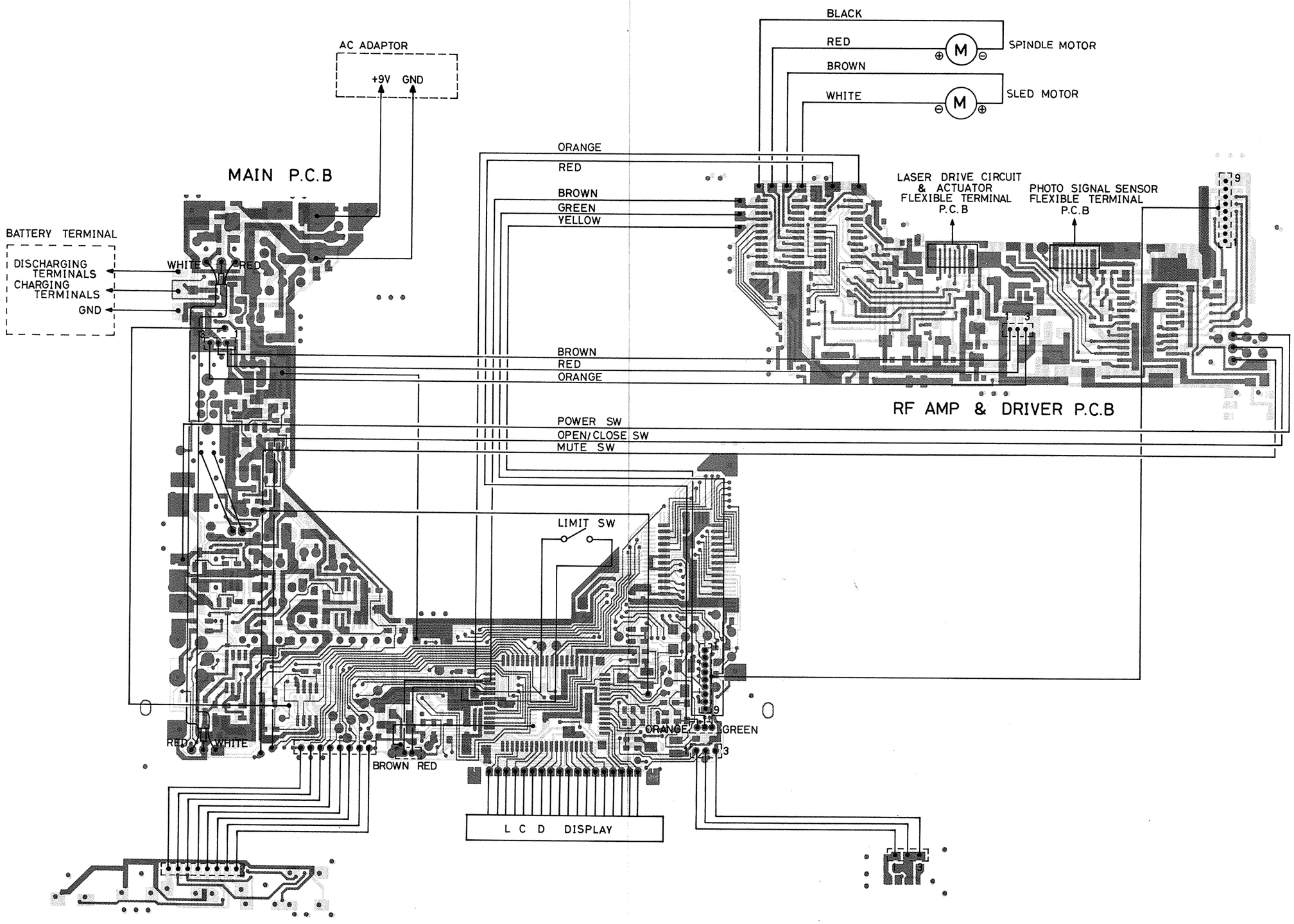

SANYO ELECTRIC TRADING CO., LTD.
33, Hiyoshi-cho 2-chome, Moriguchi-shi,
Osaka-ju, 570 Japan
Feb./'87/1000 HA Printed in Japan