733

TOSHIBA

COMPACT DISC PLAYER

XR-P20/XR-9457

T.C. Corp
10 North Main St
Wharton NJ 07885
www.servicemanuals.net

SPECIFICATIONS

Main Unit

Type:	Compact Disc player with optical pickup
No. of channels:	2 (stereo)
Frequency response:	5 Hz – 20 kHz, +0.5 dB – 1.5 dB
Dynamic range:	84 dB
Total harmonic distortion:	0.01% (1 kHz)
Channel separation:	75 dB (1 kHz)
Wow and flutter:	Unmeasurable
Output level:	Line out: 0.8V Phones: 0.6V (32 ohmios)
Pickup:	Semiconductor laser
Random access:	By track number
Power consumption:	1.2W (BU-200 Battery case)
Dimensions:	126(W) x 23.6(H) x 126(D) mm
Weight:	560 g

AC Adaptor

Output level:	DC 7V, 0.35A
Power supply:	AC 120V, 60 Hz (U.S.A./Canada) AC 220V, 50 Hz (Europe) AC 240V, 50 Hz (U.K./Australia) AC 110 – 127V/220 – 240V, 50/60 Hz (Others)
Power consumption:	15VA
Dimensions:	147(W)x68.2(H)x149.5(D)mm
Weight:	560 g

Battery Case

Power supply:	IEC LR6 ("AA" size) batteries x 4 (6 volts)
Weight:	50g (not included batteries)

Specifications are subject to change without notice.

XR-P20-VF: XR-9457-TA, TC, TE, TU, AY

PRINTED IN JAPAN 22905651 Jan., 1987 Ⓢ

CAUTION
USE OF CONTROLS OR ADJUSTMENTS OR PERFORMANCE OF PROCEDURES OTHER THAN THOSE SPECIFIED HEREIN MAY RESULT IN HAZARDOUS RADIATION EXPOSURE. DO NOT LOOK INTO THE OPTICAL LENS AT ANYTIME.

OBS! Apparaten innehåller laserkomponent som avger laserstrålning överstigande gränsen för laserklass 1.

"CLASS 1 LASER PRODUCT"

ADVARSEL

Denne mærkning er anbragt udvendigt på apparatet og indikerer, at appapatet arbejder med laserstråler af klasse 1, hvilket betyder, at der anvendes laserstråler at svageste klasse, og at man ikke på apparatets yderside kan blive udsat for utilladelig kraftig stråling.

APPARATET BOR KUN ÅBNES AF FAGFOLK MED SAERLIGT KENDSKAB TIL APPARATER MED LASERSTRÅLER!

ADVARSEL: USYNLIG LASERSTRÅLING VED ÅBNING, NÅR SIKKERHEDSAFBRYDER ER UDE AF FUNKTION. UNDGÅ UDSÆTTELSE FOR STRÅLING.

Indvendigt i apparatet er anbragt den her gengivne advarselsmærkning, som advarer imod at foretage sådanne indgreb i apparatet, at man kan komme til at udsætte sig for laserstråling.

Varoitus: Laite sisältää laserdiodin, joka lähettää näkymätöntä silmille vaarallista lasersäteilyä.

CAUTION: This equipment contains a laser diode which causes invisible laser radiation, which is dangerous to eyes.
Inside of the equipment, there is a warning marking of laser radiation.

"CLASS 1 LASER PRODUCT"

CAUTION: This model is classified as a "CLASS I LASER PRODUCT".

CLASS 1 LASER PRODUCT

RADIO INTERFERENCE REGULATIONS

THIS APPARATUS HAS BEEN PRODUCED TO COMPLY WITH "DIRECTIVE NO. 82/499/EEC".

CAUTION: Before returning the unit to the customer, check that the resistance between both blades of AC plug and any accessible metal parts is more than 3MΩ after completion of servicing, using the circuit tester. (U.S.A. model only)

OPERATING CONTROLS

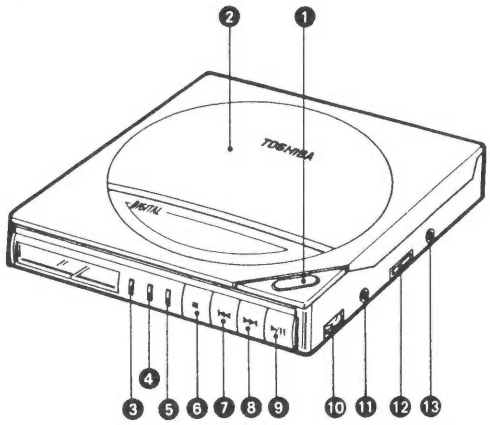

❶ Open Button [OPEN]

❷ Disc Cover

❸ Display Button [DISPLAY]

Use this button to switch between the following three display modes.

(1) Current track no.—Elapsed track playing time

(2) Remaining no. of tracks—Remaining disc playing time

(3) Programmed track no.—Program step no.

Note: Display mode (2) is not possible during memory disc play and display mode (3) is possible only during memory disc play.

❹ Repeat Button [REPEAT]

Press this button once to repeat mode. Press once again to release the repeat mode.

❺ Memory Button [MEMORY]

Press to memorize the desired tracks while in the stop mode. (Functions only in the stop mode.)

❻ Stop Button [■ STOP]

❼ Reverse Button [I◀◀ DOWN SKIP]

❽ Forward Button [▶▶I UP SKIP]

❾ Play/Pause Button [▶/❚❚ PLAY/PAUSE]

❿ Volume Control [VOLUME]

Volume control for the headphones connected to the headphones jack.

⓫ Headphones Jack [PHONES]

Connect headphones (not supplied with this player) having a 3.5 mm plug to this jack.

⓬ Remote Control Jack [REMOTE]

Plug in the supplied wired remote control unit.

⓭ Line Out Jack [LINE OUT]

This jack is used when connecting this player to an amplifier or stereo radio/cassette recorder using the supplied connection cable.

⓮ Power Switch [POWER]

⓯ Power Supply Terminal

Battery Case and AC Adaptor Receptacles

⓰ Pause Indicator [❚❚]

Lights when the pause mode is activated.

⓱ Display Mode Indicator [–]

Lights when the no. of remaining tracks are indicated.

⓲ Memory Indicator [M]

⓳ Track No. Indicator [TRACK NO.]

Shows either the number of the track currently being played or the remaining number of tracks in the disc.

⓴ Display Mode Indicator [–]

Lights when the remaining time is indicated.

㉑ Time Indicator [TIME]

Indicates the elapse time for each track. Indicates the program step no. during memory play.

㉒ Repeat Indicator [↻]

Lights during repeat disc play.

㉓ Battery Indicator [BATT]

Left Side

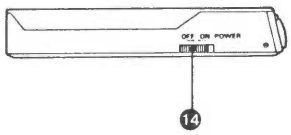

Rear

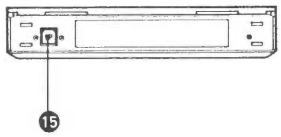

Display Panel

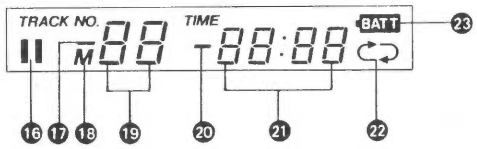

DISASSEMBLY INSTRUCTIONS

BOTTOM PLATE REMOVAL

1. Remove four mounting screws Ⓐ from bottom plate, and the bottom plate will be removed.

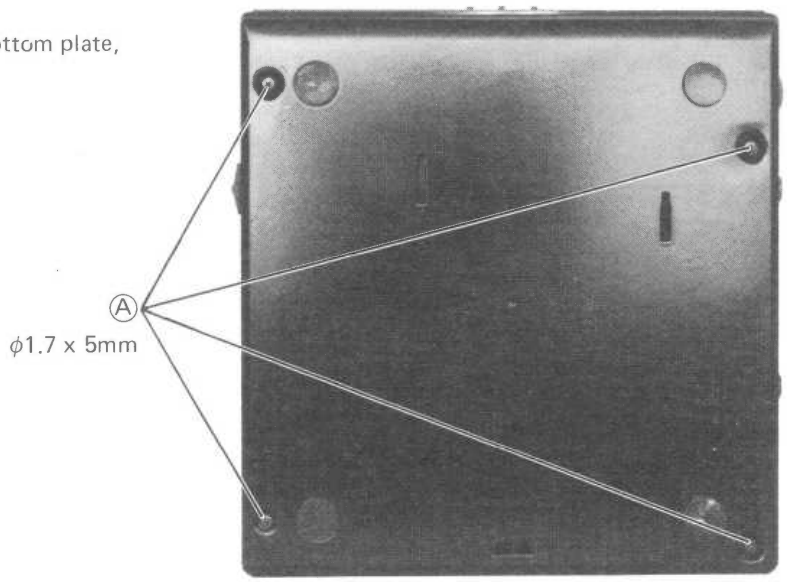

Figure 1

DISC COVER REMOVAL

1. Remove one lock arm screw Ⓑ from disc cover, and the disc cover will be opened.
2. Remove two screws Ⓒ from disc cover hinge, and the disc cover will be removed.

Figure 2

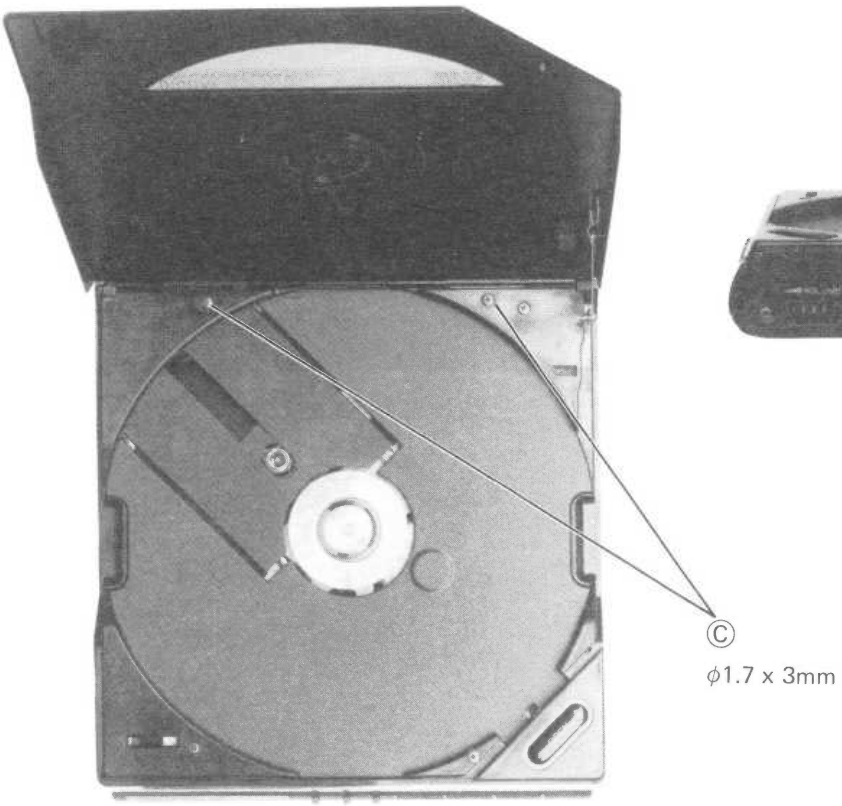

Figure 3

FRONT PANEL ASSEMBLY REMOVAL

1. Remove bottom plate.
2. Remove two screws Ⓓ from panel both sides, the front panel assembly will be removed.
   Note: Take care not to miss spring under play knob.

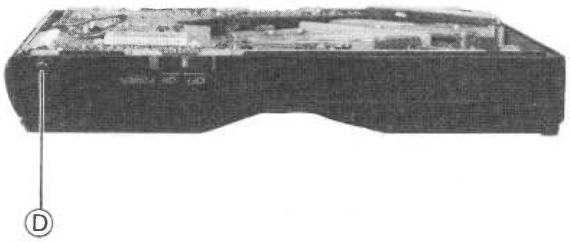

Figure 4

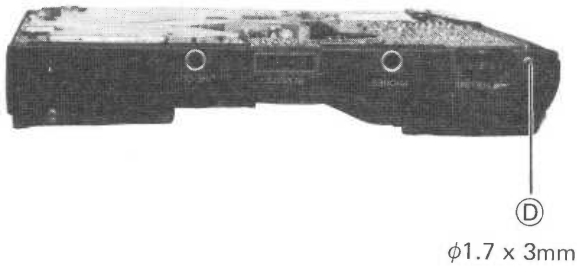

Figure 5

MOLD CABINET REMOVAL

1. Remove front panel assembly.
2. Remove three screws Ⓔ from mold cabinet and three screws Ⓕ and Ⓖ from rear side, and then the mold cabinet will be removed by pushing Ⓗ outside.

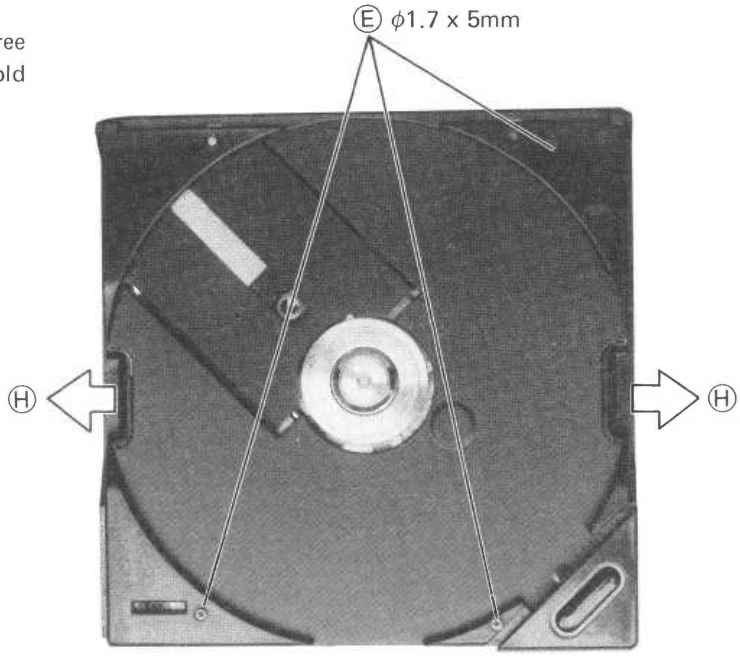

Figure 6

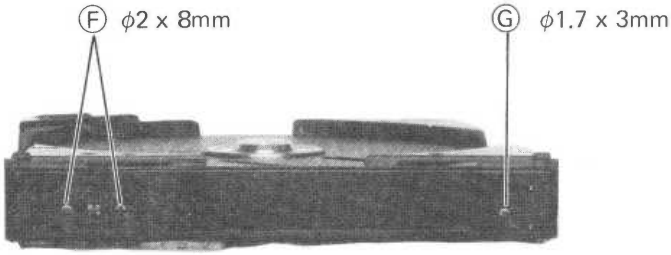

Figure 7

MAIN P.C. BOARD REMOVAL

1. Short-circuit laser pickup terminal Ⓘ by soldering iron.
2. Remove two screws Ⓙ from Key Switch P.C. Board, and the Key Switch P.C. Board will be removed.
3. Remove four connectors Ⓚ from Main P.C. Board and Sub P.C. Board, and the Main P.C. Board will be removed.
4. Push LCD holder metal fitting Ⓛ to the arrow direction slightly, and pull LCD side connector little by little.

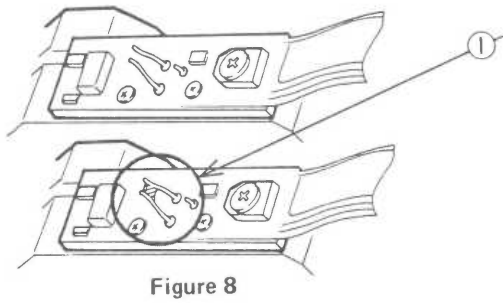

Figure 8

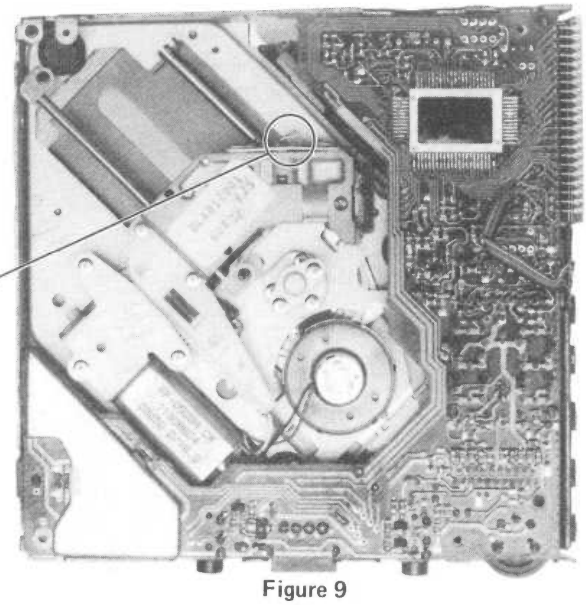

Figure 9

Ⓙ ϕ1.4 x 1.6mm

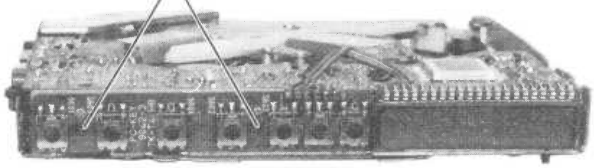

Figure 10

Ⓚ

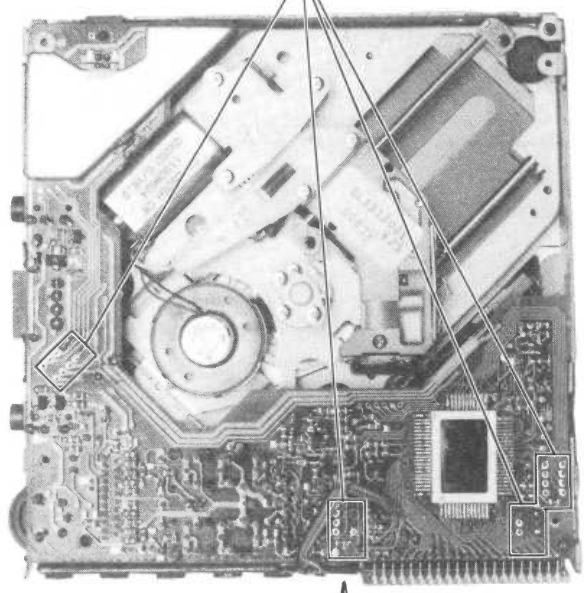

Figure 11

There is each connector under this.

Figure 12

* **CONNECTOR REMOVAL**

To remove connector insert ⊖ screw driver as illustrated and twist the blade left and right slightly to separate the connector from its receptacle.

Note: Take care not to break P.C. Board pattern.

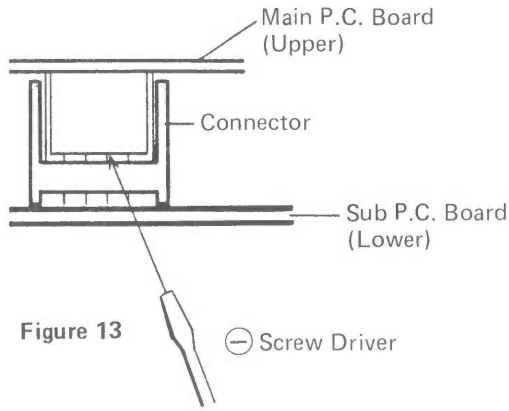

Figure 13

FLEXIBLE P.C. BOARD REMOVAL

1. Flexible P.C. Board is hooked by metal fitting. To remove the metal fitting, insert ⊖ driver (smallest size for watch) etc. and release lower hook.
2. Push both sides of Flexible P.C. Board socket, and the Flexible P.C. Board will be removed.

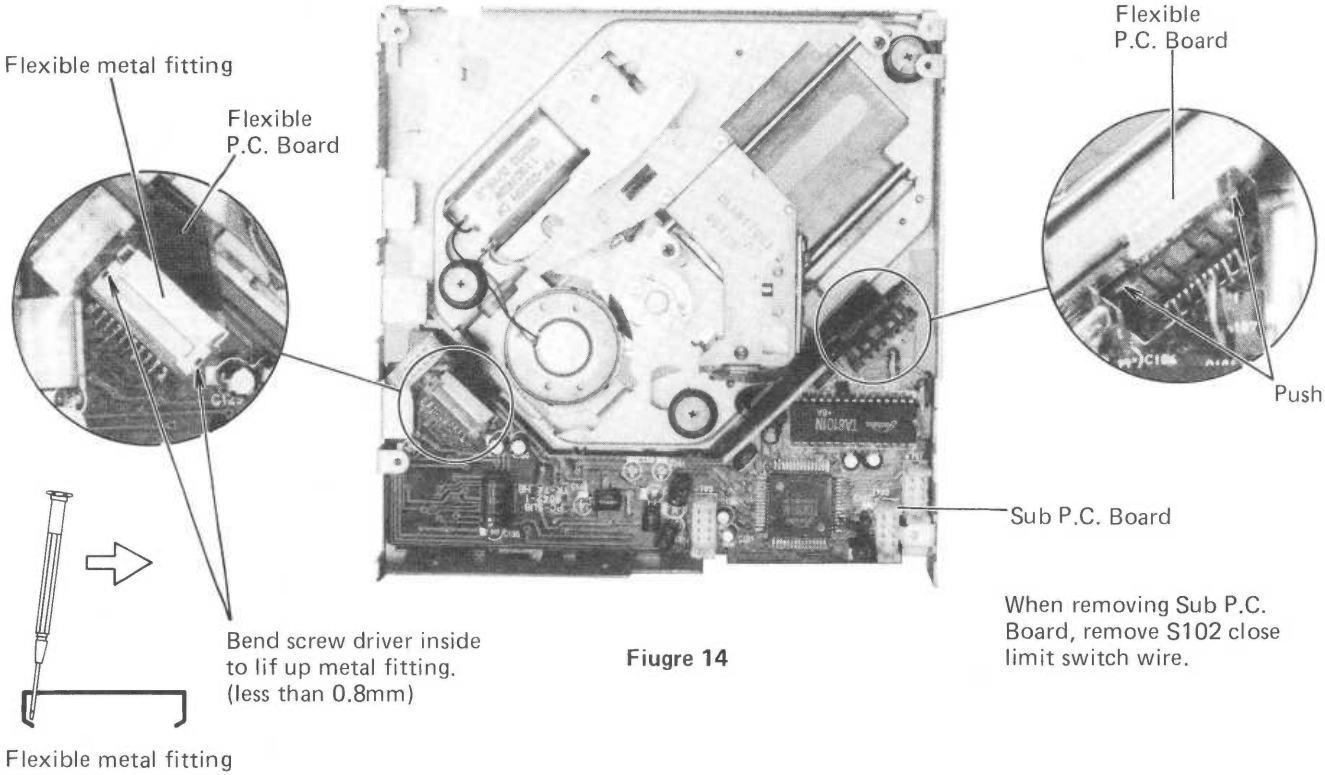

Fiugre 14

When removing Sub P.C. Board, remove S102 close limit switch wire.

DISC TABLE REMOVAL

1. Remove two screws Ⓜ from disc table metal fitting and one washer Ⓝ , and the disc table will be removed.

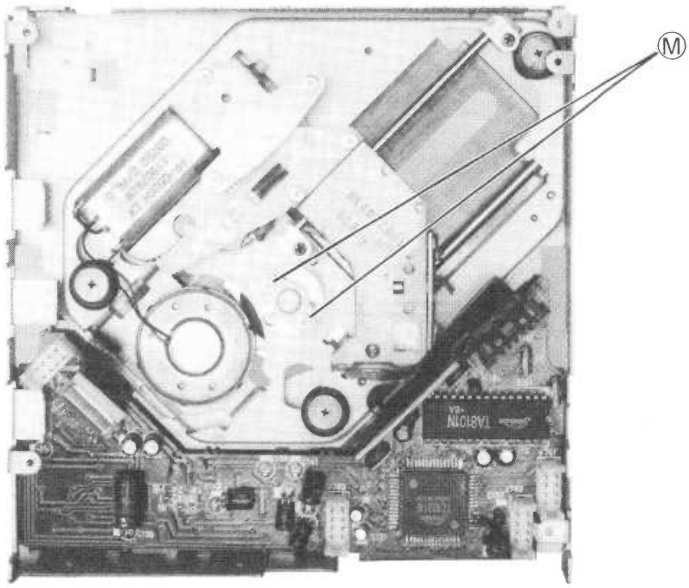

Figure 15

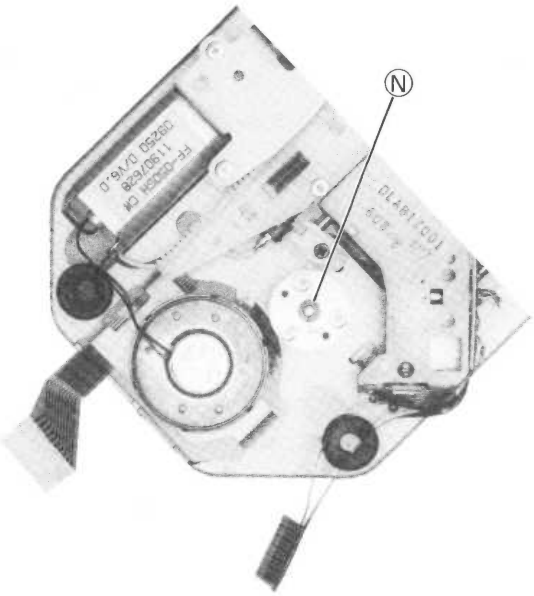

Figure 16

LASER PICKUP REMOVAL

1. Remove three screws Ⓞ from mechanism assembly.
2. Remove four screws Ⓟ from pickup cover, and the cover will be removed.

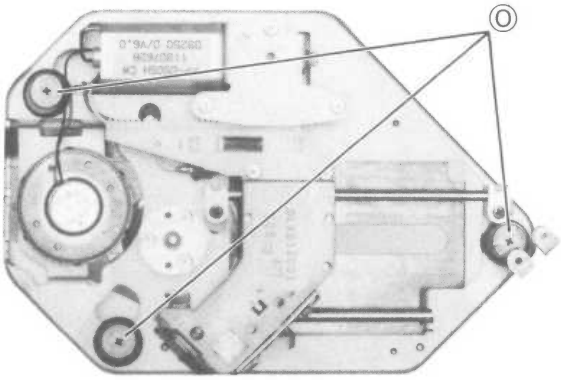

Figure 17

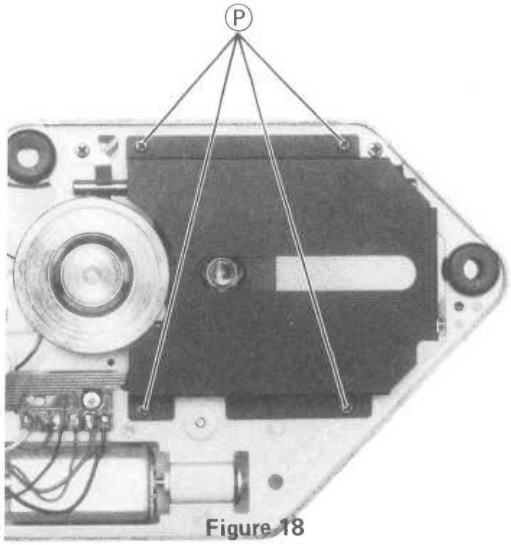

Figure 18

3. Remove two screws Ⓠ from rack gear and two screws Ⓡ from shaft holder.

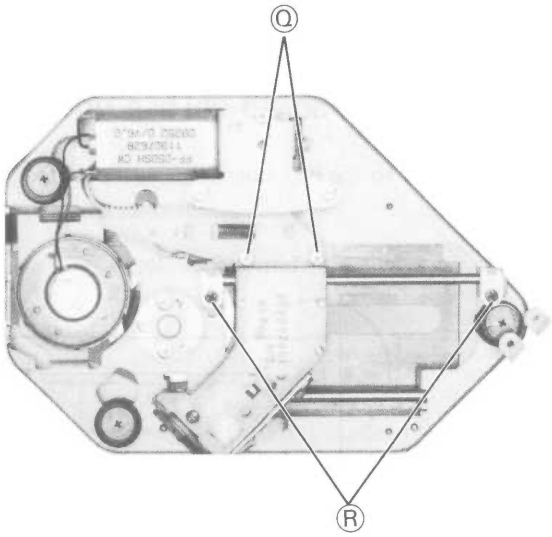

Figure 19

4. Remove two screws Ⓢ from shaft holder, move laser pickup outside, and move shaft tip Ⓣ slightly to the arrow direction. Remove shaft by swinging it left and right (Shaft cannot be moved vertically to chassis), and the laser pickup will be removed.

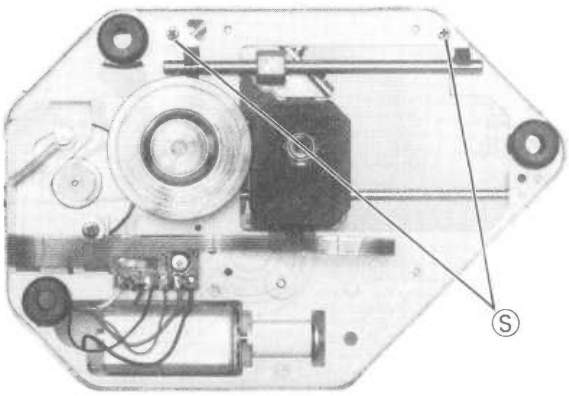

Figure 20

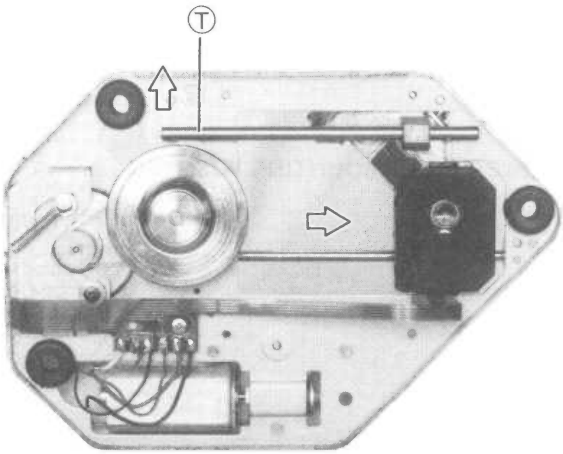

Figure 21

Note: Take care of Flexible P.C. Board attached to laser pickup.

AC ADAPTOR (TAC-200)

TOP COVER REMOVAL

Remove four screws Ⓐ , and the Top Cover will be removed.

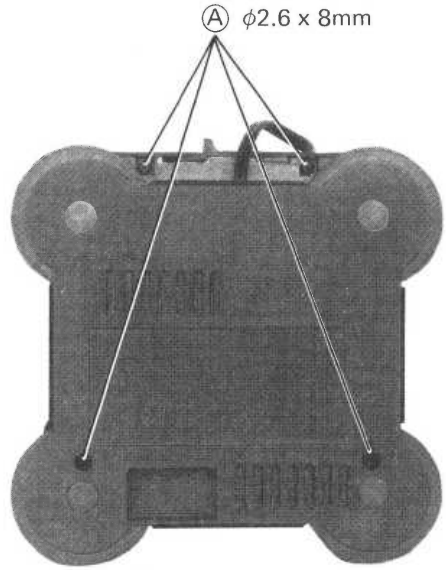

Figure 22

TRANSFORMER P.C. BOARD HOLDER MOUNTING POSITION

Mount the holder to the P.C. Board side as illustrated.

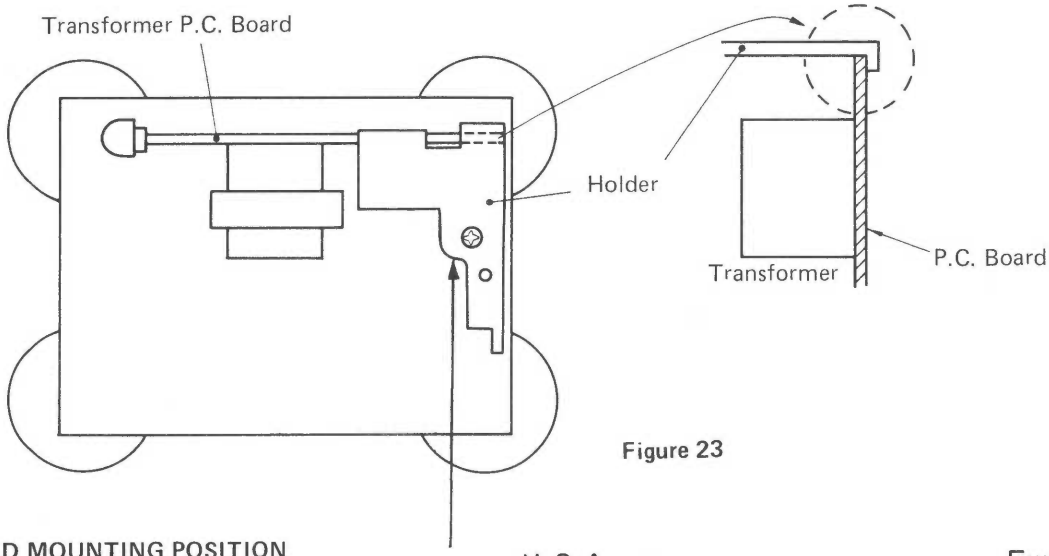

Figure 23

■ **POWER CORD MOUNTING POSITION**

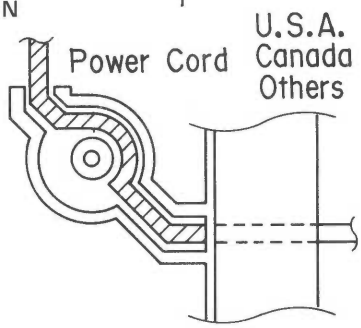

Figure 24

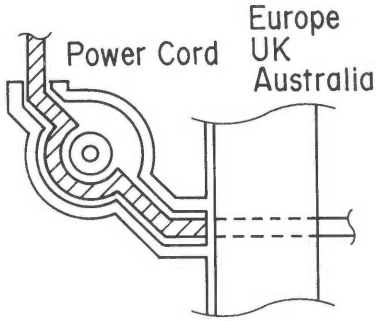

Figure 25

ADJUSTMENTS

★ **When removing Main P.C. Board and Sub P.C. Board, remove close limit switch S102 leads at switch side and solder the two leads to short-circuit until adjustments are completed. (If not done, the unit cannot be set to play mode without disc cover.) (Figure 29)**

1. LASER POWER COARSE ADJUSTMENT

Remove Main P.C. Board and Sub P.C. Board from chassis.

★ Make the adjustment before mounting pickup on mechanism.

(1) Cut LDC circuit pattern located in upper side of Main P.C. Board connector J704 . (Figure 26)

(2) Insert pickup Flexible P.C. Board into Sub P.C. Board socket.

(3) Remove pickup shorting pin with soldering iron.

(4) Connect DC power supply and turn power switch S701 ON.

(5) Adjust so that meter deviation becomes 160μW by turning pickup VR1 with laser power meter sensor section applied to pickup lens.

★ VR1 has no stopper. Its service part is set to MIN position. Adjust it by turning it clockwise

(6) After the coarse adjustment is completed, short-circuit pickup shorting pins by soldering them. Remove resist around the pattern cut in item (1) and solder the pattern ends.

(7) After pickup and P.C. Boards mounting to chassis is completed, remove pickup shorting pin by soldering iron.

2. TRACKING ERROR BALANCE ADJUSTMENT

(1) Remove clamper by removing three screws from clamper holder. (It will be used for holding disc.)

(2) Make test terminals on J706 as illustrated. (Connect leads as TP terminals are too short.)

(3) Connect TE and VREF test terminal to oscilloscope.

(4) Turn power switch S701 ON. Play back test disc YEDS-7 and search first piece.

(5) Adjust so that waveform center displayed on oscilloscope is located at 0V ±10mV by R107 (100K ohm) TE BAL VR.

★ When tracking error signal stops, adjust by repeating search operation.

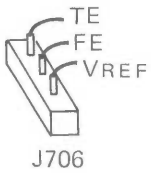

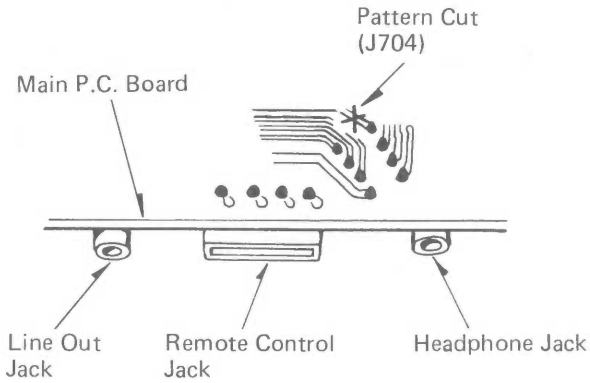

Figure 26

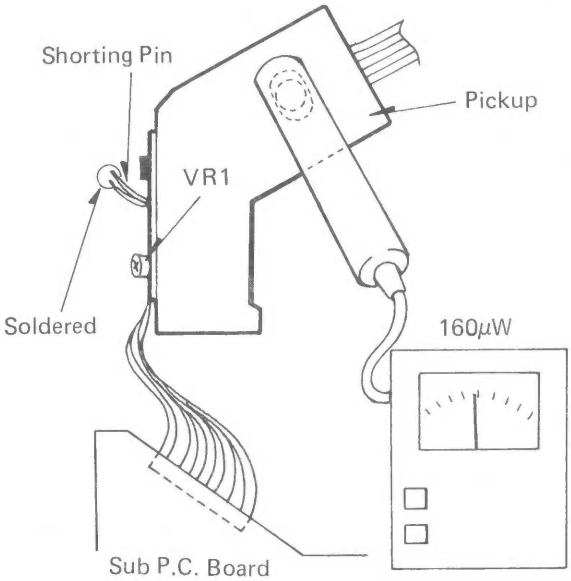

Figure 27

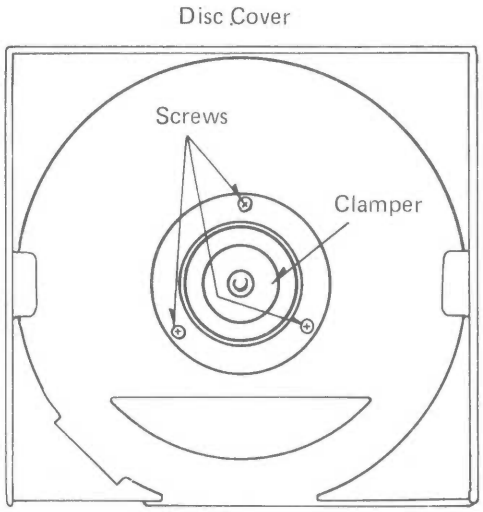

Figure 28

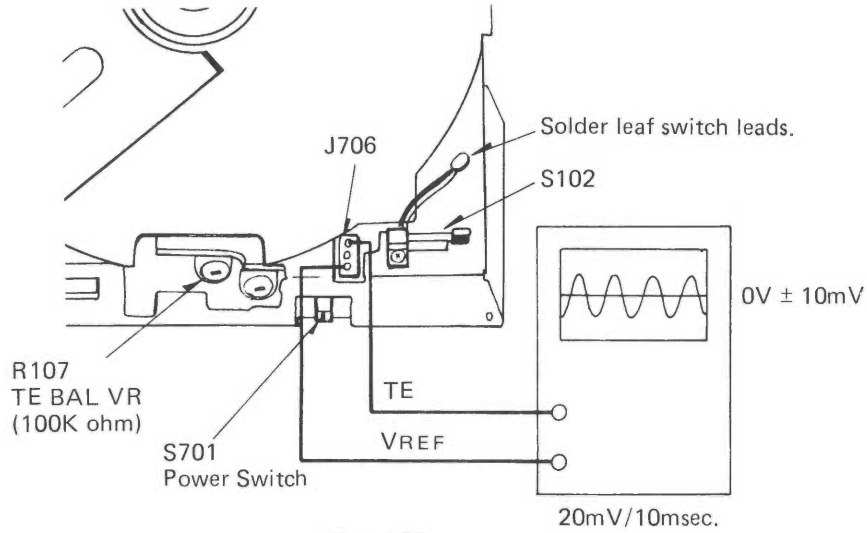

Figure 29

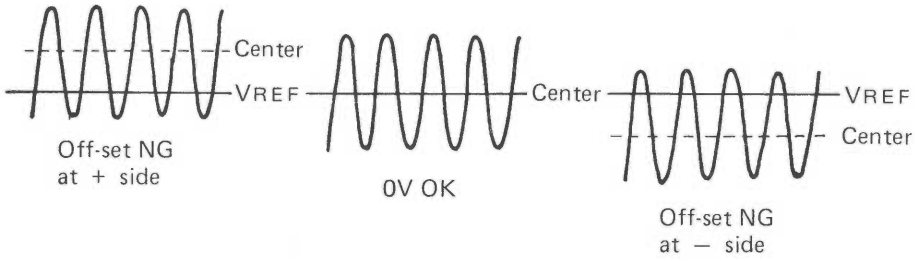

Figure 30

3. FOCUS ERROR BALANCE ADJUSTMENT

(1) Connect oscilloscope to J706 test terminal as shown in Figure 31.

(2) Play back test disc YEDS-7 and adjust so that RF signal (eye pattern) 3T waveform obtains maximum by turning R115 FE BAL VR.

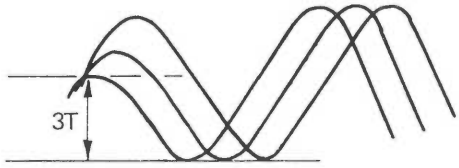

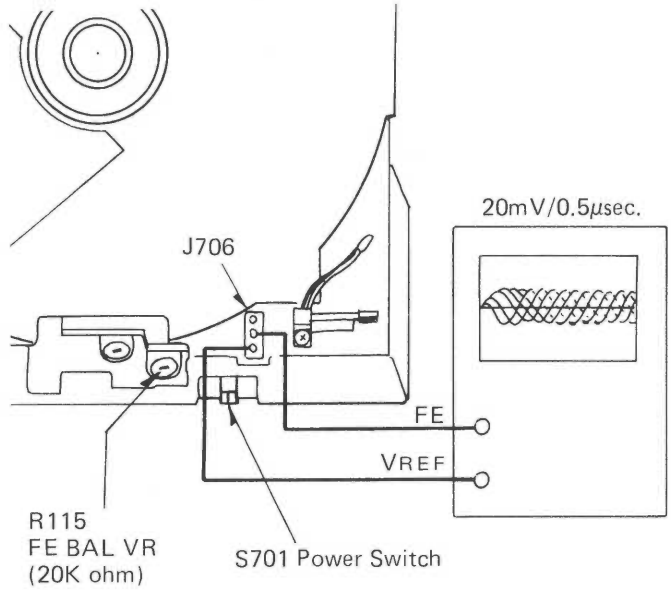

Figure 31

4. LASER POWER FINE ADJUSTMENT

(1) After "FOCUS ERROR BALANCE ADJUSTMENT" in section 3 is completed, play back from the 36th track on with test disc YEDS-7 loaded. (Laser pickup will move to outside.)

(2) Adjust so that RF signal obtains 1Vp-p by turning pickup laser power adjustment VR (VR1).

5. TRACKING ERROR BALANCE FINE ADJUSTMENT

Repeat tracking error balance fine adjustment described in section 2.

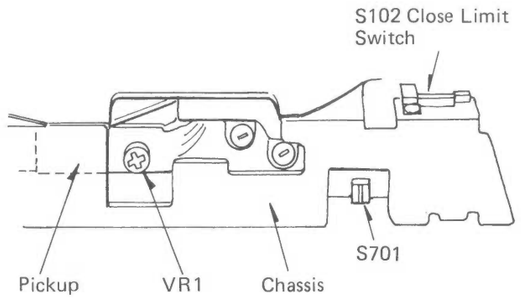

Figure 32

★ For tracks from 36th on Figure 6. VR position matches adjustment hole.

6. OTHER ADJUSTMENTS (TRACKING, FOCUS OFF-SET)

Make the adjustments if Q101 TA8101N (servo IC) is replaced. When pickup is replacement, the adjustments are not necessary.

★ Perform the adjustments with the P.C. Board assembly unit not mounted on the mechanism assembly.

★ Make test terminal at FEOF, TEOF and VREF of J706.

☆ **FOCUS OFF-SET ADJUSTMENT**

(1) Connect pin 28 of Q101 and VREF terminal to oscilloscope.

(2) Turn power switch S701 on.
Adjust so that 0 ±10mV is obtained by turning R116 100K ohm FEOF VR.

☆ **TRACKING OFF-SET ADJUSTMENT**

(1) Connect J706 TE terminal and VREF terminal to oscilloscope.

(2) Turn power switch S701 on.
Adjust so that 0 ±10mV is obtained by turning R119 100K ohm TEOF.

★ When 0V adjustment is made with tester, adjust with 10K ohm and 1μF inserted as illustrated. (for noise cutting)

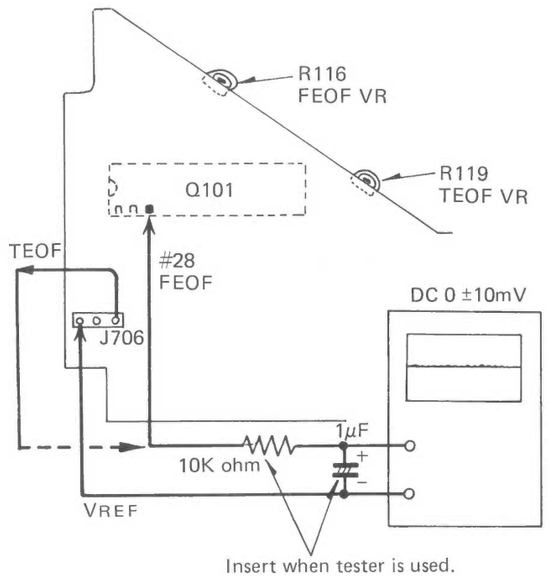

Figure 33

ELECTRICAL PARTS LOCATIONS
AC ADAPTOR (TAC-200)

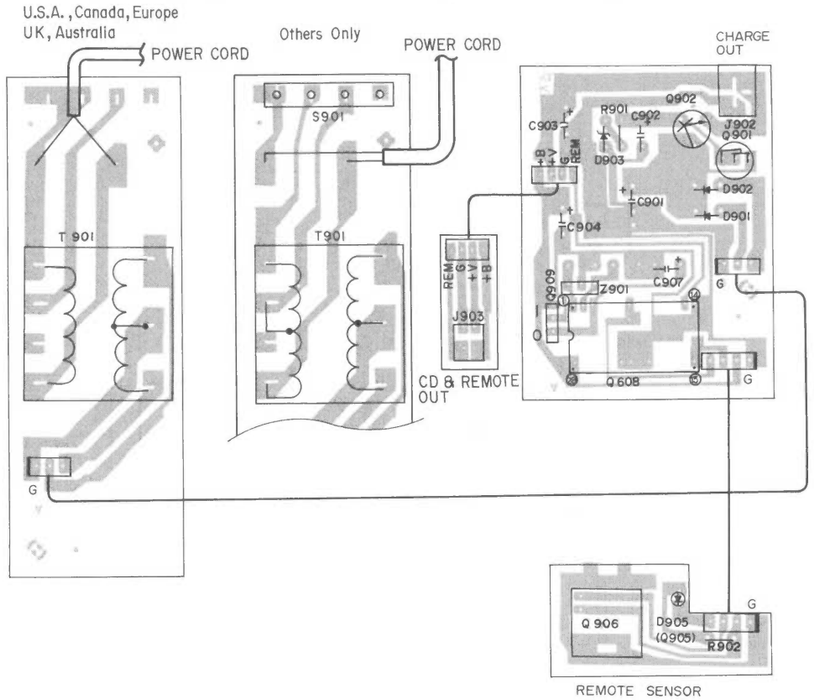

SCHEMATIC DIAGRAM
REMOTE CONTROL UNIT (RM-200)

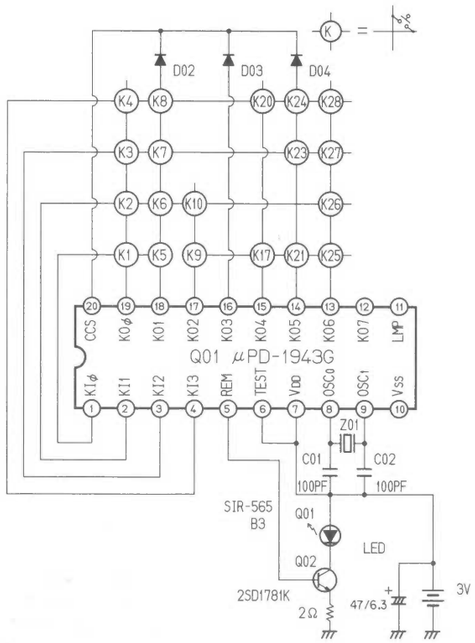

Key No.	Key Operation
K1	0
K2	1
K3	2
K4	3
K5	4
K6	5
K7	6
K8	7
K9	8
K10	9
K17	PLAY/PAUSE
K20	STOP/CLEAR
K21	MEMORY
K23	REPEAT
K24	DISPLAY
K25	FF
K26	REV
K27	UP
K28	DOWN

ELECTRICAL PARTS LOCATIONS

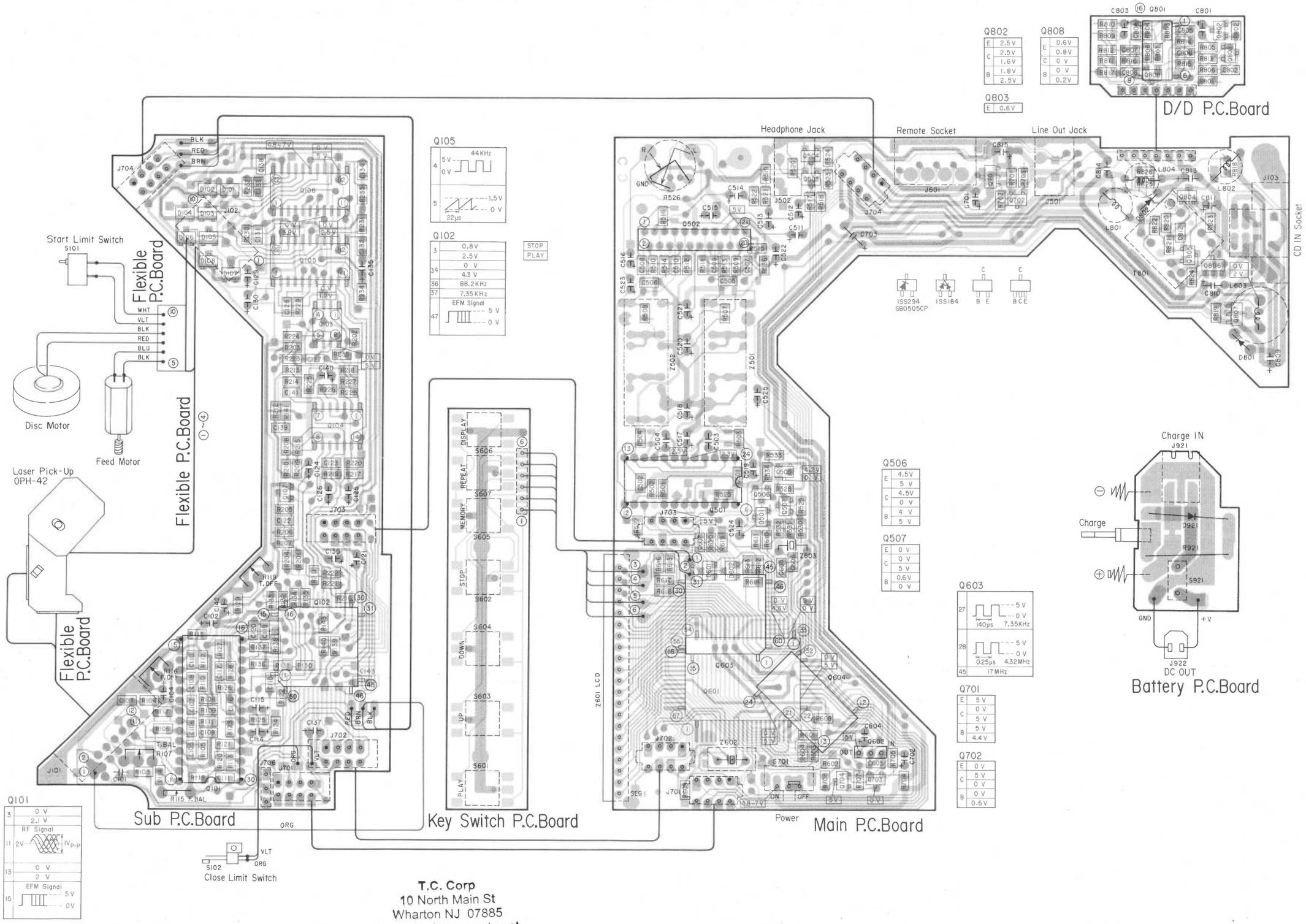

T.C. Corp
10 North Main St
Wharton NJ 07885
www.servicemanuals.net

SCHEMATIC DIAGRAM

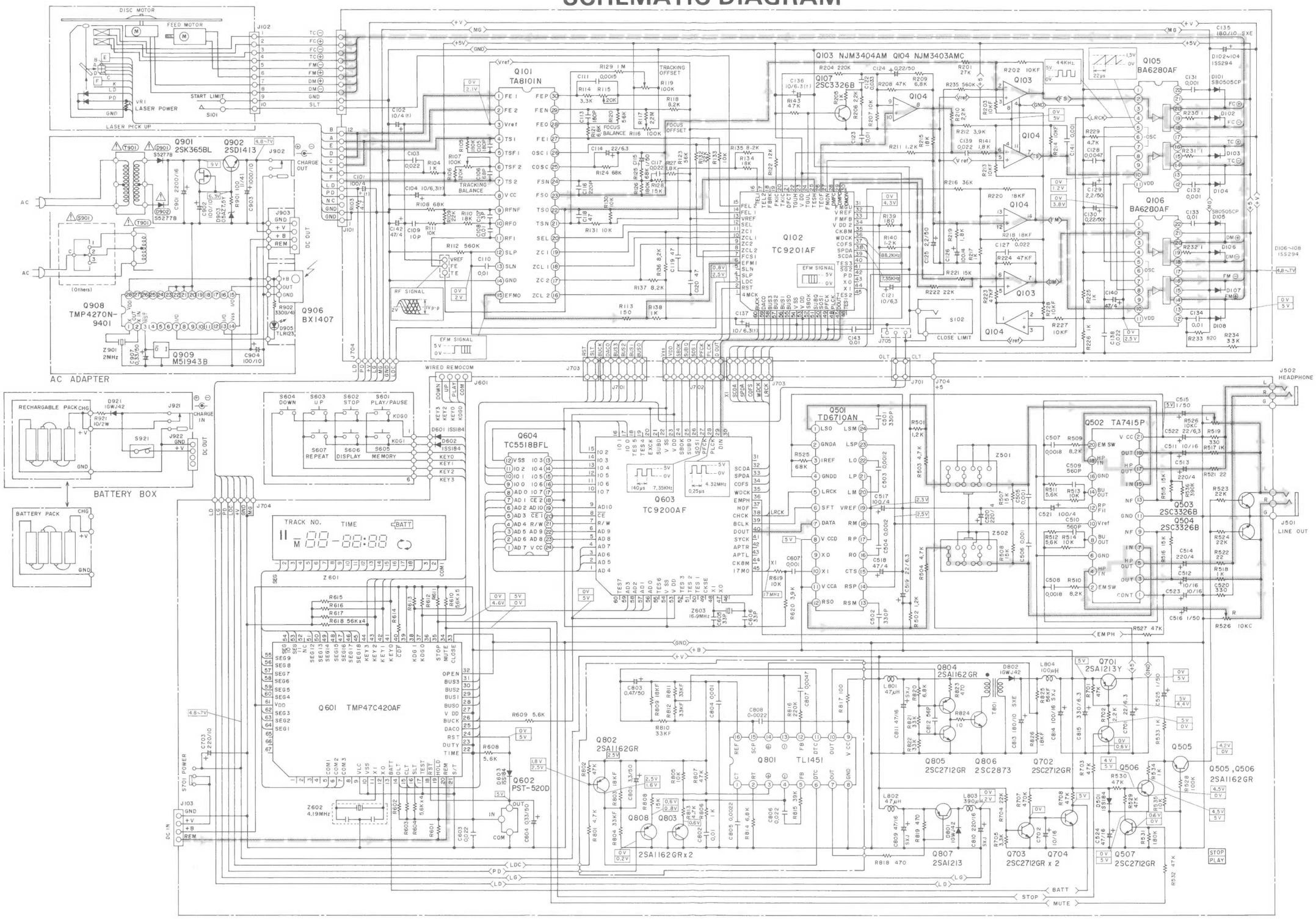

CAUTION:
The ⚠ mark, the symbol No. circled with oval in the schematic diagram and the shaded area in the parts list designate components which have special characteristics important for safety and should be replaced only with types identical to those in the original circuit or specified in the parts list.

MECHANISM EXPLODED VIEW

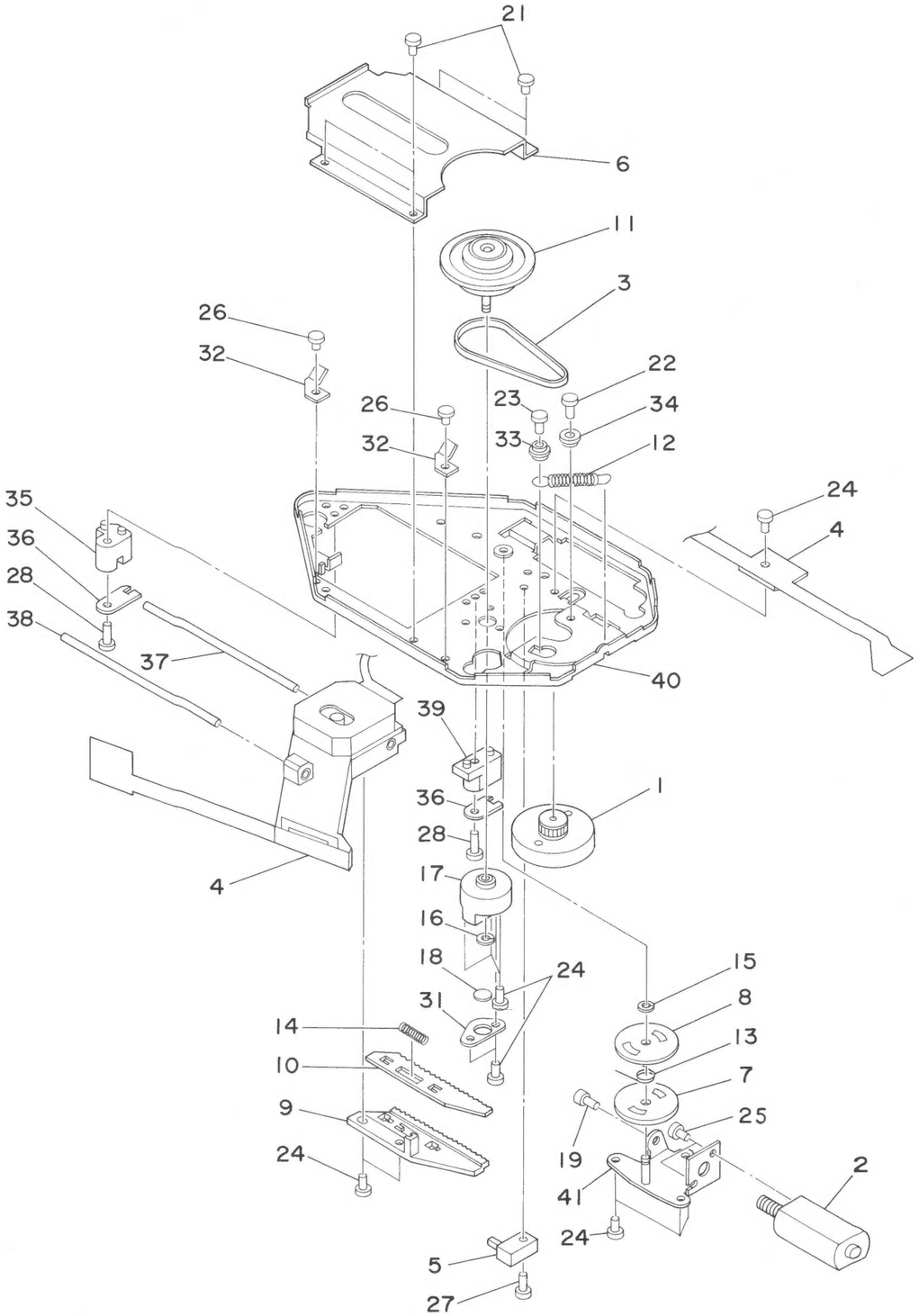

NOTE: Parts excluded in the parts list are not stocked since they are seldom required for routine service. Some delay should be anticipated when ordering these items.

EXPLODED VIEW PARTS LIST

Location No.	Part No.	Description
	MECHANISM PARTS	
1	25792257	Disc Motor Ass'y
2	25792258	Feed Motor Ass'y
3	25759092	Timing Belt
4	22155242	Laser Pick-up, OPH-42
5	22196844	Push Switch
6	20743200	Pick-up Cover
7	20727198	Feed Gear, A
8	20727199	Feed Gear, B
9	20727200	Rack Gear, A
10	20727201	Rack Gear, B
11	20721115	Disc Table Ass'y
12	25776996	Spring
13	25778450	Spring, Feed Gear
14	25777632	Spring, Rack Gear
15	25766284	Washer, ϕ1.5
16	25766050	Washer, ϕ1.6
17	20771056	Holder Ass'y
18	25766356	Thrust Washer
19	20776149	Thrust Screw
21	22708175	Screw, ϕ1.7 x 1.4mm, PAN BLK
22	22708310	Screw, ϕ1.7 x 3.5mm, PAN Chrome
23	22708621	Screw, ϕ1.7 x 4.5mm, PAN BLK
24	22708028	Screw, ϕ1.7 x 4.0mm, PAN Chrome
25	22708336	Screw, ϕ2.0 x 2.2mm, PAN BLK
26	22708647	Screw, ϕ2.0 x 1.5mm, PAN BLK
27	22708871	Screw, ϕ2.0 x 5.0mm, PAN BLK
28	22707715	Screw, ϕ2.0 x 8.0mm, PAN BLK
	CABINET PARTS	
301	22829021	Front Panel Ass'y
302	20823413	Disc Cover Ass'y (XR-9457)
302	20823412	Disc Cover Ass'y (XR-P20)
303	22881471	Mold Cabinet
304	22838258	Decoration Tray
305	22885024	Knob, Open
306	22885028	Knob, Power
307	22885027	Knob, Stop
308	22885031	Knob, Down

Location No.	Part No.	Description
309	22885030	Knob, Up
310	22885026	Knob, Play
311	22885025	Knob, Volume
312	20832039	Holder, Knob Open
313	20754322	Clamper Ass'y
314	20024338	Clamper Ring
315	20024339	Hing, Disc Cover
316	20024320	Lock Arm
317	20754308	Lock Lever
318	22766317	Tray Tape
319	20792052	Washer
320	25777626	Spring
321	25777627	Spring
322	25779640	Spring
323	25779642	Spring
324	20015571	Bottom Plate Ass'y
325	22907360	Caution Label, Lens
326	25809773	Name Label (U.S.A)
326	25809774	Name Label (Canada)
326	25809775	Name Label (Europe)
326	25809776	Name Label (UK)
326	25809777	Name Label (Australia)
326	25809778	Name Label (Others)
327	22746248	Click Pin
328	25761554	Cushion
329	25735259	E Ring, ϕ1.2
330	22707967	Screw, ϕ1.4 x 1.2mm, PAN BLK
331	22708218	Screw, ϕ1.4 x 1.6mm, PAN BLK
332	22708795	Screw, ϕ1.4 x 3.2mm, Special
333	22708091	Screw, ϕ1.4 x 4.0mm, PAN BLK
334	22708403	Screw, ϕ1.7 x 3.0mm, PAN BLK
335	22708794	Screw, ϕ1.7 x 4.0mm, Special
336	22708095	Screw, ϕ1.7 x 5.0mm, PAN FLT
337	22707687	Screw, ϕ2 x 8.0mm
338	25766395	Washer, ϕ4.1, t0.2
339	25766396	Washer, ϕ4.1, t0.4
341	25766374	Washer, ϕ1.6, t0.1
361	22906499	Laser Label (Europe, UK, Australia)
362	22900619	Caution Label (U.S.A)
362	22906500	Caution Label, Class-1 (Europe, Australia)
362	22907154	Caution Label, C1 (UK)
363	22906585	Laser Label (Europe)

CABINET EXPLODED VIEW

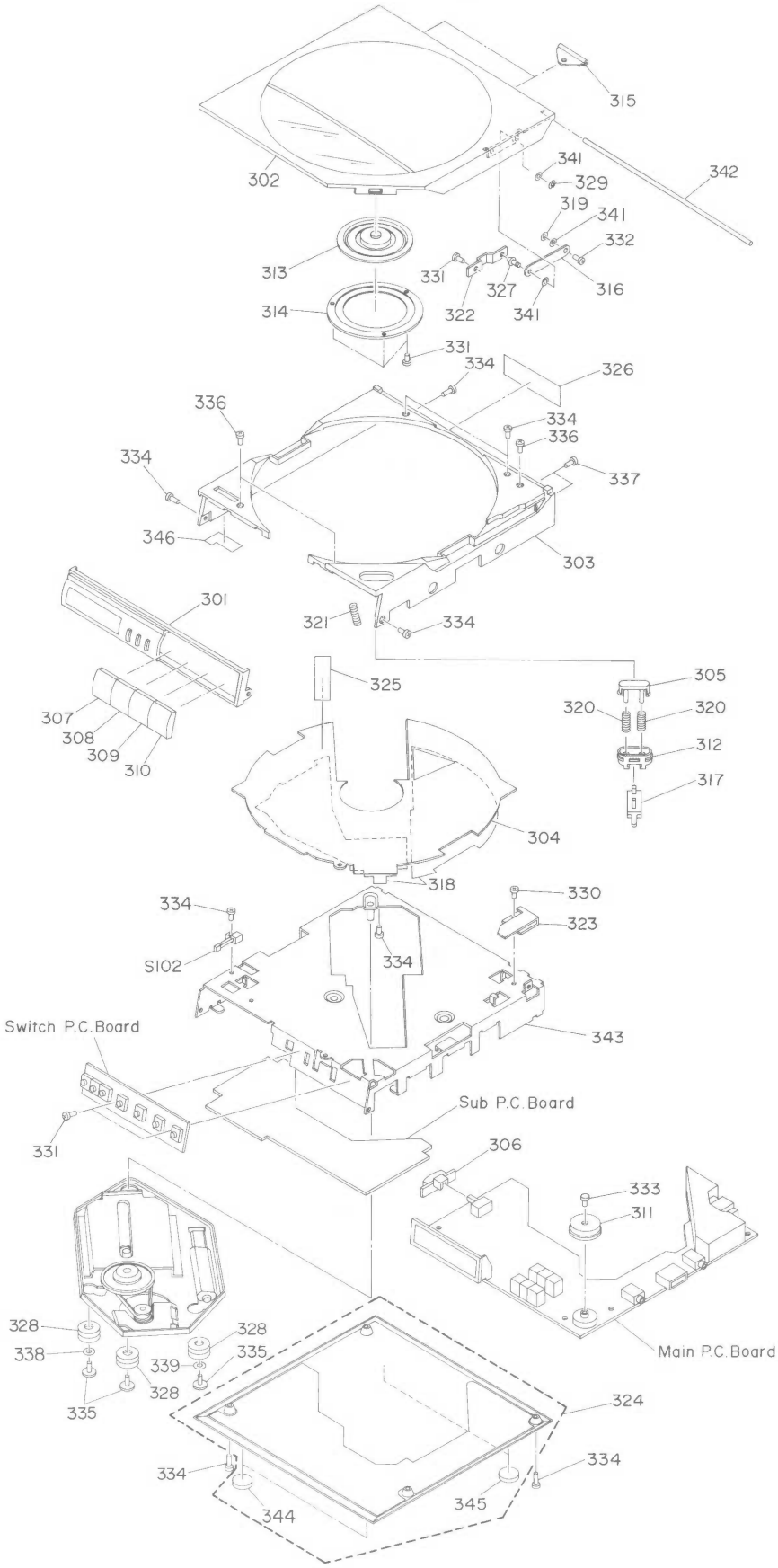

NOTE: Parts excluded in the parts list are not stocked since they are seldom required for routine service. Some delay should be anticipated when ordering these items.

PARTS LIST

CAUTION:
The ⚠ mark, the Location No. circled with oval in the schematic diagram and the parts list designate components which have special characteristics important for safety and should be replaced only with types identical to those in the original circuit or specified in the parts list.

Location No.	Part No.	Description
SEMICONDUCTORS		
Q101	B0377580	IC, TA8101N
Q102	B0412016	IC, TC9201AF-BS
Q103	22117933	IC, NJM3404AM
Q104	22117700	IC, NJM3403AMC
Q105, 106	22117934	IC, BA6280AF
Q107	A6359870	Transistor, 2SC3326-B
Q501	B0272755	IC, TD6710AN
Q502	B0326190	IC, TA7415P
Q503, 504	A6359870	Transistor, 2SC3326-B
Q505, 506	A6541140	Transistor, 2SA1162-GR
Q507	A6335480	Transistor, 2SC2712-GR
Q601	22128003	IC, TMP47C420AF8621Z
Q602	22117550	IC, PST520D
Q603	B0412006	IC, TC9200AF-BS
Q604	B0484015	IC, TC5518CFL-20
Q701	A6543610	Transistor, 2SA1213-Y
Q702, 703, 704	A6335480	Transistor, 2SC2712-GR
Q801	22117697	IC, TL1451CNS
Q802, 803, 804	A6541140	Transistor, 2SA1162-GR
Q805	A6335480	Transistor, 2SC2712-GR
Q806	A6341960	Transistor, 2SC2873-Y
Q807	A6543610	Transistor, 2SA1213-Y
D101	22119261	Diode, SB0505CP-T
D102, 103, 104	A7153900	Diode, 1SS294
D105	22119261	Diode, SB0505CP-T
D106, 107, 108	A7153900	Diode, 1SS294
D501	A7150650	Diode, 1SS184
D601, 602, 603	A7150650	Diode, 1SS184
D801, 802	A7580250	Diode, 1GWJ42
ELECTRICAL PARTS		
L801, 802	22211351	Choke Coil, 47μH
L803	22211350	Choke Coil, 390μH
L804	22211352	Choke Coil, 100μH
T801	22224591	D/D Transformer, Converter

Location No.	Part No.	Description
S101	22196844	Push Switch, Start Limit
S102	22196881	Leaf, Switch, Close Limit
S601, 602	22196879	Key Switch, Play/Stop
S603, 604	22196879	Key Switch, Up/Down
S605, 606	22196879	Key Switch, Memory/Display
S607	22196879	Key Switch, Repeat
S701	22196712	Slide Switch, Power
J103	22169281	Socket, 4P, DC IN, Power Supply
J501	22198140	Jack, ϕ3.5, LINE OUT
J502	22198294	Jack, ϕ3.5, Headphone
J601	22169282	Jack, 4P, Remote Control
Z501, 502	22137781	Low-pass Filter, LC-7
Z601	22104655	Liquid Crystal Display
Z602	22153443	Ceramic Oscillator, 4.19 MHz
Z603	22153445	Crystal Oscillator, 16.9 MHz
Z901	22153444	Ceramic Oscillator, 2 MHz
CAPACITORS		
C = ±0.25pF, D = ±0.5pF, J = ±5%, K = ±10% ABBREVIATIONS: TT=Tantalum, CH=Ceramic Chip, EL = Electrolytic, PP = Polypropylene		
C101	20472101	TT, 100mfd, 4V
C102	20472100	TT, 10mfd, 4V
C103	20366223	CH, 0.022mfd, 25V, K
C104	20473100	TT, 10mfd, 6.3V
C105	20331181	CH, 180pF, 50V, J
C106	20331680	CH, 68pF, 50V, J
C107	20331309	CH, 3pF, 50V, C
C108	20366103	CH, 0.01mfd, 25V, K
C109	20331100	CH, 10pF, 50V, D
C110	20366103	CH, 0.01mfd, 25V, K
C111	20363152	CH, 1500pF, 50V, K
C113	20331181	CH, 180pF, 50V, J
C114	20433220	EL, 22mfd, 6.3V
C115	20439109	EL, 1mfd, 50V
C116	20331221	CH, 220pF, 50V, J
C117	20366223	CH, 0.022mfd, 25V, K
C118, 119	20331470	CH, 47pF, 50V, J

Location No.	Part No.	Description
C120	20331470	CH, 47pF, 50V, J
C121	20433100	EL, 10mfd, 6.3V
C122	20369333	CH, 0.033mfd, 12.5V, K
C123	20366103	CH, 0.01mfd, 25V, K
C124	20439228	EL, 0.22mfd, 50V
C125	20439229	EL, 2.2mfd, 50V
C126	20432101	EL, 100mfd, 4V
C127	20366223	CH, 0.022mfd, 25V, K
C128	20363472	CH, 4700pF, 50V, K
C129	20439229	EL, 2.2mfd, 50V
C130	20439228	EL, 0.22mfd, 50V
C131, 132	20363102	CH, 1000pF, 50V, K
C133, 134	20366103	CH, 0.01mfd, 25V, K
C135	20400004	EL, 180mfd, 10V
C136, 137	20473100	TT, 10mfd, 6.3V
C138, 139	20366223	CH, 0.022mfd, 25V, K
C140	20432470	EL, 47mfd, 4V
C141	20363102	CH, 1000pF, 50V, K
C142	20432470	EL, 47mfd, 4V
C143	20366103	CH, 0.01mfd, 25V, K
C501, 502	20331331	CH, 330pF, 50V, J
C503, 504	22321290	PP, 1200pF, 50V, J
C505, 506	20363102	CH, 1000pF, 50V, K
C507, 508	20363182	CH, 1800pF, 50V, K
C509, 510	20363561	CH, 560pF, 50V, K
C511, 512	20435100	EL, 10mfd, 16V
C513, 514	20432221	EL, 220mfd, 4V
C515, 516	20439109	EL, 1mfd, 50V
C517	20432101	EL, 100mfd, 4V
C518	20432470	EL, 47mfd, 4V
C519	20433220	EL, 22mfd, 6.3V
C520	20432221	EL, 220mfd, 4V
C521	20432101	EL, 100mfd, 4V
C522	20433220	EL, 22mfd, 6.3V
C523	20435100	EL, 10mfd, 16V
C524	20435470	EL, 47mfd, 16V
C525	20439109	EL, 1mfd, 50V
C603	20366223	CH, 0.022mfd, 25V, K
C604	20439338	EL, 0.33mfd, 50V
C605, 606	20331330	CH, 33pF, 50V, J
C607	20363102	CH, 1000pF, 50V, K
C701	20433220	EL, 22mfd, 6.3V
C702	20435100	EL, 10mfd, 16V
C703	20414221	EL, 220mfd, 10V
C801	20439339	EL, 3.3mfd, 50V
C802	20366103	CH, 0.01mfd, 25V, K
C803	20439478	EL, 0.47mfd, 50V
C804	20363102	CH, 1000pF, 50V, K
C805	20363222	CH, 2200pF, 50V, K

Location No.	Part No.	Description
C806	20366223	CH, 0.022mfd, 25V, K
C807	20363472	CH, 4700pF, 50V, K
C808	20363222	CH, 2200pF, 50V, K
C809	20400003	EL, 47mfd, 16V
C810	20400002	EL, 220mfd, 16V
C811	20400003	EL, 47mfd, 16V
C812	20331560	CH, 56pF, 50V, J
C813	20400004	EL, 180mfd, 10V
C814	20400001	EL, 100mfd, 16V
C815	20413331	EL, 330mfd, 6.3V

RESISTORS

All resistors are Metal Chip, 1/10W, ±5% unless otherwise noted.
1K ohm = 1000 ohm, 1M ohm = 1000K ohm

R103	20541479	4.7 ohm
R104	20541102	1K ohm
R105	20541184	180K ohm
R106	20541124	120K ohm
R107	22658932	100K ohm, B, Semi-fixed Variable
R108	20541683	68K ohm
R109	20541223	22K ohm
R110	20541183	18K ohm
R111	20541103	10K ohm
R112	20541564	560K ohm
R113	20541151	150 ohm
R114	20541332	3.3K ohm
R115	22658933	20K ohm, B, Semi-fixed Variable
R116	22658932	100K ohm, B, Semi-fixed Variable
R117	20541225	2.2M ohm
R118	20541822	8.2K ohm
R119	22658932	100K ohm, B, Semi-fixed Variable
R120	20541563	56K ohm
R121	20541682	6.8K ohm
R122	20541123	12K ohm
R123	20541563	56K ohm
R124	20541683	68K ohm
R125	20541683	68K ohm
R126	20541184	180K ohm
R127	20541182	1.8K ohm
R128	20541153	15K ohm
R129	20541105	1M ohm
R130, 131	20541103	10K ohm
R132	20541223	22K ohm
R133	20541103	10K ohm
R134	20541183	18K ohm

Location No.	Part No.	Description
R135, 136	20541822	8.2K ohm
R137	20541822	8.2K ohm
R138	20541102	1K ohm
R139	20541181	180 ohm
R140	20541122	1.2K ohm
R141	20541182	1.8K ohm
R143	20541473	47K ohm
R201	20541273	27K ohm
R202, 203	20540001	10K ohm, F = ±1%
R204	20541224	220K ohm
R205	20541102	1K ohm
R206	20541222	2.2K ohm
R207	20541103	10K ohm
R208	20541473	47K ohm
R209	20541682	6.8K ohm
R210	20541222	2.2K ohm
R211	20541122	1.2K ohm
R212	20541392	3.9K ohm
R213, 214	20540001	10K ohm, F
R215	20541183	18K ohm
R216	22521363	36K ohm
R217	20541102	1K ohm
R218	20540002	18K ohm, F
R219	20541182	1.8K ohm
R220	20540002	18K ohm, F
R221	20541153	15K ohm
R222	20541223	22K ohm
R223, 224	20540004	47K ohm, F
R225, 226	20541102	1K ohm
R227, 228	20540001	10K ohm, F
R229	20541472	4.7K ohm
R230, 231	20541109	1 ohm
R232	20541109	1 ohm
R233	20541821	820 ohm
R234	20541333	33K ohm
R235	20541564	560K ohm
R501, 502	20541122	1.2K ohm
R503, 504	20541472	4.7K ohm
R507, 508	20541153	15K ohm
R509, 510	20541822	8.2K ohm
R511, 512	20541562	5.6K ohm
R513, 514	20541103	10K ohm
R515, 516	20541153	15K ohm
R517, 518	20541102	1K ohm
R519, 520	20541331	330 ohm
R521, 522	20541220	22 ohm
R523, 524	20541223	22K ohm
R525	20541683	68K ohm
R526	22651696	10K ohm, C, Variable, Volume

Location No.	Part No.	Description
R527	20541473	47K ohm
R528	20541104	100K ohm
R529, 530	20541473	47K ohm
R531	20541184	180K ohm
R532	20541473	47K ohm
R533, 534	20541102	1K ohm
R535	20541103	10K ohm
R536	20541394	390K ohm
R601, 602	20541562	5.6K ohm
R603, 604	20541562	5.6K ohm
R608, 609	20541562	5.6K ohm
R610, 611	20541562	5.6K ohm
R612, 613	20541562	5.6K ohm
R614	20541562	5.6K ohm
R615, 616	20541563	56K ohm
R617, 618	20541563	56K ohm
R619	20541103	10K ohm
R620	20541392	3.9K ohm
R701	20541473	47K ohm
R702	20541222	2.2K ohm
R703	20541473	47K ohm
R704	20541223	22K ohm
R705	20541332	3.3K ohm
R707	20541474	470K ohm
R708	20541473	47K ohm
R801	20541472	4.7K ohm
R802	20541473	47K ohm
R803	20540002	18K ohm, F
R804	20540003	33K ohm, F
R805	20541103	10K ohm
R806	20541102	1K ohm
R807	20541473	47K ohm
R808	20541153	15K ohm
R809	20540002	18K ohm, F
R810, 811	20540003	33K ohm, F
R812	20540003	33K ohm, F
R813	20541472	4.7K ohm
R814	20541682	6.8K ohm
R815	20541393	39K ohm
R816	20541224	220K ohm
R817	20541101	100 ohm
R818, 819	20541471	470 ohm
R820	20541682	6.8K ohm
R821, 822	20541333	33K ohm
R823	20541471	470 ohm
R824	20541100	10 ohm
R825	20540005	56K ohm, F
R826	20540002	18K ohm, F

Location No.	Part No.	Description
ACCESSORIES		
AC01	22908291	Owner's Manual (U.S.A)
AC01	22908292	Owner's Manual (Canada)
AC01	22908293	Owner's Manual (Europe)
AC01	22908294	Owner's Manual (UK)
AC01	22908295	Owner's Manual (Australia)
AC01	22908296	Owner's Manual (Others)
AC02	22152735	Headphone
AC03	22120123	Wire Remote Control
AC04	22197081	Pin Cord, Line Out
AC05	22991180	Carring Case
AC06	22197082	DC Plug Cord, ϕ3.4
AC07	22101328	Battery Pack, BU-R200EX

Location No.	Part No.	Description

PARTS LIST
AC ADAPTOR (TAC-200)

	Location No.	Part No.	Description
	SEMICONDUCTORS		
	Q901	A6058730	Transistor, 2SK365-BL
	Q902	A6868350	Transistor, 2SD1413
	Q906	22117931	IC, BX1407-RM
	Q908	22128009	IC, TMP4270N-9401
	Q909	22117987	IC, M51943BSL
⚠	D901, 902	A7978430	Diode, S5277B (LC5)
	D903	A7112640	Diode, 05AZ7.5-Y
	D905	A8601100	Diode, TLR123
	ELECTRICAL PARTS		
⚠	T901	22224909	Power Transformer (U.S.A., Canada)
⚠	T901	22224911	Power Transformer (Europe)
⚠	T901	22224912	Power Transformer (UK)
⚠	T901	22294913	Power Transformer (Australia)
⚠	T901	22224914	Power Transformer (Others)
⚠	S901	22196695	Slide Switch, Voltage Selector (Others)
	J902	22198303	Jack, Charge Out
	J903	22186310	Plug, 4P, DC OUT
⚠	EP01	22176745	Power Cord (U.S.A., Canada)
⚠	EP01	22176746	Power Cord (Europe)
⚠	EP01	22176748	Power Cord (UK)
⚠	EP01	22176747	Power Cord (Australia)
⚠	EP01	22176601	Power Cord (Others)
	EP02	22120122	Remote Control Unit, RM-A200
	CAPACITORS		
	C901	20415222	EL, 2200mfd, 16V
	C902	20414101	EL, 100mfd, 10V
	C903	20414102	EL, 1000mfd, 10V
	C904	20414101	EL, 100mfd, 10V
	C907	20418338	EL, 0.33mfd, 50V

Location No.	Part No.	Description
RESISTORS		
R901	20511101	100 ohm, 1/4W, J, Carbon Film
R902	20511331	330 ohm, 1/4W, J, Carbon Film
CABINET PARTS LIST (REMOTE CONTROL)		
401	20832090	Battery Cover, Remote Control

PARTS LIST
BATTERY CASE (BU-200)

Location No.	Part No.	Description
SEMICONDUCTOR		
D921	A7580250	Diode, 1GWJ42
ELECTRICAL PARTS		
S921	22148140	Thermostat Switch
J921	22186309	Plug, 2P, Charge IN
J922	22198230	Jack, 4P, DC OUT

Location No.	Part No.	Description
RESISTOR		
R921	20520009	10 ohm, 2W, Metal Oxide Film

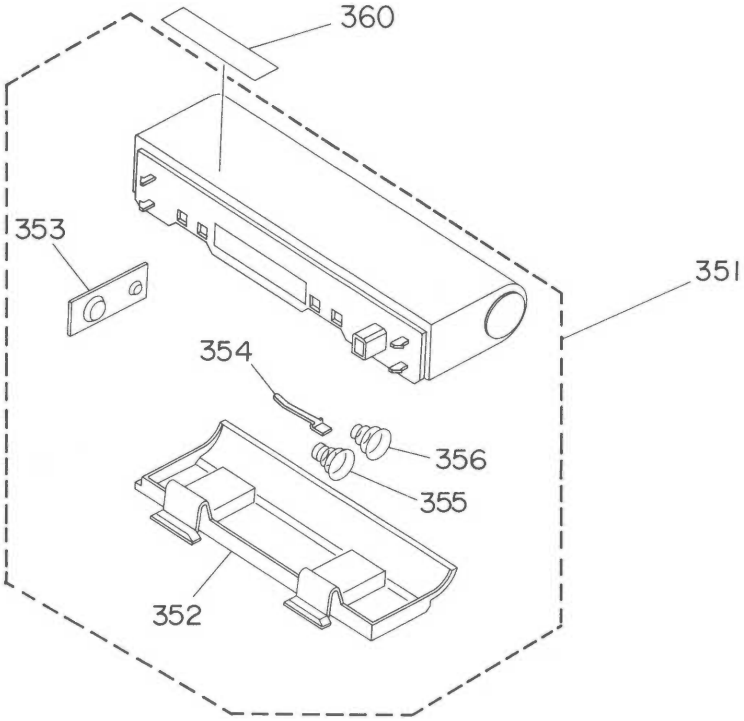

Location No.	Part No.	Description
CABINET PARTS LIST		
351	20832093	Battery Box Ass'y
352	20832094	Battery Cover Ass'y
353	20024369	Contact (+, –)
354	25779646	Leaf Contact, Charge
355	20024375	Spring Ass'y (+)
356	25777634	Spring (–)

Location No.	Part No.	Description

T.C. Corp
10 North Main St
Wharton NJ 07885
www.servicemanuals.net

TOSHIBA CORPORATION
1-1, SHIBAURA 1-CHOME, MINATO-KU, TOKYO 105, JAPAN