FILE NO. 176-233

TOSHIBA

COMPACT DISC PLAYER

XR-P9, XR-J9, XR-V12, XR-V15, XR-30, XR-35

SERVICE TEXT

TOSHIBA CORPORATION

PREFACE

In the year 1986, the CD player is now at its height of popularity, each maker going into the portable one. Under this situation, Toshiba Corporation has endeavored in the development of low-power-consumption ICs and the extensive employment of ICs, in contrast to the conventional CD player. As the customers are aware, in the 1986 model, the usage of ICs is almost 99%, excluding the power supply circuits. Therefore, in the present technical manual, the descriptions differ from those for discrete circuits. Emphasis is placed on the explanation of circuitry in ICs. Where there occur points not understandable, the manuals for conventional CD players should be referred to. Concerning the methods of adjustments, adjusting jigs are not required; the design is made for the adjustments only with a single synchroscope. Due to the extensive employment of ICs, the troubleshooting in service maintenance is fully described.

In this manual, descriptions are made with XR-P9 employing ICs as above. In XR-V12, -V15, XR-30 and -35 the microcomputer differs, so that only the main circuitry differing from that in XR-P9 is explained. For other portions, the contents are the same as in XR-P9.

In XR-V12, -V15, XR-30 and -35, there are those with "A" in a type name on the front panel, XR-V12A, for example. In this case, the pickup differs and so there is no compatibility. In ordering for service parts, care is thus necessary. An "A" label is attached near the rating name plate. (For details, refer to the service data.)

CONTENTS

I PRINCIPLE AND OPERATION OF BEAM LASER PICKUP 6, 7

II. FLAT IC REPLACEMENT 8
1. Removal of the Flat IC 8
2. Attaching of Flat IC 8

III SYSTEM OPERATION OF XR-P9 9
XR-P9 (XR-J9) Block Diagram (1) 10
XR-P9 (XR-J9) Block Diagram (2) 11
XR-V12/V15 (XR-30, XR-35) Block Diagram (1) 12
XR-V12/V15 (XR-30, X-35) Block Diagram (2) 13

IV OPERATION OF MAIN POWER CIRCUIT . . . . . 14 ~ 47
CIRCUIT OPERATIONS (XR-P9, XR-J9) 14
1. Operation of Power Supply Circuitry 14
1-1 When Power is Derived from AC Mains 14
1-2 When Power is Derived from Battery Pack (BU-9) 14
1-3 Power Supply Circuit for System 14
1-4 Power Supply Circuit for Disc Motor 14
1-5 Battery Voltage Sensing Circuit 15
1-6 AC/DC Switching Detection Circuit 16
1-7 Usual Operation 16
1-8 Operation of Battery Pack (BU-P9) 18, 19
2. Reset, Muting and Emphasis Circuits 20, 21
2-1 Reset Action 20
2-2 Muting Action 20
2-3 Operation of Emphasis Circuit 21
3. Operation of APC (Auto Power Control) Circuit 22
4. Operation of Focussing Servo Circuit 24, 25
4-1 Focussing Error Detection and Focussing Servo Circuit 24
4-2 Focus Search 24
5. Tracking Servo Circuit 28, 29
6. Pickup Feed Motor Servo Circuit 30
7. Servo Control at Defect (Dropout) and Vibration 32, 33
7-1 At Dropout 32
7-2 At Vibration 32
8. CLV Servo Circuit 36, 37
9. Search System Circuit . . . . . 40 ~ 43
9-1 Actuator Kick 40, 41
9-2 Feed Motor Kick 43
10. Operation of Audio Circuit (EFM Signal) 44, 45
CIRCUIT OPERATIONS (XR-V12/15, XR-30/35) 46, 47
1. FORWARD, REVERSE, AND STOP OPERATIONS OF TRAY MOTOR 46
2. OPERATION OF DISC MOTOR BRAKE CIRCUIT 47

V FUNCTION AND OPERATION OF MICROCOMPUTER . . . . . 48 ~ 61

VI MAIN IC BLOCK DIAGRAMS . . . . . 62 ~ 68

VII OPERATION OF MECHANISM . . . . . 69 ~ 72
OUTLINE OF MECHANISM SECTION (XR-P9, XR-J9) . . . . . 69 ~ 72
1. Mechanism Operation 69
2. Replacement of Main Parts 69

2-1 Removal at Mechanism Assy ... 69
2-2 Replacement of Disc Clamper ... 70
2-3 Replacement of Pickup Drive Motor ... 71
2-4 Replacement of Laser Pickup ... 71
2-5 Replacement of Disc Motor ... 72
XR-V12/V15 (XR-30, XR-35) MECHANISM OPERATION ... 73 ~ 80
1. Outline of Mechanism (Points of Difference from Conventional Mechanism) ... 73
2. Mechanism and Operation ... 73
2-1 Loading Mechanism ... 73
2-2 Internal Construction of Disc Tray ... 76
2-3 Removal of Disc Tray ... 77
3. Pickup Carry Mechanism (When carrying the pickup to outside) ... 78
4. Replacement of Main Parts ... 78
4-1 Replacement of Pickup ... 78
4-2 Replacement of Pickup Carry Motor ... 79
4-3 Replacement of Disc Motor and Clamper Lever ... 79
4-4 Replacement of Loading Motor and Loading Gears ... 80
5. Transportation Lock of Pickup ... 80
MECHANISM EXPLODED VIEW AND LUBRICATION POINTS (XR-P9, XR-J9) ... 81
XR-V12/V15 (XR-30/35) ... 82
VIII PICKUP REPLACEMENT AND ADJUSTMENT ... 83 ~ 88
PICKUP REPLACEMENT (XR-P9, XR-J9) ... 83, 84
ADJUSTMENT XR-P9, XR-J9 ... 85 ~ 88
1. Adjustment Locations ... 85
2. Power Supply ... 85
3. Test Terminal Temporary Soldering ... 85
4. Unit Position for Adjustment ... 85
5. Laser Power Coarse Adjustment ... 86
6. Tracking Error Balance Coarse Adjustment ... 86
7. Pickup Slant Adjustment ... 87
8. Focus Error Balance Adjustment ... 88
9. APC VR (Laser Power Line Adjustment) ... 88
10. Tracking Error Balance Fine Adjustment ... 88
11. The Other Adjustment ... 88
ADJUSTMENT XR-V12/V15 (V12A/V15A) XR-30/35/30A/35A ... 89 ~ 91
1. Adjustment Locations ... 89
2. Adjustment Procedure after Replacement of Laser Pickup ... 89
2-1 Adjustment of Focus DC Offset (in replacement TA88101N, VR R339 ... 89
2-2 Adjustment of Focus Balance ... 89
2-3 Adjustment of Tracking Offset (in replacement of TA8101N, VR R337) ... 90
2-4 Adjustment of Tracking Error Balance ... 90
2-5 Adjustment of Analog Output Offset ... 90
3. Precaution in Replacement of Pickup ... 90
IX TROUBLESHOOTING ... 92 ~ 110
X WAVEFORM (XR-P9, XR-J9) ... 112 ~ 116

I. PRINCIPLE AND OPERATION OF BEAM LASER PICKUP

The three-beam pickup uses literally three beams but this does not mean the pickup contains three semiconductor lasers as the light sources. Simply speaking, one laser beam is split by the coherency of light into three beams which are focused on the disc. The TOPH7810, a pickup developed at our company, employs magnetic levitation for driving the actuators, astigmatism for detecting focussing errors, and a three-beam method for detecting tracking errors.

- **Focussing Error Detecting Method (Astigmatism Method)**
  This method utilizes an optics arrangement in which the reflected light will either diverge, go parallel, or converge, depending on the distance from the pickup's objective lens to the disc (see Fig. 1).

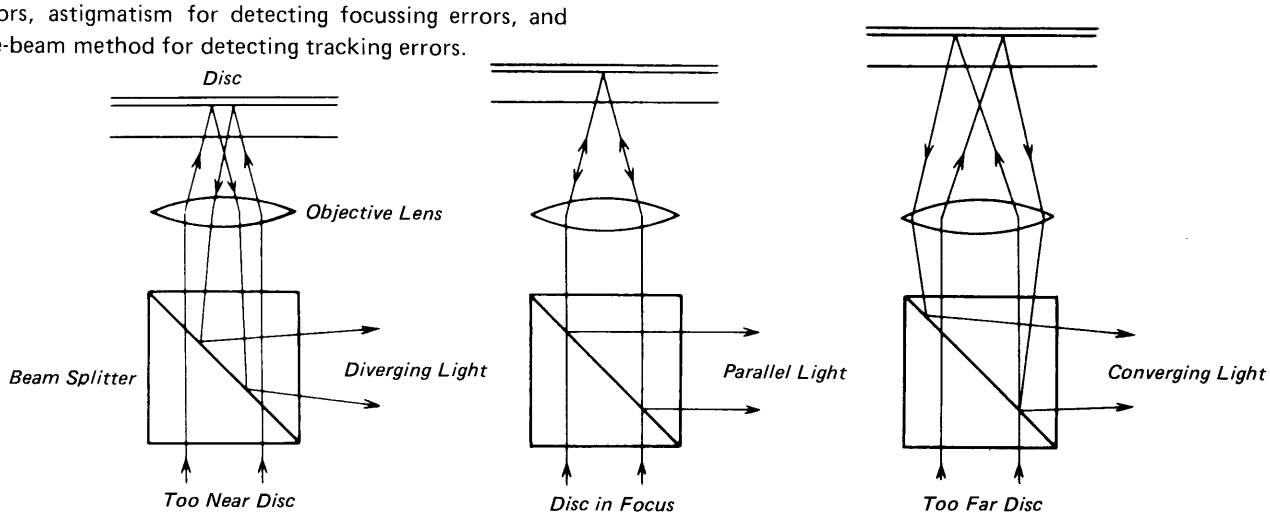

Fig. 1 Reflected Light from Disc

This reflected light passes through a combination lens consisting of a convex lens and a cylindrical lens and reaches the photodetectors which convert the light into focussing error signals (see Fig. 2).

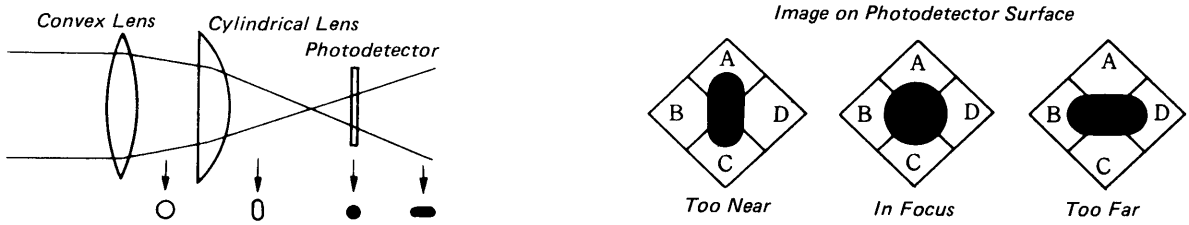

Fig. 2 Principle of Astigmatism

The circuitry in a focussing servomechanism performs substraction between two sum signals made of the detector outputs added diagonally, i.e., (A + C) − (B + D). When this difference becomes constantly zero, the focussing servomechanism goes into operation.

- **Tracking Error Detecting Circuit (Three-beam Method)**
  The principle of three beam production is as follows: the laser beam, emitted from the laser diode and falling on a slitted plate called a diffraction grating, undergoes interference and is spilt into three beams (see Fig. 3).

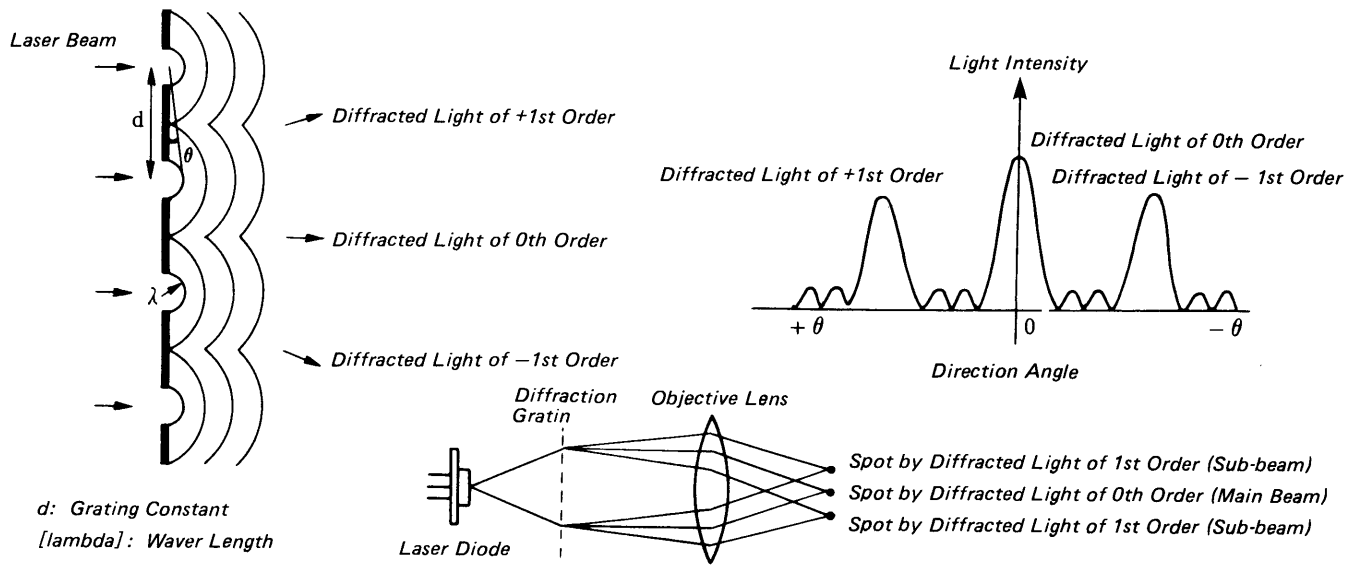

Fig. 3 Principle of Three-beam Production

The tracking error detection by the three-beam method takes place as follows:

The sub-beams are deflected through a certain offset angle with respect to the main beam. In this arrangement of the beams, there will be a difference in amount between the reflected sub-beams when the main beam deviates sideways off the track. This difference is converted into a tracking error signal. That is, a difference signal is made by subtraction between the outputs of Photodetectors E and F which receive the reflected sub-beams. When this signal is zero, the main beam is tracing the center of a track (see Fig. 4).

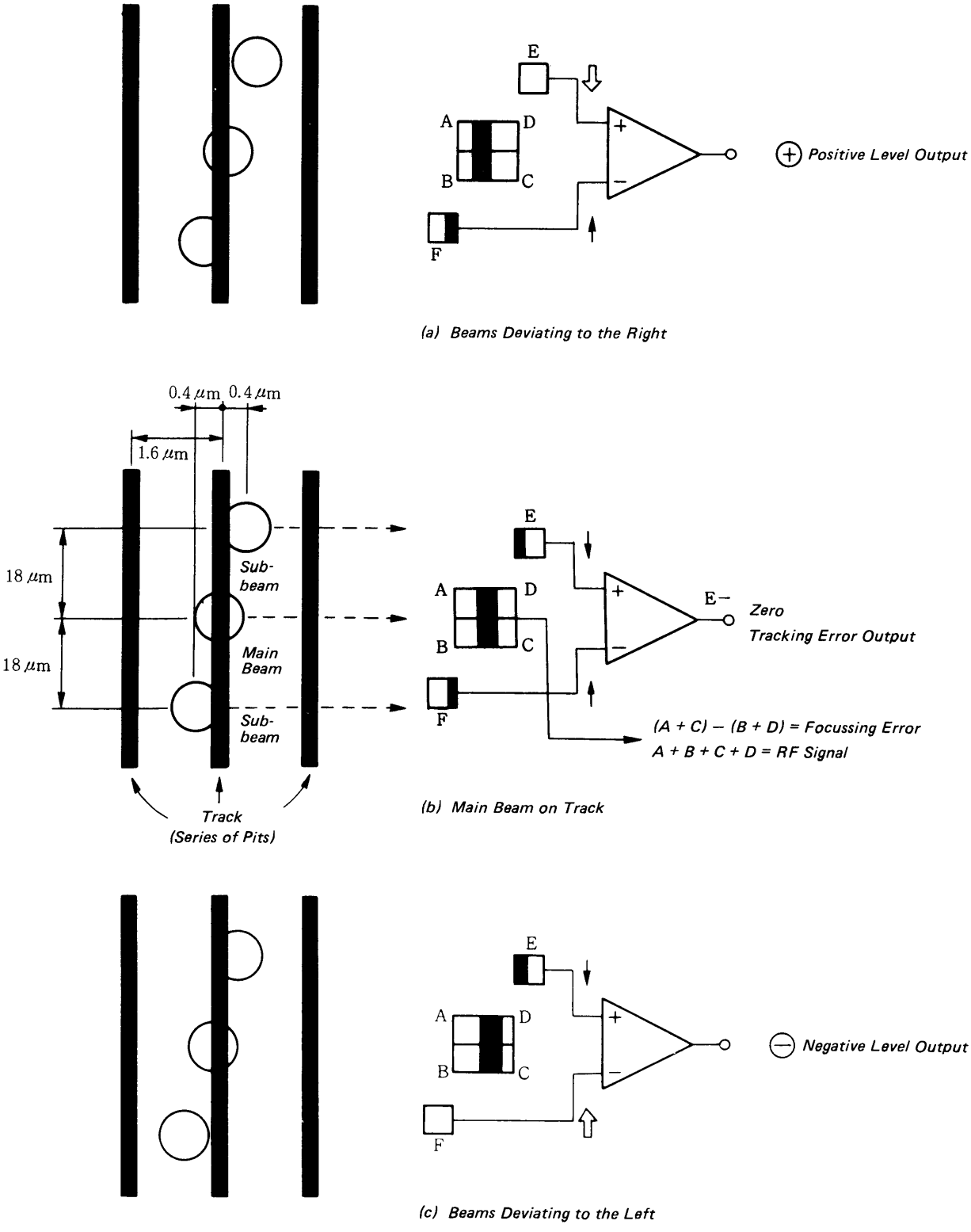

Fig. 4 Principle of Generation of Tracking Error Signal

II. FLAT IC REPLACEMENT

For the replacement of flat ICs, there are various jigs and tools. ICs are very different in size, so that you will have trouble.
In the following is explained the simplest method of flat

1. Removal of the Flat IC

(1) As shown in Fig. 1, a cutter knife is put onto a lead in the flat IC and pushed in the arrow direction. In this manner, the leads are cut off one after another.
In this case, the edge of the cutter knife should not be directed toward the PC board. The edge should be touched to the IC element.

Note: To cut off the lead, the cutter knife must not be slided in the arrow ——→ direction.
(The pattern on the PC board is stripped.)

(2) After removal of the flat IC, IC leads remaining on the PC board are all removed in arrow directions (on the pattern) with a soldering iron. Then, solder on the PC board pattern is cleaned off with the solder

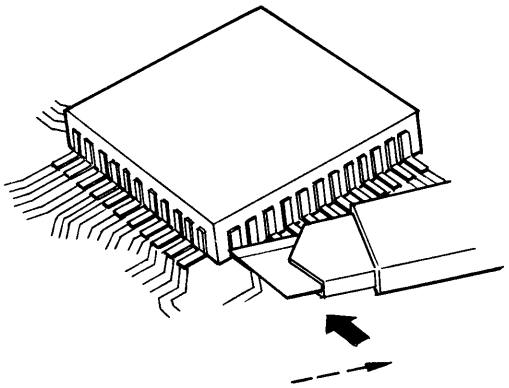

Fig. 1

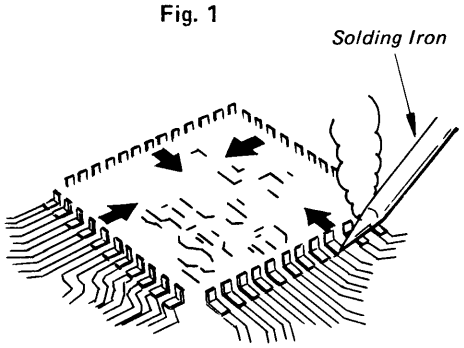

Fig. 2

2. Attaching of a Flat IC

(1) After cleaning off the solder, small quantity of soldering flux is applied onto the pattern portion, as indicated in Fig. 3.

(2) An IC element is put on the pattern, and small quantity of soldering flux is applied onto the IC leads (the quantity should be as small as possible).

(3) Leads of the IC are positioned, matching to the pattern. Then, two IC leads are tacked, as shown in Fig. 4. All leads are soldered along the length (in the arrow ← direction).

Note: When the solder quantity is excessive, a solder bridge is caused. It should be applied in small quantity.
In the case of a solder bridge being formed, this is removed with the solder wick.

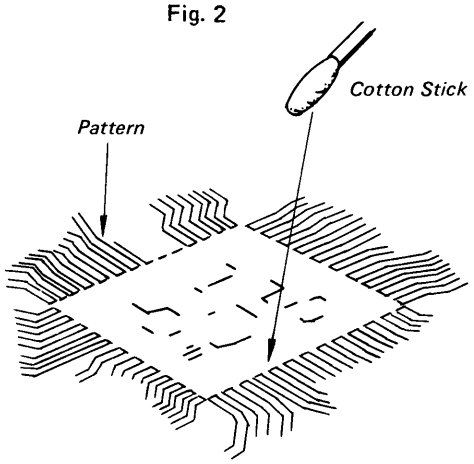

Fig. 3

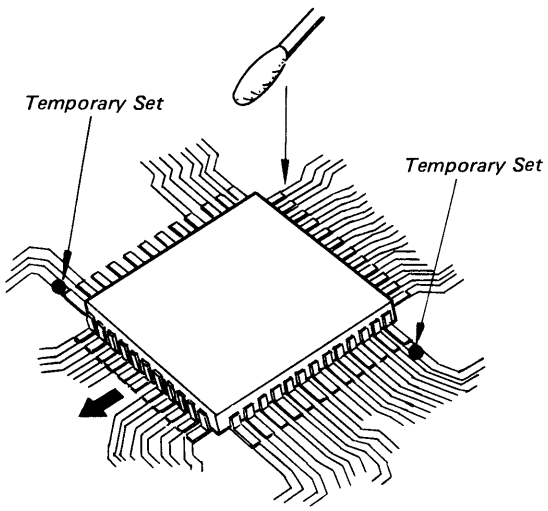

Fig. 4

III. SYSTEM OPERATION OF XR-P9

XR-P9 is Toshiba's first portable CD player developed as a 1986 model.
In this model, to operate the CD player with a +5V single power source, six kinds of ICs have been developed and used; i.e., TC9201, TC9200, TA8101, TA8102, TD6710 and TA7415. In the set, these ICs operate as follows.

1. **TC9201:** It is a servo control IC. The defect detection and the servo on timing conventionally in analog processing are digitalized. With commands from a microcomputer, the setting in sensitivity is made freely in various detecting elements. For the digital processing, there are two A/D converter circuits between TC9201 and TA8101, so that A/D conversion is made when necessary of a focus error signal, a tracking error signal, an RF ripple signal and a subbeam addition signal.
   In the combination with TC9200, PLL and CLV are controlled.
   In set operation, mainly with this IC, through various servo controls, automatic adjustments are made of the focus tracking search and the focus tracking gain.

2. **TC9200:** It is a processor IC. With the combination with TC9201 and TC5518 (16 Kbit S-RAM), the processings are made of FFM data demodulation, one C1 error rectification, two C2 errors rectification, corrections, and Q data demodulation. Signals to actuate a D/A converter is also generated.

3. **TA8101:** It is a main IC in the set, with the combination with TC9201. In its interior there are the following: a head amplifier to receive the defector output of the pickup, a tracking error generation circuit, a focus error generation circuit, an RF signal generation amplifier, a focus phase compensation amplifier, a focus search circuit, and an EFM generation circuit. To combine with TC9201, an A/D converter is also provided.

4. **TA8102:** It is a driver-use power IC; there are two-ch of driver circuitry. In XR-P9, a one-half power supply is used. The two-ch are thus used in BTL operation. Loads are driven of a tracking coil, a focus coil, a feed motor and a disc motor.

5. **TD6710:** It is a 14-bit integration DAC. With a sample-hold circuit provided in it, the external parts are few. It being of 14-bit, the operating frequency is 1/4 that of a 16-bit DAC and so it operates with a single +5V power source. Though of integration type, the power consumption is low.

6. **TA7415:** It is an audio amplification IC. There are provided two-ch each of a buffer amplifier, a lineup and a headphone amplifier. It operates with a single +5V power source. Stereo operation is possible with this IC alone.

In the above ICs, in set operation and set design TC9201 and TA8101 are the main. Therefore, by grasping operations of these two ICs, operation of the set is understood.
In XR-P9, a portable CD player, to achieve low power consumption in the battery, the means as follows are taken. That is, attention is paid to the power driver of highest power consumption. So, in play, the supply voltages in respective drivers of a focus coil, a tracking coil and a feed motor are by about 4V, which is the operation limit for TA8102. So, the loss in TA8102 is minimized.
The voltage of 4V is produced with a step-down type chopper DC-DC converter of highest efficiency with a battery as the power source. Then, when a dynamic range is required in such as search, vibration detection and defect detection, the power supplies for respective drivers are directly from the battery. Accordingly, the power consumption in use of the battery is merely 2.2W. This is possible with the stability operation such as vibration resistance and search characteristics. The power consumption 2.2W in battery usage is the world's lowest, which is a major sales point.
(Refer to the block diagrams.)

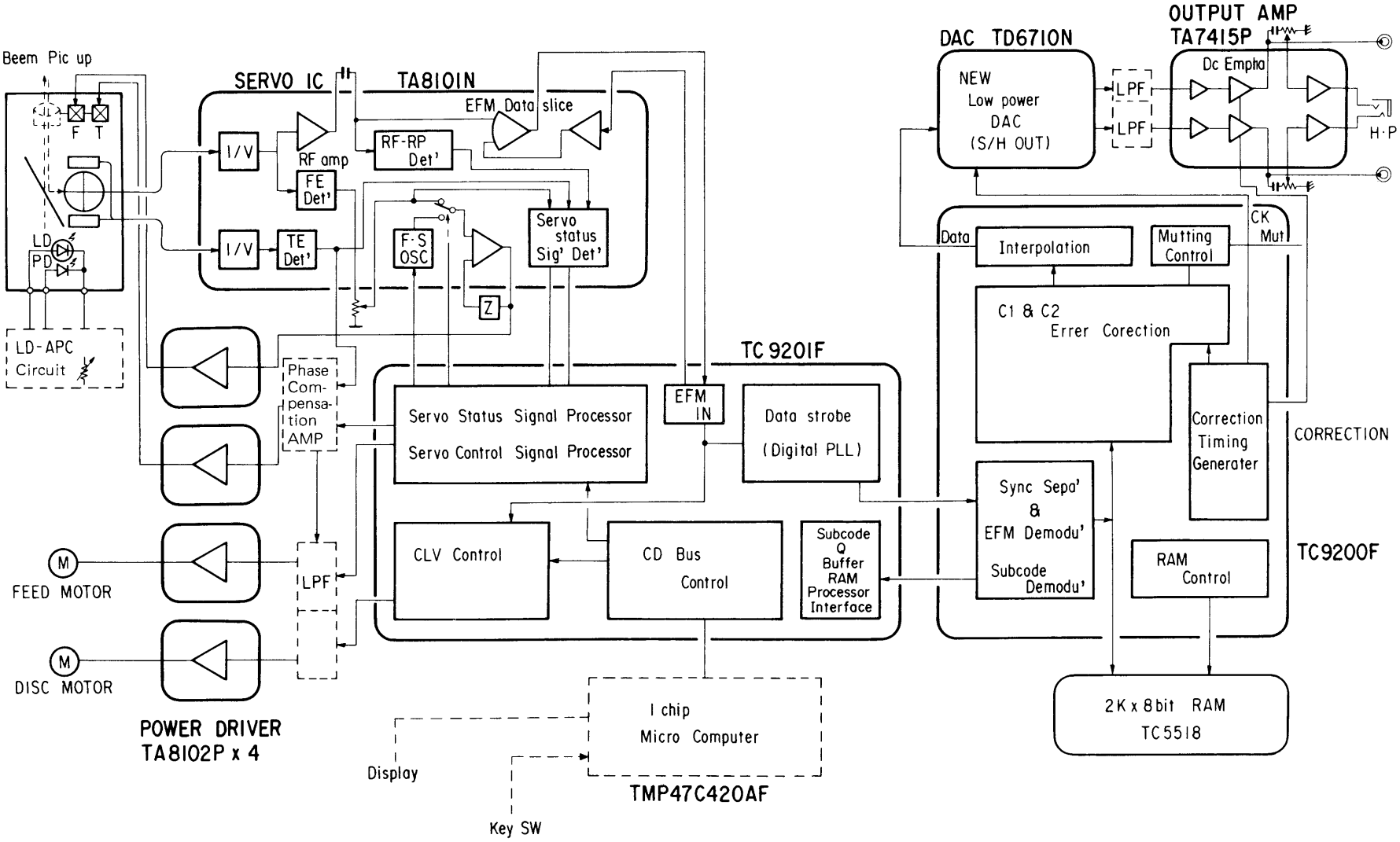
3 Beem Pic up
F
T
LD
PD
LD-APC Circuit
SERVO IC
TA8101N
I/V
I/V
RF amp
FE Det'
TE Det'
RF-RP Det'
EFM Data slice
F·S OSC
Servo status Sig' Det'
Z
Phase Com-pensa-tion AMP
TC9201F
Servo Status Signal Processor
Servo Control Signal Processor
EFM IN
Data strobe (Digital PLL)
CLV Control
CD Bus Control
Subcode Q Buffer RAM Processor Interface
LPF
M
FEED MOTOR
M
DISC MOTOR
POWER DRIVER
TA8102P x 4
Display
Key SW
1 chip Micro Computer
TMP47C420AF
DAC TD6710N
NEW Low power DAC (S/H OUT)
LPF
LPF
OUTPUT AMP
TA7415P
Dc Empfia
H·P
CK Mut
Data
Interpolation
Mutting Control
C1 & C2 Errer Corection
Correction Timing Generater
CORRECTION
Sync Sepa' & EFM Demodu'
Subcode Demodu'
RAM Control
TC9200F
2K x 8bit RAM
TC5518

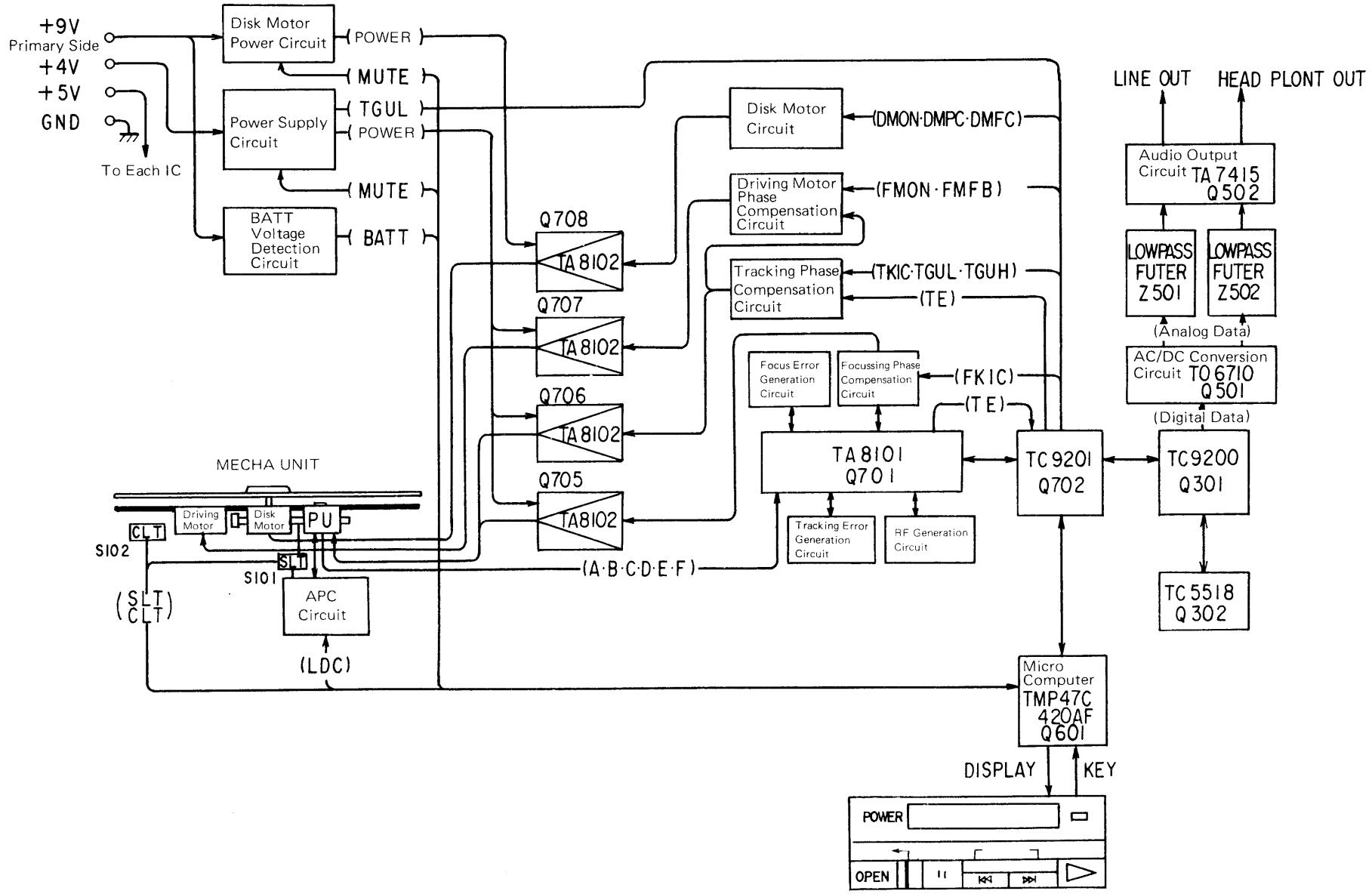
+9V
Primary Side
+4V
+5V
GND
To Each IC
Disk Motor Power Circuit
POWER
MUTE
Power Supply Circuit
TGUL
POWER
MUTE
BATT Voltage Detection Circuit
BATT
Q708
TA8102
Q707
TA8102
Q706
TA8102
Q705
TA8102
Disk Motor Circuit
(DMON·DMPC·DMFC)
Driving Motor Phase Compensation Circuit
(FMON·FMFB)
Tracking Phase Compensation Circuit
(TKIC·TGUL·TGUH)
(TE)
Focus Error Generation Circuit
Focussing Phase Compensation Circuit
(FKIC)
(TE)
TA8101 Q701
Tracking Error Generation Circuit
RF Generation Circuit
(A·B·C·D·E·F)
TC9201 Q702
LINE OUT
HEAD PLONT OUT
Audio Output Circuit TA7415 Q502
LOWPASS FUTER Z501
LOWPASS FUTER Z502
(Analog Data)
AC/DC Conversion Circuit TC6710 Q501
(Digital Data)
TC9200 Q301
TC5518 Q302
MECHA UNIT
Driving Motor
Disk Motor
PU
CLT
SLT
S102
S101
(SLT)
(CLT)
APC Circuit
(LDC)
Micro Computer TMP47C 420AF Q601
DISPLAY
KEY
POWER
OPEN

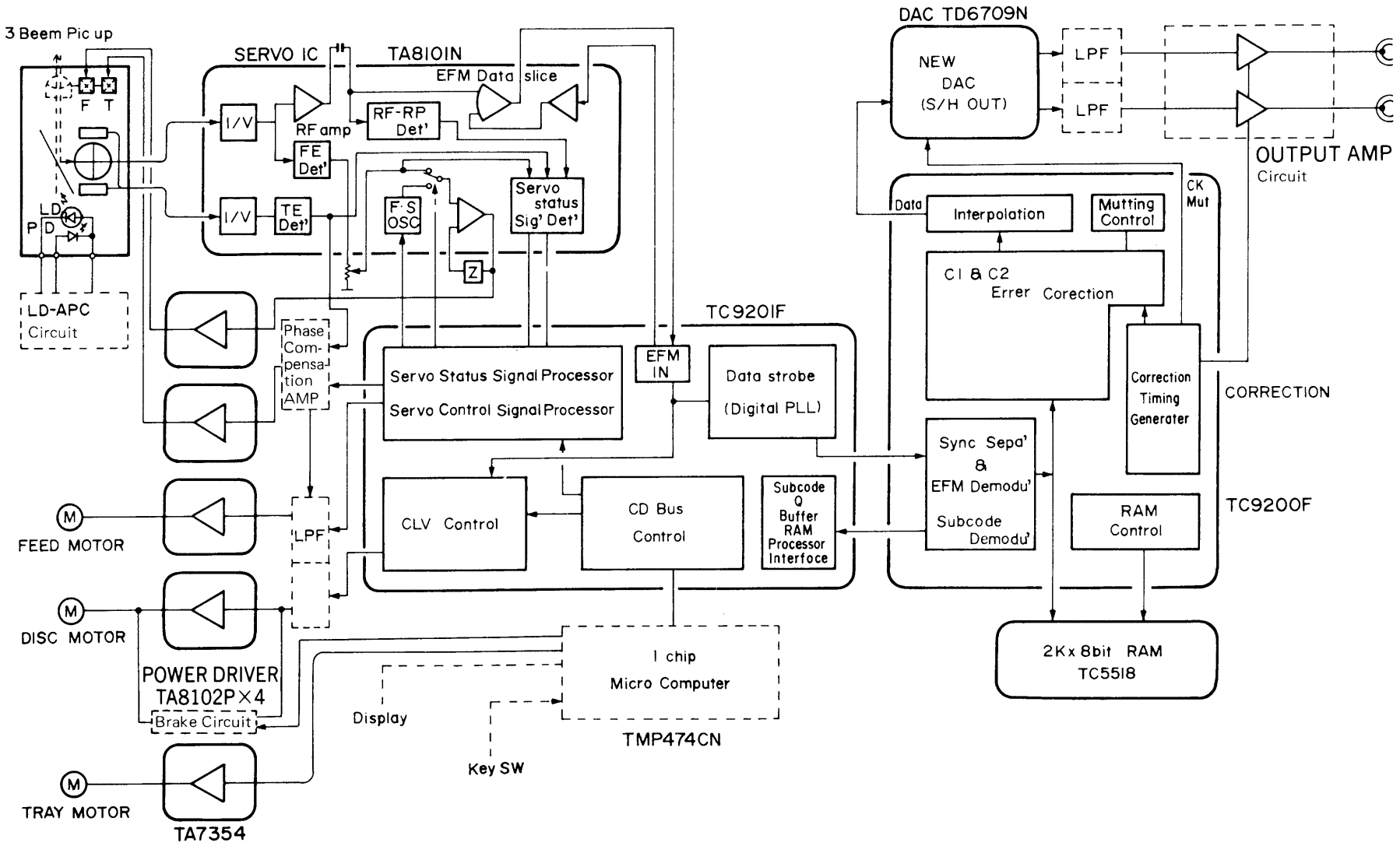
3 Beem Pic up
F
T
LD
PD
LD-APC
Circuit
SERVO IC
TA8101N
I/V
RF amp
RF-RP
Det'
EFM Data slice
FE
Det'
I/V
TE
Det'
F·S
OSC
Servo
status
Sig' Det'
Z
Phase
Com-
pensa-
tion
AMP
TC9201F
Servo Status Signal Processor
Servo Control Signal Processor
EFM
IN
Data strobe
(Digital PLL)
CLV Control
CD Bus
Control
Subcode
Q
Buffer
RAM
Processor
Interfoce
LPF
FEED MOTOR
DISC MOTOR
POWER DRIVER
TA8102P×4
Brake Circuit
TRAY MOTOR
TA7354
Display
Key SW
1 chip
Micro Computer
TMP474CN
DAC TD6709N
NEW
DAC
(S/H OUT)
LPF
LPF
OUTPUT AMP
Circuit
Data
Interpolation
Mutting
Control
CK
Mut
C1 & C2
Errer Corection
Correction
Timing
Generater
CORRECTION
Sync Sepa'
&
EFM Demodu'
Subcode
Demodu'
RAM
Control
TC9200F
2K×8bit RAM
TC5518

XR-V12/V15(XR-30, XR-35) BLOCK DIAGRAM (2)

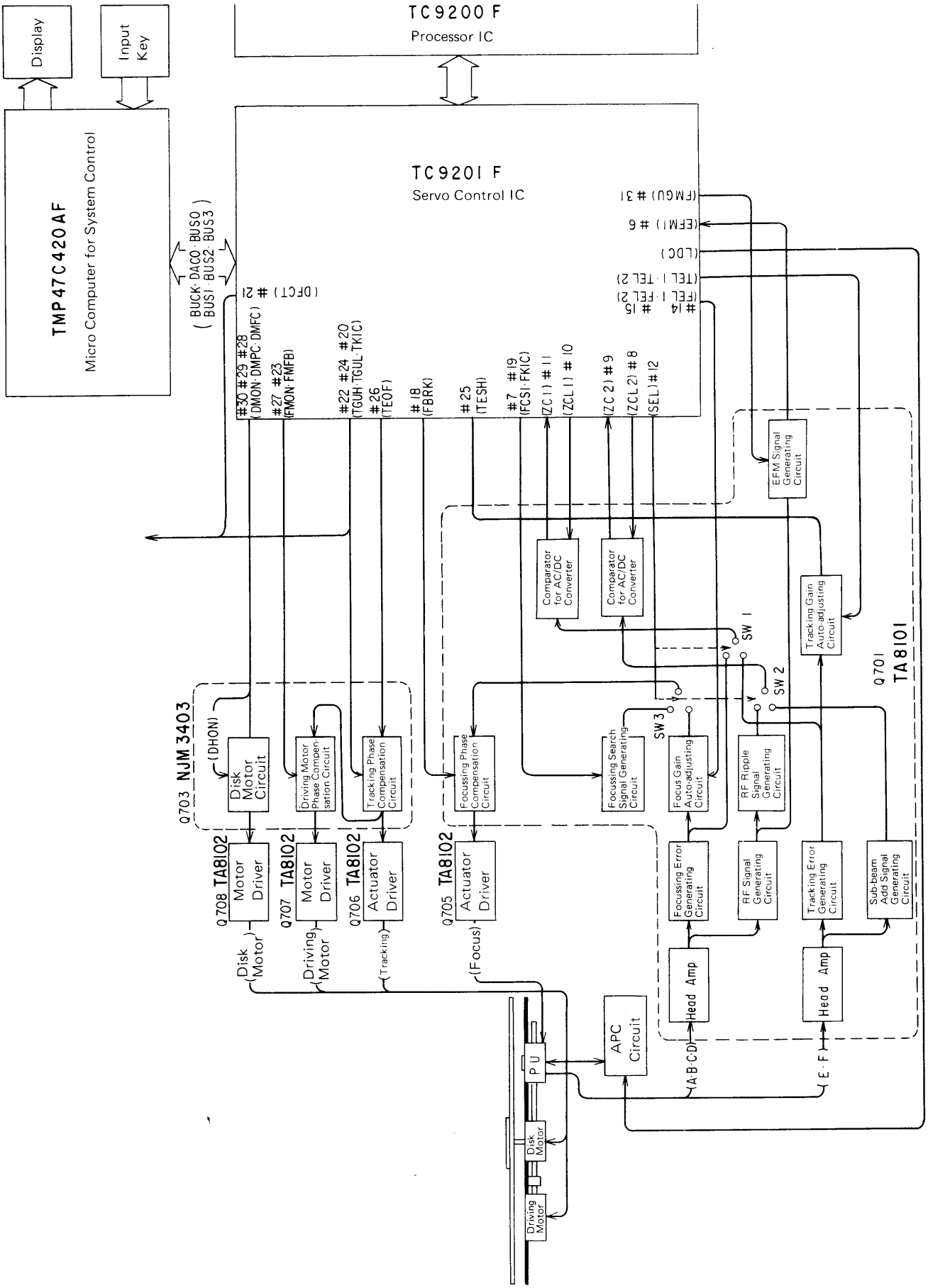

IV. OPERATION OF MAIN POWER CIRCUIT

CIRCUIT OPERATIONS (XR-P9, XR-J9)

1. OPERATION OF POWER SUPPLY CIRCUITRY

Since the XR-P9 is for portable use, there are some measures provided in its power supply circuitry to reduce the power consumption. The circuitry consists of the following four circuits:

1. Power Supply Circuit for Power Transistors
2. Power Supply Circuit for Disc Motor
3. Battery Voltage Sensing Circuit
4. AC/DC Switching Detection Circuit

1-1 When Power is derived from AC Main

When the AC mains are used as the power source, power consumption is of no particular consideration. The regulated DC power supply circuit supplies a 9-volt and a 5-volt power.

- When power is derived from the AC mains, power consumption makes no matter and Repeat and Memory Functions are in operation.

1-2 When Power is derived from Battery Pack (BU-P9)

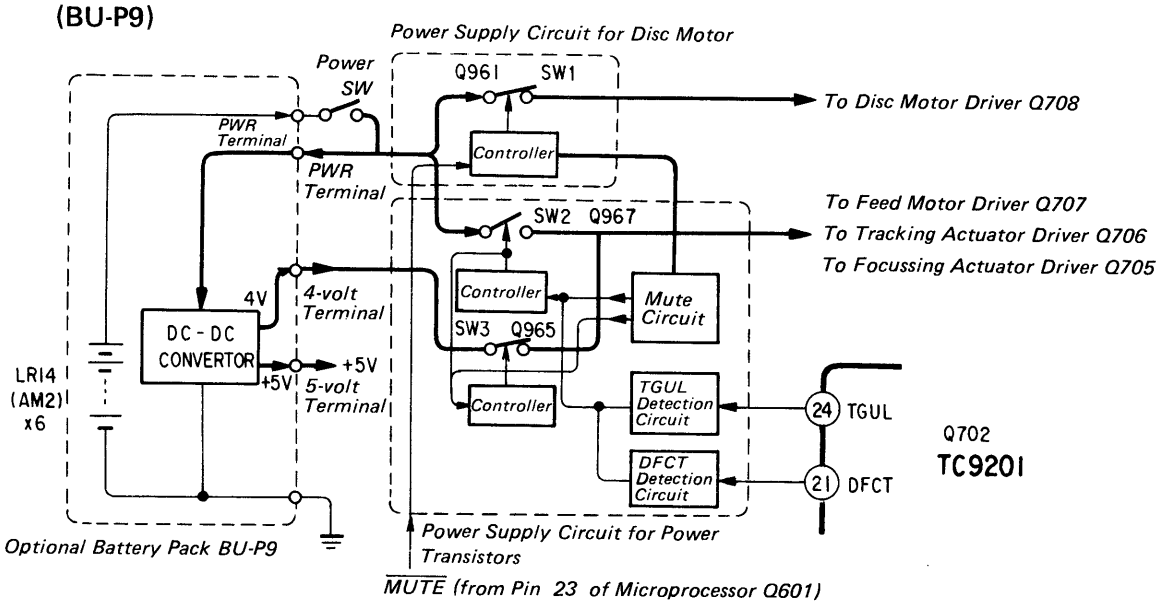

Power Supply Block Circuitry'

1-3 Power Supply Circuit for F/T Servo Driver

(1) This circuit supplies power to Tracking Actuator and Focussing Actuator, and Pickup Feed Motor Drivers (Q705–Q707).

(2) When the CD player is reproducing in normal conditions in the absence of vibration or other kinds of disturbance, tracking and focussing errors exhibit no fluctuation and a dynamic range of 4 volts is enough to drive the tracking and focussing actuators and the feed motor. (In this condition, only one half of the TA8102, a balanced transformer-less driver, is supplied with power.) To reduce the power consumption, the voltage is switched to 9 volts only when the need arises.
The 4-volt power is supplied from the DC/DC converter in the battery pack and the 9-volt power directly from the cells in the pack.

1-4 Power Supply Circuit for Disc Motor

(1) This circuit always applies 9 volts to the motor through the muting switch for the disc motor driver. That is, the higher voltage is applied to the driver to derive a wide dynamic range because the disc motor is sensitive to disturbances paralled to the plane of rotation.

1-5 Battery Voltage Sensing Circuit

(1) The battery voltage sensing circuit is for indicating on the LED that the battery voltage falls by discharge during battery-driving and the circuitry can not operate properly.

(2) In the Normal Play Mode during driving the CD player by the battery, the potential difference between the battery terminals can drop temporarily by the internal impedance (multiplied by the current) when heavy loads mainly from the feed motor or at searching are applied. Considering this apparently empty battery, the battery's life is indicated as follows:

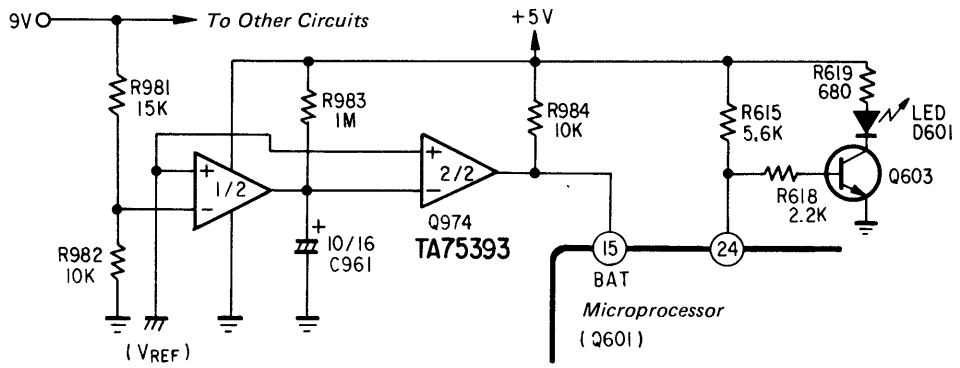

Battery Voltage Sensing Circuit

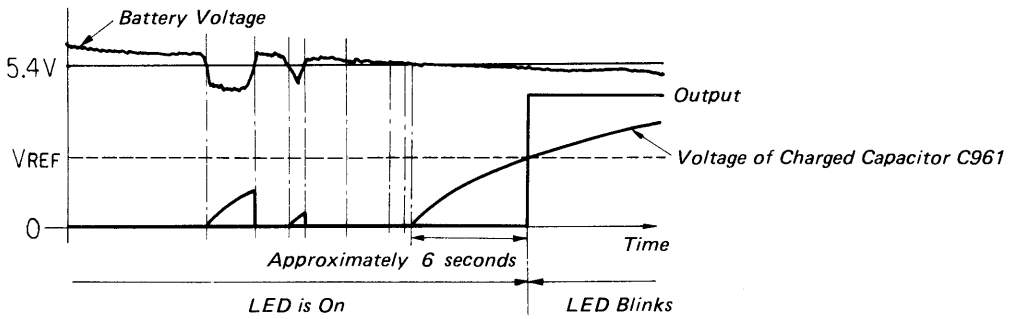

Operation of Battery Voltage Sensing Circuit

(3) The first stage of this circuit is a voltage comparator consisting of R981 and R982, which divide the battery voltage (normaly 9V), and of Q974½, which compares the divided voltage with Vref (2.1 volts with respect to the ground). If the battery voltage is inadequate, the output of Q974½ rises with a time constant determined from R983 and C961. After about 10 seconds of continuous rising, the output exceeds the reference voltage, Vref, and the output of Q974-2/2 becomes low, which enters in Q601 from Pin 15 .

(4) If Q601 receives a low level input at Pin 15 , the output at Pin 24 goes high and low alternately and turns Q603 on and off and the light emitting diode D601 blinks to indicate a dead battery.

(5) When the battery voltage is sufficiently high, Q601 receives a high level input at Pin 15 and delivers at Pin 24 a high level output to turn on Q603, which turns on the diode to indicate the power is on.

1-6 AC/DC Switching Detection Circuit

This circuit informs the microprocessor of from which the power is derived; AC mains or battery (DC). Switching between power sources takes place at the power connector terminals.

(1) When AC Adapter is Used

The 9-volt and 4-volt terminals on the main unit are connected together through the terminals of the AC adapter cord, so a 9-volt power is always supplied to the main unit. In this condition, a high voltage is applied through R976 to the base of Q971, so Q971 is turned on and the input to Pin 39 of Q601 goes low, informing Q601 that the power is derived from the AC mains.

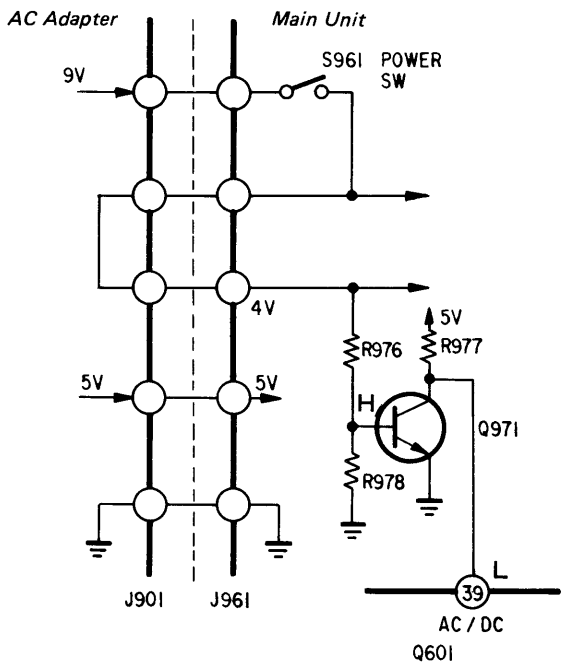

(2) When Battery Adapter is Used

To reduce the power consumption, the battery pack incorporates a DC/DC converter, which produces a 4-volt power. The voltage divided by R976 and R978 turns off Q971 and a high level voltage enters through R977 in Q601 at Pin 39 , informing Q601 that the power is derived from the battery pack.

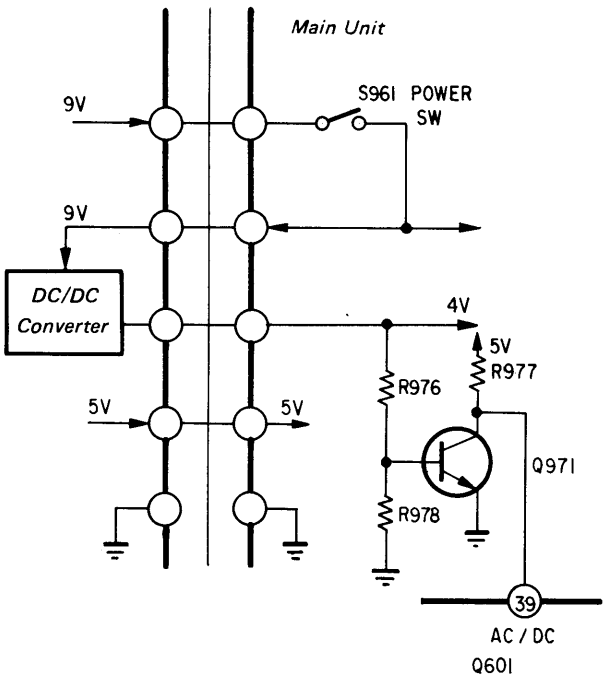

1-7 Usual Operation

(1) Power Supply Circuit in STOP Mode

1 In the STOP mode, Pin 23 of Microprocessor Q601 (TMP47C420AF8663Z) is low and Q962 is off. Transistor Switch Q961 (SW1) is also off and the power line to Disc Motor Driver Q798 is shut.

2 Since Q962 is off, the high voltage through R961 and R962 turns on Q972 and Q973 (2SC2712) and turns off Q966 and Q968, thus turning off Q965 and Q967 (SW3 and SW2) to shut the power line.

Note: The microprocessor system operates on +5 volts.

(2) PLAY and SEARCH Modes

1 In the PLAY mode, Pin 23 of Q601 delivers a high level output which turns on Q962, thus turns on Transistor Switch Q961 (SW1). So Q972 and Q973 are turned off.

(3) Operation in PLAY Mode

1 There are three operations in the PLAY mode. In the NORMAL PLAY mode, Pin 24 (TGUL) of Q702 (TC9201F) is at Vref and Pin 21 (DFCT) is in the high impedance state, so Q968 turns off, thus turning off Q967 (SW2). The voltage through R970, R971, and R968 turns on Q966, thus turning on Q965 (SW3) to supply a +4 volt power.

(4) For Reference (Detailed Later)

1 If a scratch is encountered on the disc surface, Q702 delivers at Pin 21 (DFCT) a reference voltage, Vref, to Q704 to turn it on, thus turning on Q968 and Q967 (SW2) to supply a 9-volt power to Q705 to Q707. Simultaneously, the turn-on of Q968 turns off Q966 which in turn turns off Q965 (SW3) to shut the 4 volt power line.

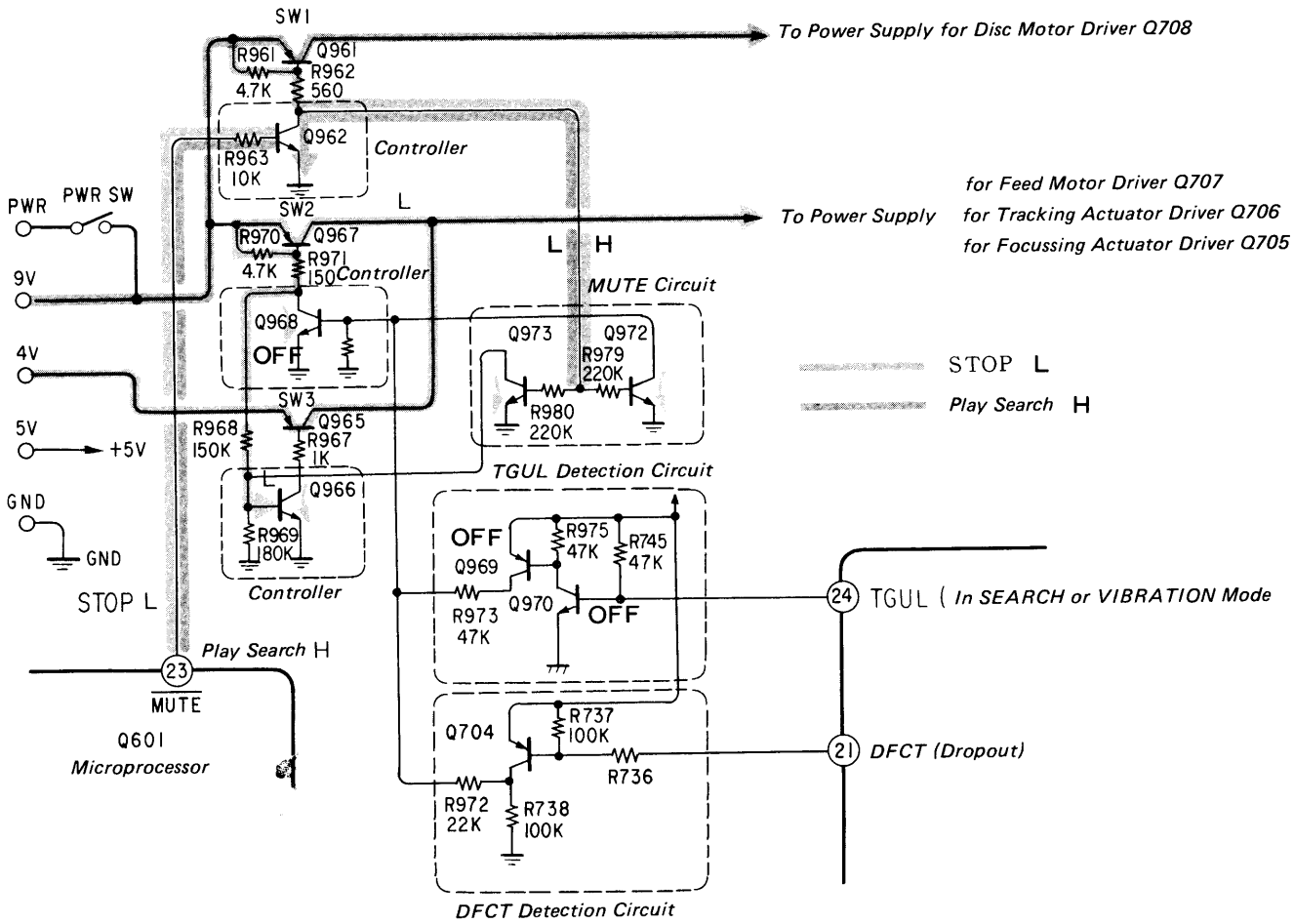

Power Supply Circuits for Disc Motor and for Power Transistors

MODE		Q708 POWER	Q705 ~ Q707 POWER	MUTE (Q601)	TGUL (TC9201)	DECT (TC9201)
STOP		MUTE	MUTE	L (0V)	V_{REF} (2.1V)	HI-Z (OPEN)
PLAY	NORMAL	9V	4V	H (+5V)	V_{REF}	HI-Z
	DEFECT	9V	9V	H	V_{REF}	V_{REF}
	VIBRATION	9V	9V	H	HI-Z	HI-Z
Search (Driving Motor Kick, Actuator Kick)						

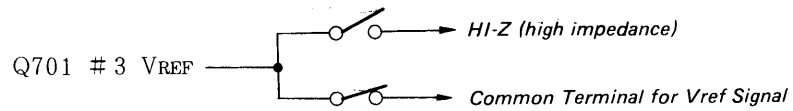

2 If vibration is encountered in the PLAY mode or at a feed motor kick or actuator kick, Pin 21 (TGUL) of Q702 enters the high impedance state, thus turning on Q970 by R745. And, Q969 and Q968 turn on to supply a 9 volt power to the circuits of Q705 to Q707 as in the case of a scratch encountered on the disc surface.

1-8 Operation of Battery Pack (BU-P9)

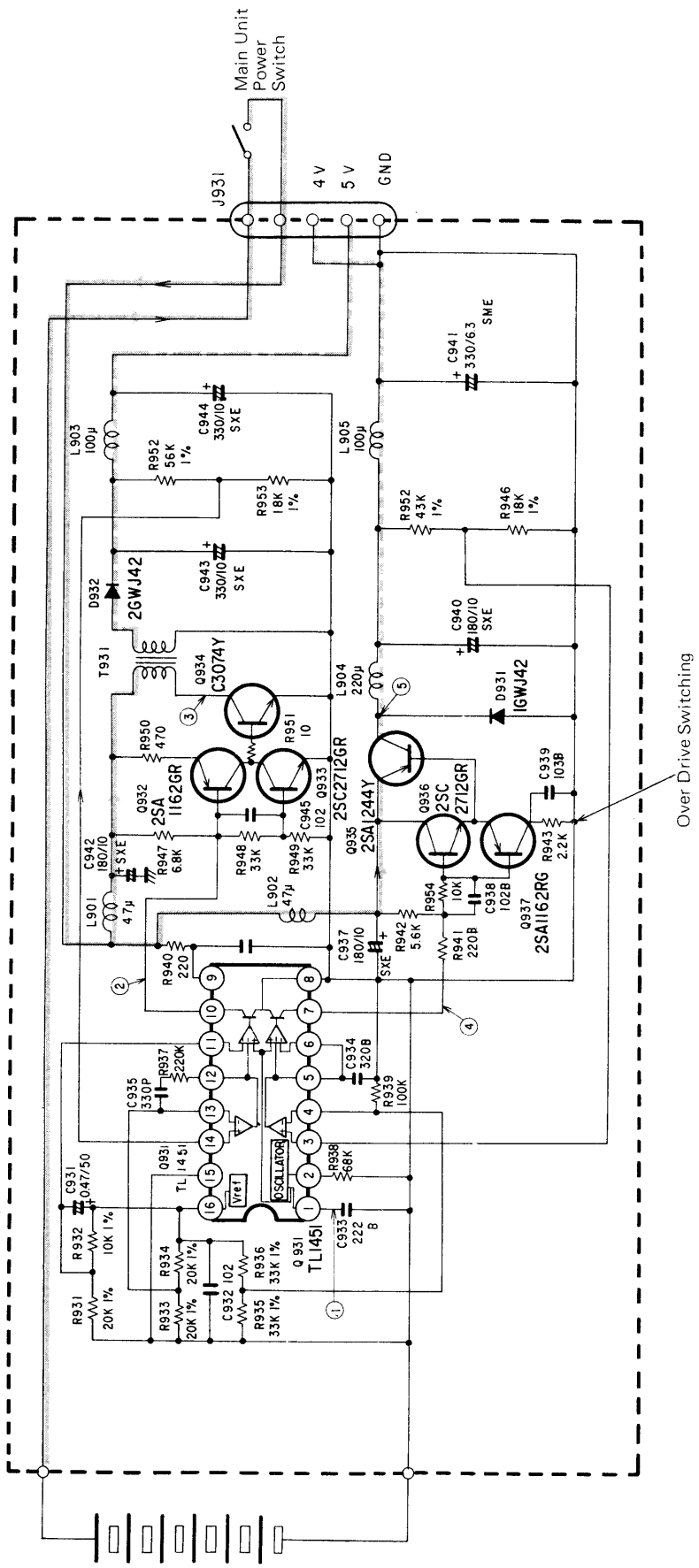

The DC-DC converter is used to produce 4V for the power system and 5V for the signal system from the output of a battery. To produce 4V and 5V from six batteries, a series regulator is generally used. In XR-P9, however, to achieve low power consumption, the DC-DC converter of high conversion efficiency is used. Ordinarily, with a series regulator, the conversion efficiency is about 50% ~ 70%. With the DC-DC converter, it is 80% ~ 90%.

(1) In the DC pack, the two circuits of DC-DC converters are respectively controlled. For this control, clock about 55 kHz (photo 1) determined by C933 and R938 is used. The power supply switch is in XR-P9 proper. The output of the battery is first inputted to XR-P9 proper by J931. Then, through the power supply switch, it is again inputted to the DC-DC converter in the battery box (BU-P9).

(2) The DC-DC converter in the 5V system occupies the upper half of the circuit diagram. The DC-DC converter is of flyback type. It is so transformer controlled that even when the input voltage (battery voltage) has dropped to 4V, 5V is produced at the output terminal. In BU-P9, the DC-DC converter is PWM (pulse width modulation) controlled, so that it controls the on time of transistor Q934 to keep the output voltage constant. Switching waveform of Q934 is shown in photo 3.

(3) The output voltage is voltage divided with R952 and R953 and inputted to control IC Q931. With the internal operation amplifier and comparator, a signal to control the transistor Q934 is thus outputted at No. 10 terminal (photo 2). With this signal, Q934 is controlled by Q932 and Q933, so that there forms a servo loop to constantly produce 5V.

(4) In the 4V system, in the chopper type DC-DC converter the input voltage (battery voltage) is sliced and smoother by Q935 to lower the level so that 4V is produced. In the circuit, the output voltage is voltage divided by R952 and R946 and inputted to Q931. With the internal operation amplifier and comparator, a signal to control Q935 is outputted at No. 7 terminal (photo 4). With this signal, Q935 is thus controlled by Q936 and Q937 so that there forms a survo loop to constantly produce 4V (photo 5).

(5) On the on side of the overdrive switch (4V), by extending the base current in Q935 to the saturation region, the swiching loss is reduced.
Q936 is a switching transistor to turn off Q935 and Q937, to turn it on. Q932 and Q933 on the 5V side operate similarly.

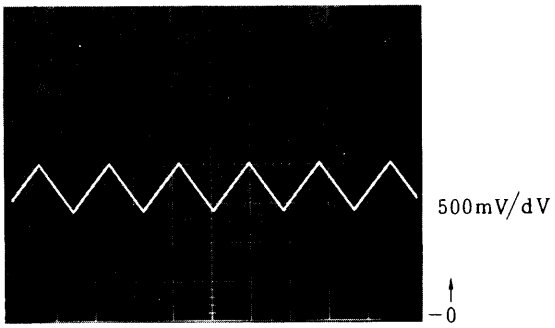

Figure 1

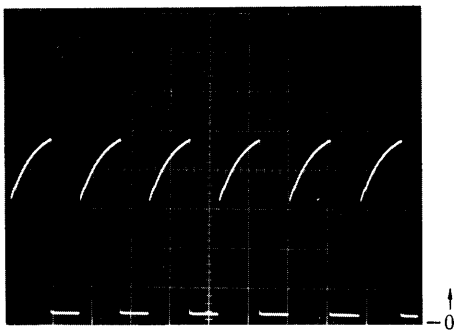

Figure 2

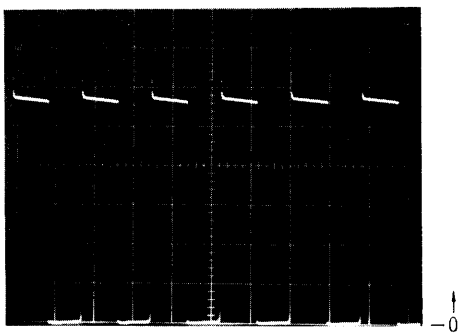

Figure 3

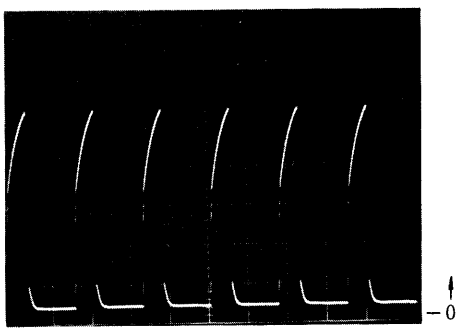

Figure 4

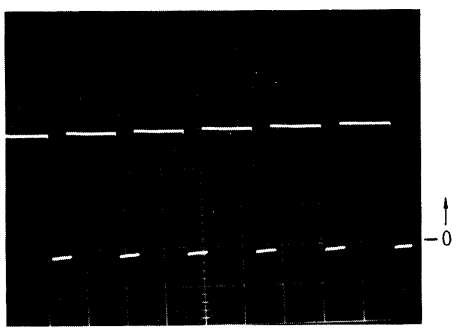

Figure 5

2. RESET, MUTING, AND EMPHASIS CIRCUITS

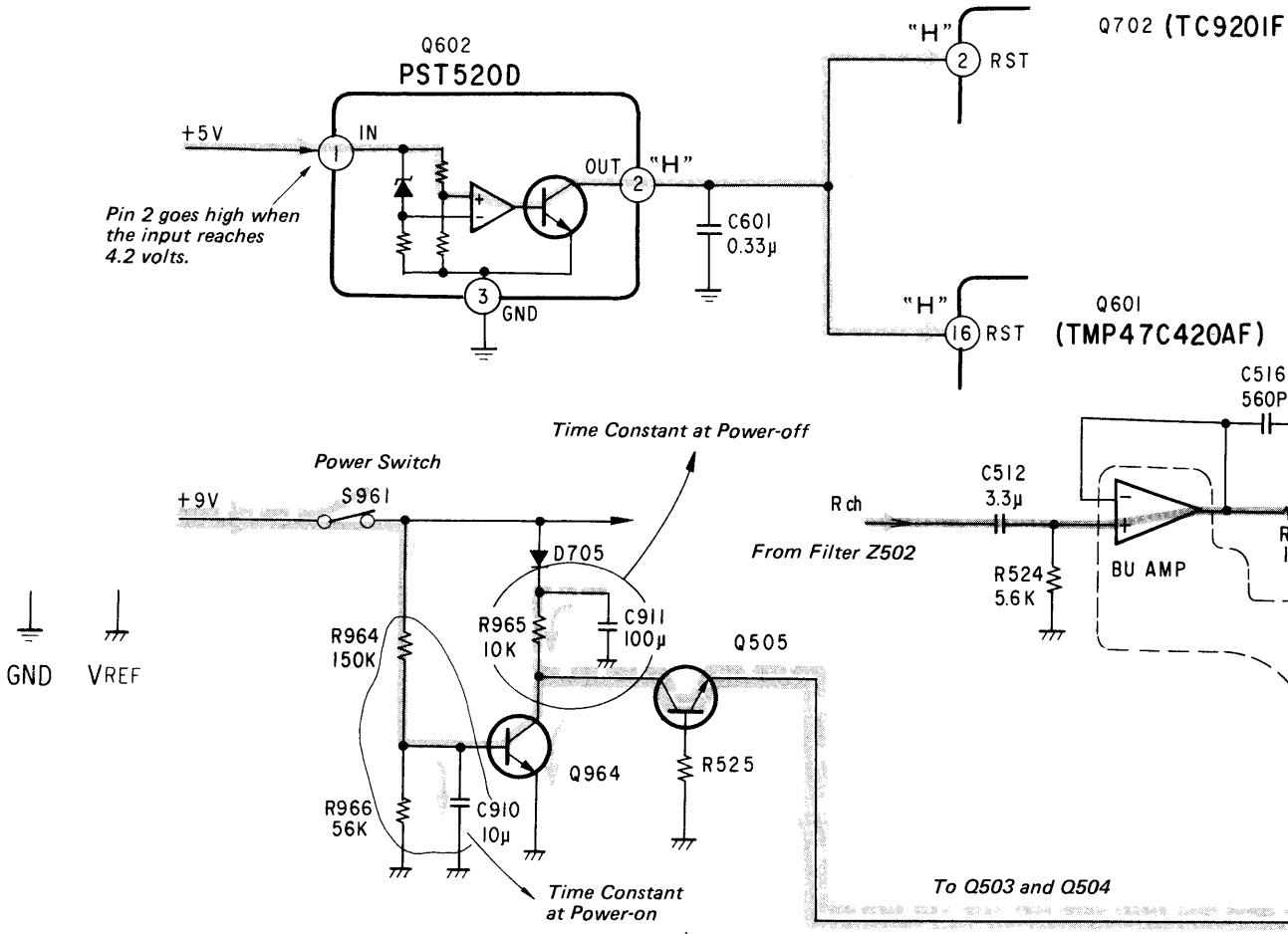

- The RESET and MUTING actions are instantaneous actions taking place at power-on and power-off.

2-1 Reset Action

(1) The +5 volt power is applied to Pin 1 (IN) of Q602. When this power line voltage reaches the Zener voltage of 4.2 volts at power-on, a high level output is delivered at Pin 2 (OUT) and enters Q702 from Pin 2 (RST) and Q601 from Pin 16 (RST) to reset this microprocessor.

2-2 Muting Action

(1) This circuit takes an instantaneous action at power-on and power-off. At power-on, Q964 is off for about one second with the time constant determined by R964, R966 and C910 and its output is fed through Q505 to the base of Q504 to turn it on, thus muting the audio signal.

(2) At power-off, the charge on Capacitor C911 of 100 µF flows through R965 and Q505 and turns on Q504 for about one second for muting.

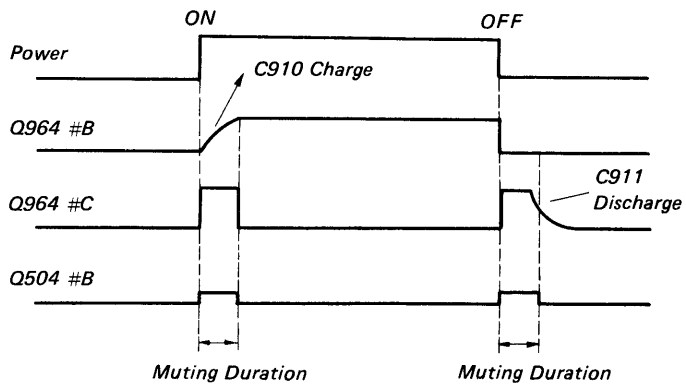

2-3

(1) W
ra
at
te
en
(L
de
(2) Q
de
Pi
Pi
er
fr
fe
at
18
ta
fi
au
(3) W
tu
ar

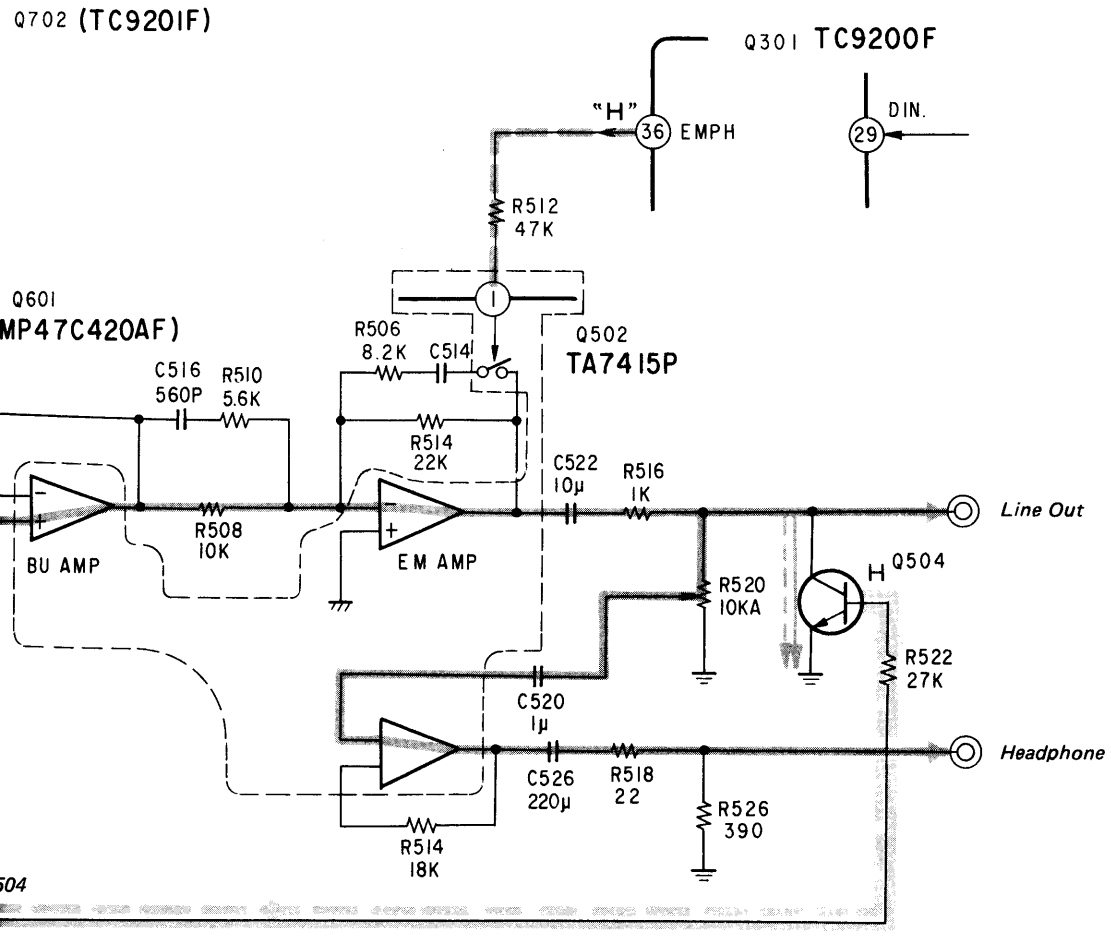

2-3 Operation of Emphasis Circuit

(1) With Compact Discs, the high-frequency level can be raised at recording and lowered by the same amount at playing to obtain a good high-frequency characteristic. This technique is called emphasizing and a emphasized disc contains empasis data in the subcode. (Lowering the high-frequency level at playing is called de-emphasizing.)

(2) Q702 receives the EFM signal at Pin 6 (EFMI) and deliveres data at Pin 47 (DOUT, i.e., data out) to Pin 29 (DIN) of Q301. Q301 read the data and Pin 36 (EMPH) goes high if the data contain the emphasis signal. This high level output enters Q502 from Pin 1 and turns on the switch of the emphasis feedback circuit, bringing the high-frequency attenuator consisting of R506 of 8.2K ohms and C514 of 1800 picofarads into operation. The amplifier then takes on the frequency characteristic shown in the figure, de-emphsizing or attenuating high frequency audio signals.

(3) When playing a not-emphasized disc, the switch is turned off and the EM amplifier operates as a flat amplifier.

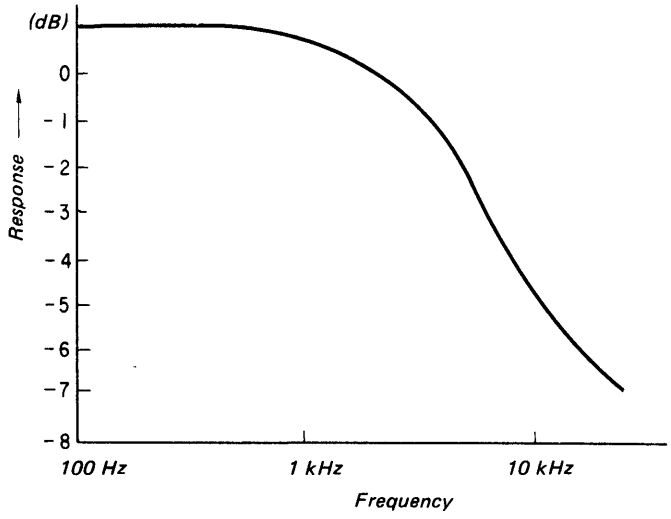

3. OPERATION OF APC (AUTO POWER CONTROL) CIRCUIT

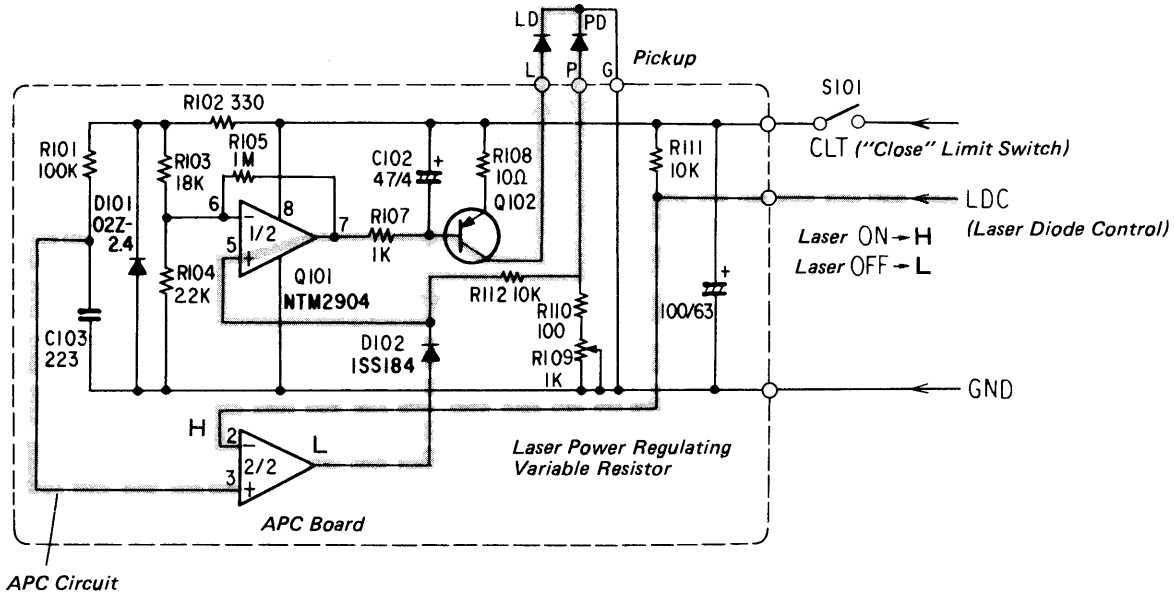

The pickup has a laser diode and a p-i-n photodiode contained in one packge; the p-i-n photodiode is for monitoring the laser power and its current is used by the APC circuit to regulate the laser diode for a constant laser power. This APC circuit is controlled by the LDC signal. Since the power to this circuit is turned on and off by CLT ("Close" Limit Switch), it is not powered until player's cover is closed.

The APC circuit acts as a servo for the laser beam intensity and operates as follows:

1 When a laser beam is emitted, the p-i-n photodiode delivers current which is converted into voltage by R110 (100 ohms) and Variable Resistor R109 (1K ohm).

2 The converted voltage enters the (+) terminal of Operational Amplifier Q101½. The (–) input voltage is produced by Zener Diode D101, R103, and R104 as the reference with which the (+) input voltage is compared. The output of the operational amplifier is delivered across R107 to Q102 (2SA1213) which drives the laser diode.

3 The laser power is adjusted by turning Variable Resistor R109 which varies the voltage to the (+) input terminal of Q101½.

4 Capacitor C102 protects the laser diode from overcurrent before the servo takes over. When the LDC signal goes high, the capacitor together with R102 restricts the current to the laser diode with a time constant being the product of the C102 capacitance and R107 resistance.

5 Capacitor C103 protects the laser diode from the voltage overshoot occuring at power-on. Q101-2/2 delivers a high level output for the period from the power-on to the time constant determined by R101 and C103, thus delaying the servo loop's starting operations.

Flow of Signal at Focus Servo and Focus Search

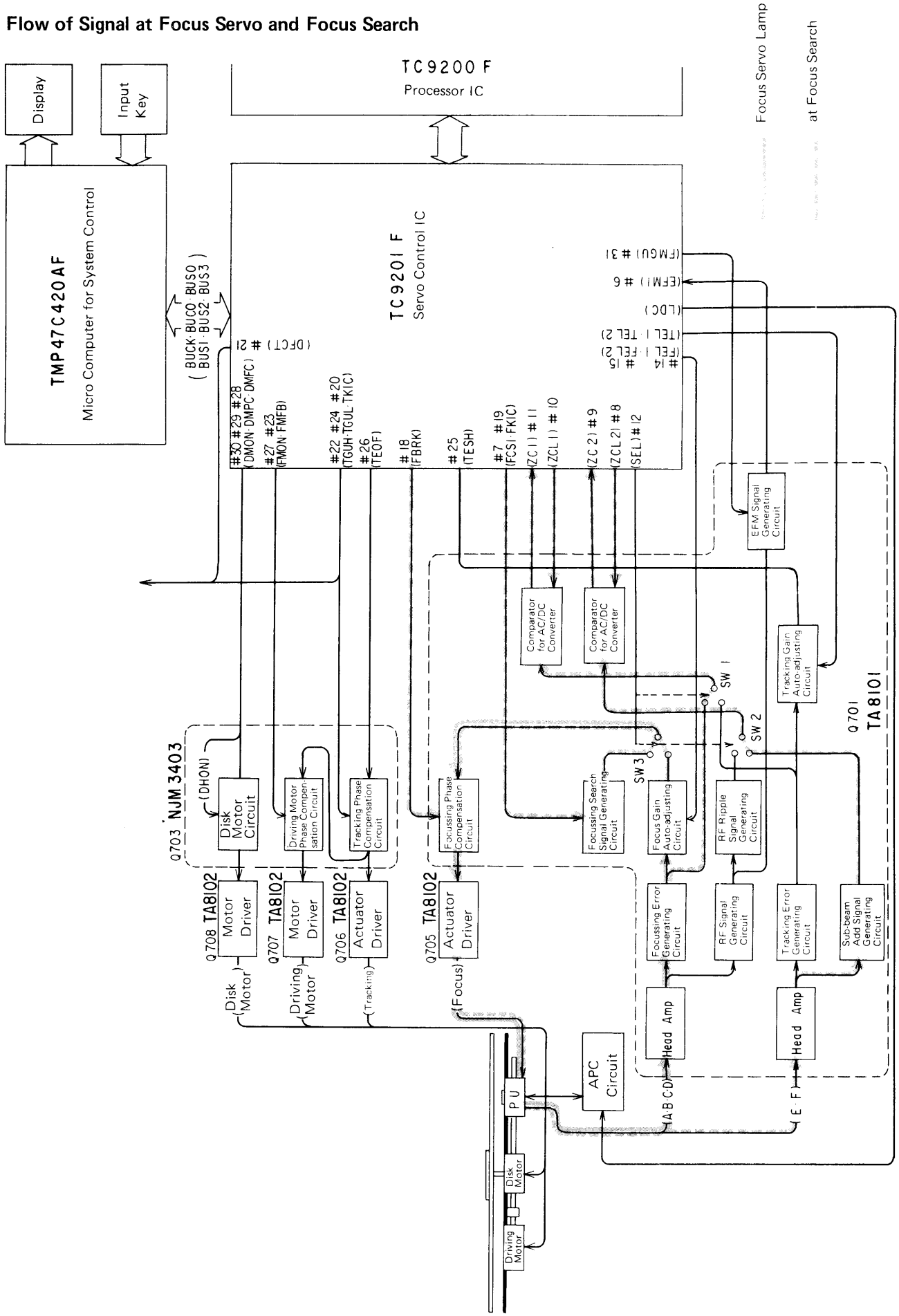

4. OPERATION OF FOCUSSING SERVO CIRCUIT

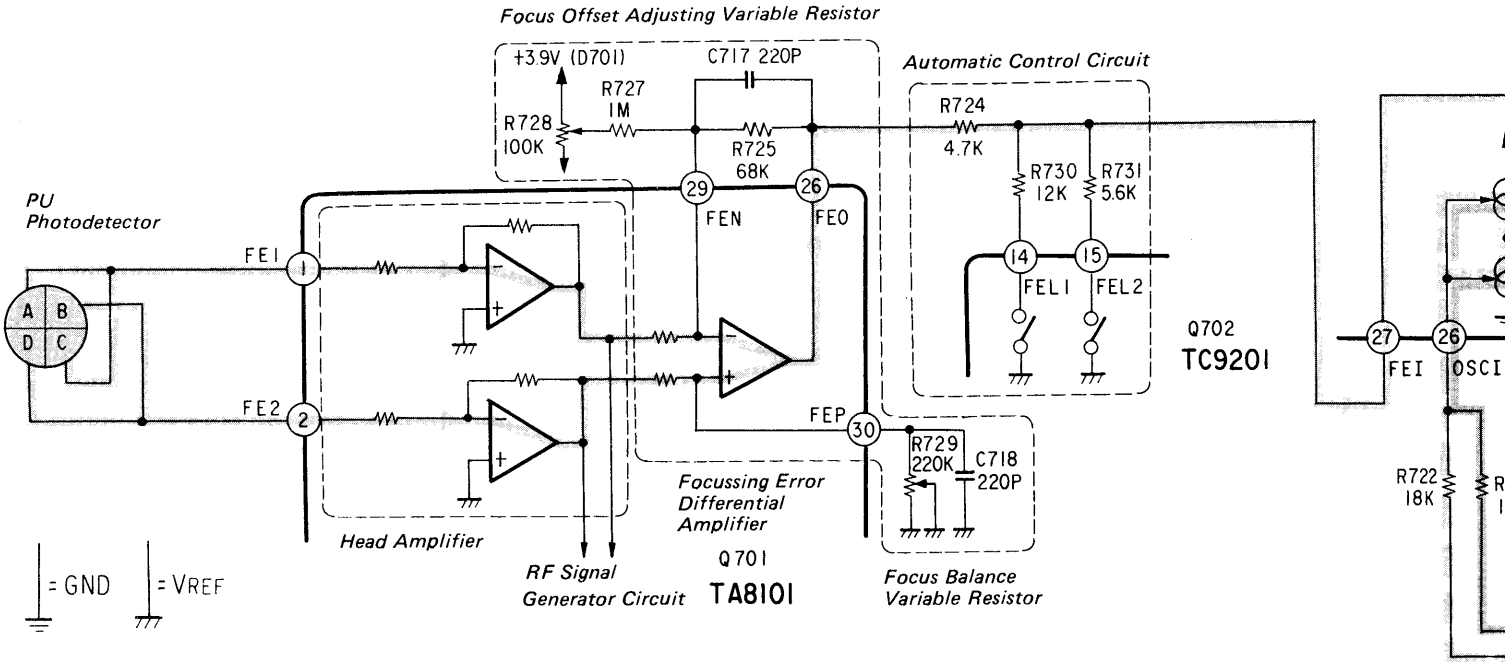

4-1 Focussing Error Detection and Focussing Servo Circuit

(1) The photodetector in the pickup delivers four current outputs which add diagonally, A + D and B + D. These current signals enter the head amplifier in Q701 and converted into voltage signals, which are fed to the operational amplifier to make an error signal.

(2) The operational amplifier is controlled by two variable resistors (VRs) connected to its input terminals: Focus Off-set Adjusting VR, R728, and Focus Balance VR, R729.

(3) The error signal delivered from the operational amplifier leaves Q701 at Pin 26 (FEO), passes through Automatic Gain Control Circuit, and enters Q701 as a focussing error signal from Pin 27 (FEI). Within Q701, the signal passes through a and enters FSO Amplifier.

(4) The signal amplified by FSO Amplifier leaves Q701 at Pin 23 (FSO), passes through R716, and drives the focussing coil.

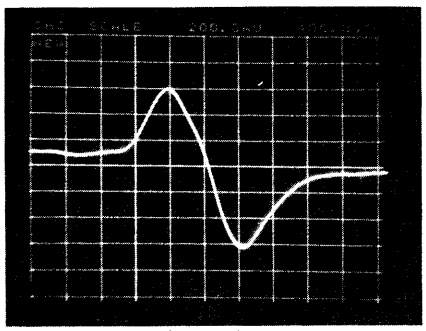

Range of Focus Error Detection

This waveform appears when the actuator (i.e., the light source) is appraches the disc.

4-2 Focus Search

(1) A 1-Hz, 1-cycle signal is delivered from Pin 19 (FKIC) of Q702, immediately followed by a 1-Hz (or 2-Hz), 3-cycle signal delivered from Pin 7 (FCSI).

(2) These signals pass through R723 and R722 separately and enter Q701 from Pin 26 (OSCI). Within Q701, the signals are fed to FS OSC (Focus Search Ocillator) the output of which passes through SW4 and is amplified by FSO AMP to drive the focussing coil.

(3) When the disc in the tray becomes in focus (i.e., FOK), Pin 12 (SEL) of Q702 turns from the high level to the high impedance state. This signal enters Q701 from Pin 20 (SEL), and turns on SW3 and off SW4 (see Block Diagram).

(4) Pin 18 (FBRK) of Q702 is for applying a brake on the focussing coil (otherwise called the focussing actuator). The focussing brake circuit is provided for decelerating the focussing speed of the actuator, which is brought into the acceleration state by a focus search signal, so that the laser beam can be focussed on the disc smoothly.

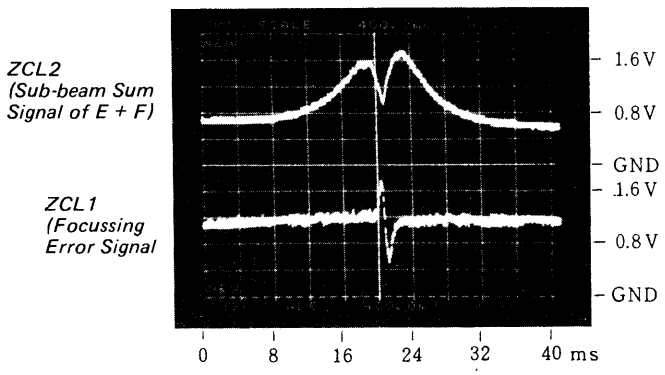

Focussing Error Signal and Sub-beam Sum Signal

During
exceed
crossin
decele
held i
This p
contro

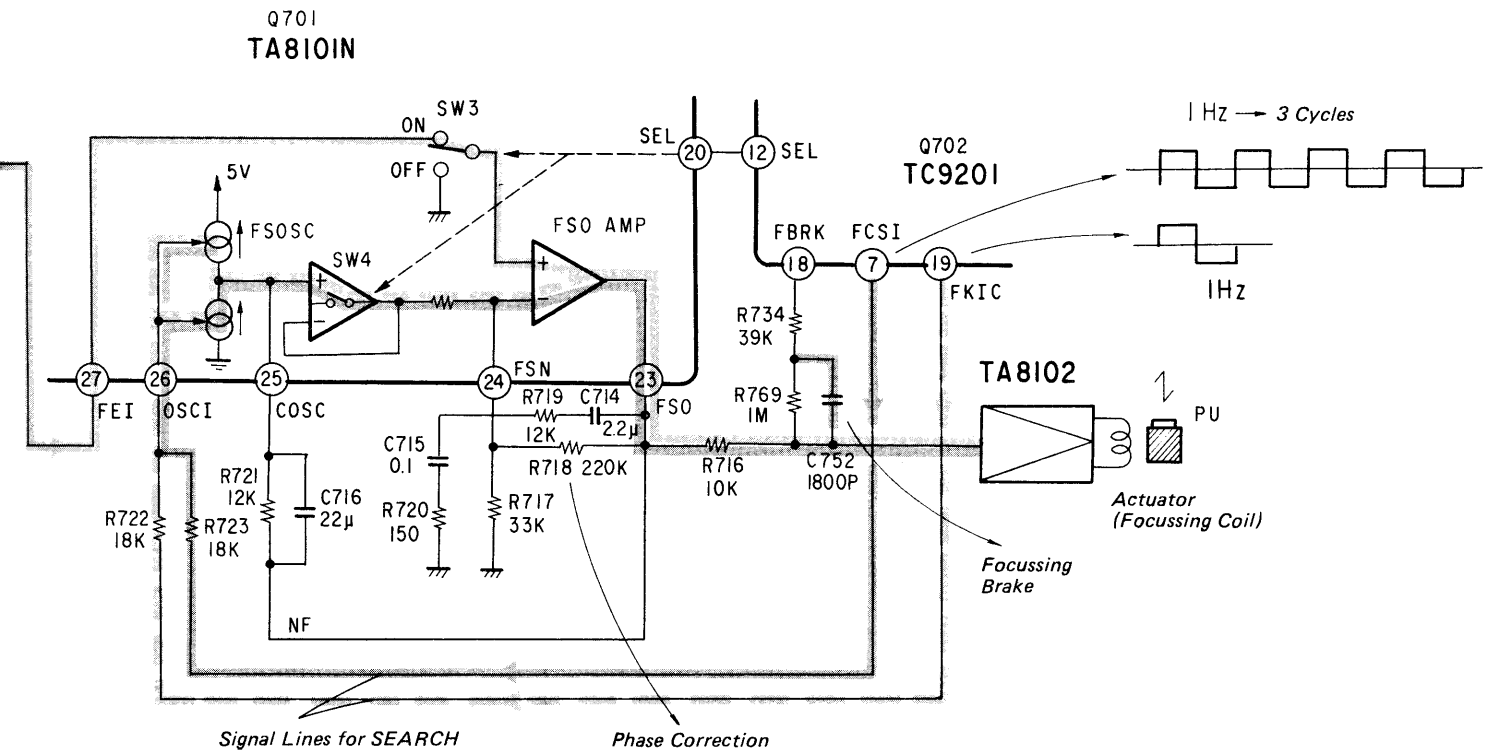

During the period from the moment the ZCL1 signal exceeds the FOK discrimination level to the signal's zero-crossing, Q702 delivers a pulse at Pin 18 (FBRK) to decelerate the speed of the actuator which at that time is held in the acceleration state by the focus search signal. This pulse makes it easy for the actuator to enter the controllable range of the focussing servo.

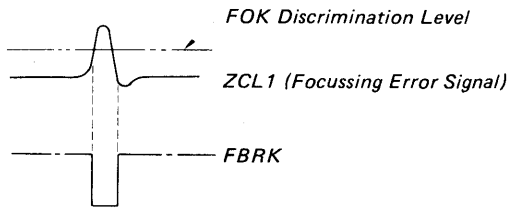

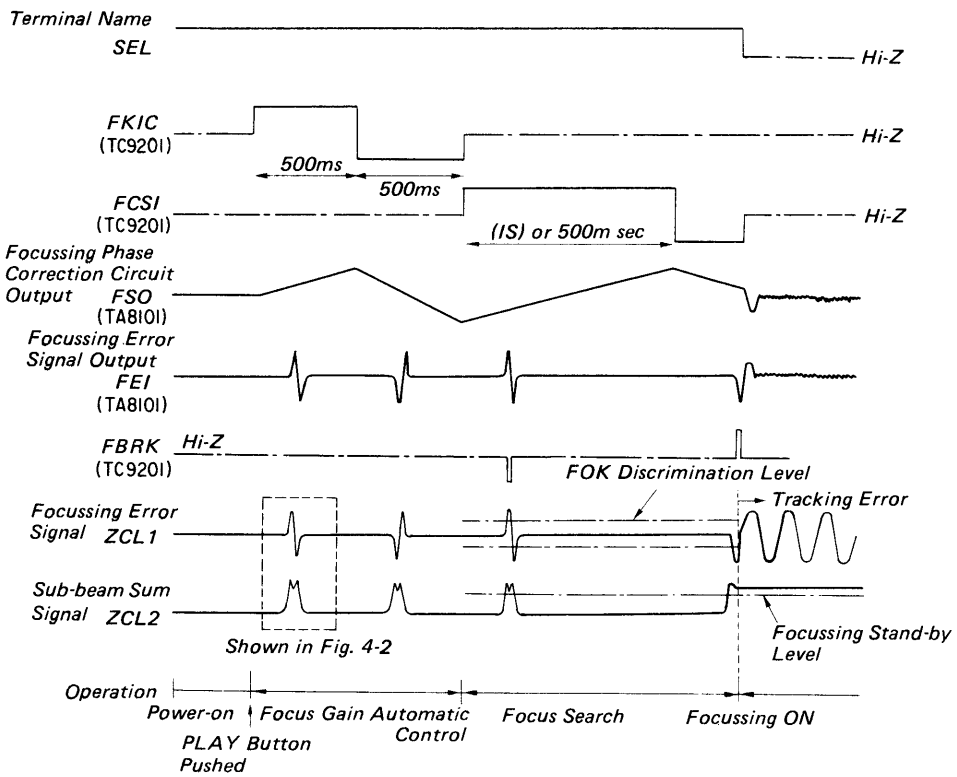

Timing at Focus Searching

Flow of Signal at Tracking Servo and Driving Motor

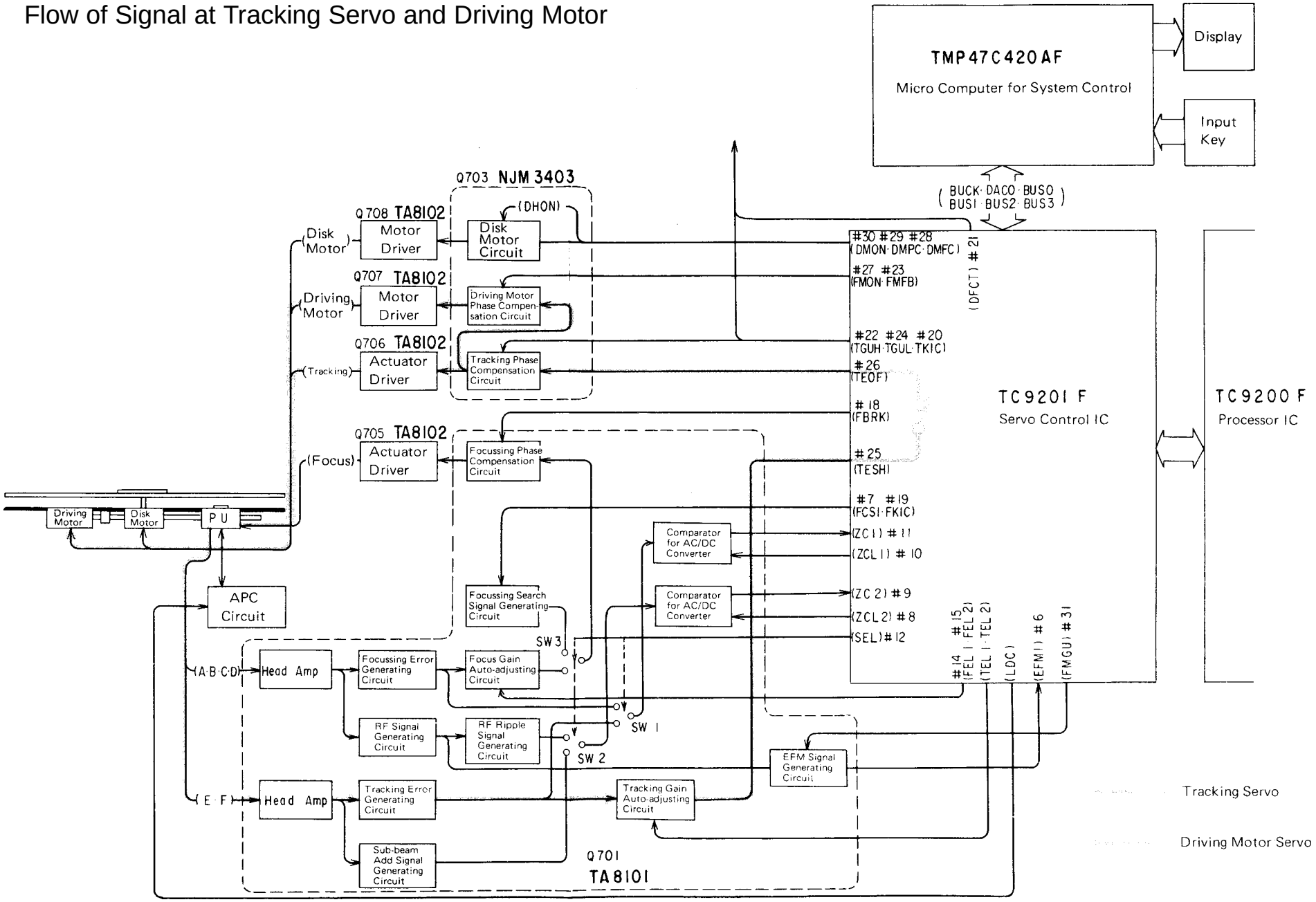

5. TRACKING SERVO CIRCUIT

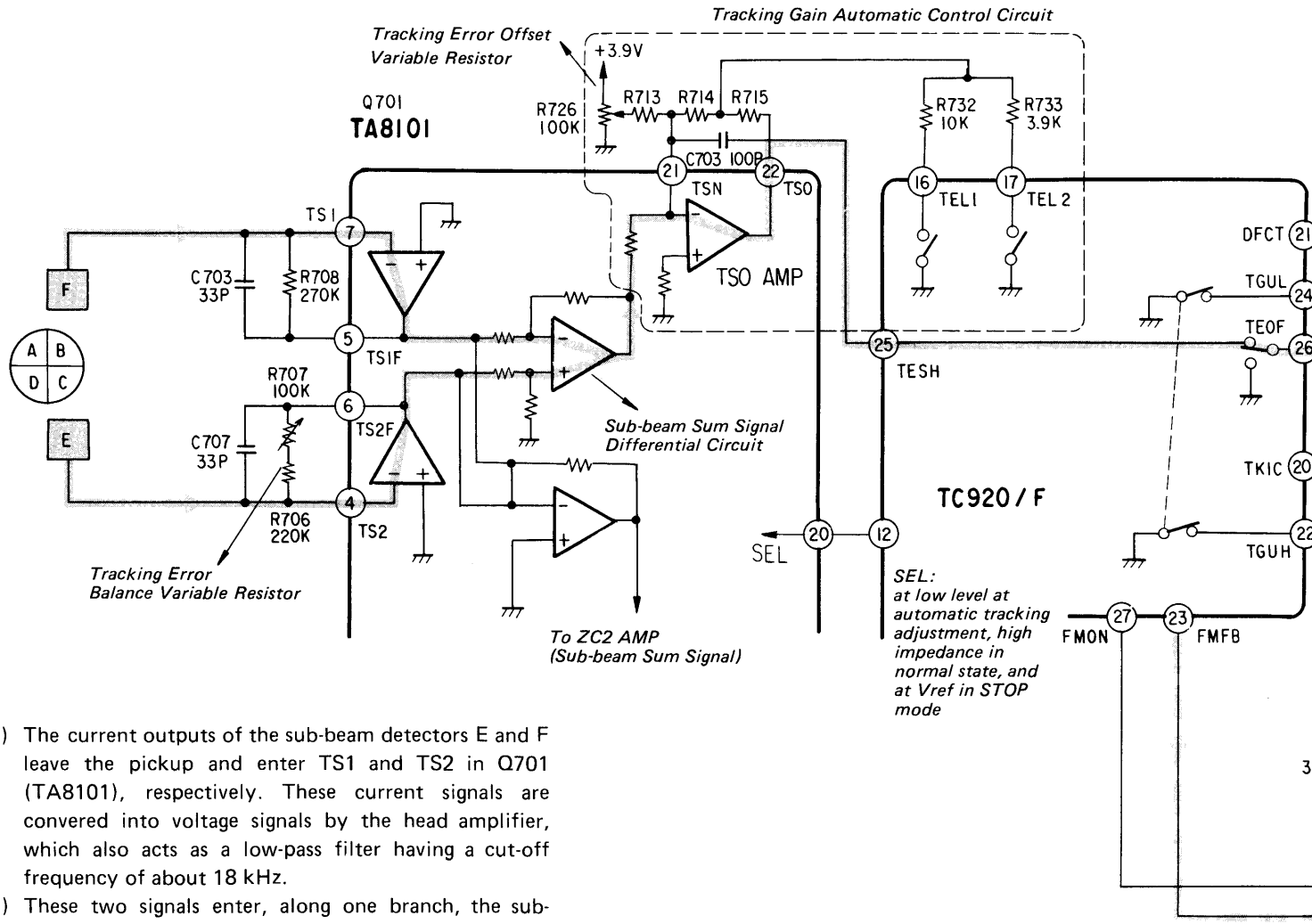

(1) The current outputs of the sub-beam detectors E and F leave the pickup and enter TS1 and TS2 in Q701 (TA8101), respectively. These current signals are convered into voltage signals by the head amplifier, which also acts as a low-pass filter having a cut-off frequency of about 18 kHz.

(2) These two signals enter, along one branch, the sub-beam sum signal differential circuit which combines them into a sum signal and delivers it to Pin 9 (ZC2) of Q702; they also enter, along the other branch, the tracking error differential circuit which combines them into a difference signal and feeds it to the TSO amplifier. The output of the TSO amplifier, or the tracking error signal, is kept at 0.8 Vp-p by the attenuator of TEL1 and TEL2 of Q702 #16 and #17 of the tracking gain automatic control circuit.

(3) The automatic control of tracking gain takes place immediately before the player enters the PLAY mode from the STOP mode after FOCUS ON.

(4) This automatic control is done by the tracking coil which deflects the laser beams to the right and left across the track so that a tracking error signal is produced.

(5) Photograph shows the waveform at the tracking coil end; a centrifugal kick for 5 miliseconds and then a centripetal kick for 7 miliseconds, and after about 30 miliseconds of stand-by the tracking action takes place.

(6) The automatic tracking gain control takes place immediately after the centripetal kick has finished and the waveform then is shown in Photograph. At this moment, the tracking error signal level becomes 0.8 Vp-p.

(7) During automatic tracking gain control, the SEL terminal is at low level and the internal switch is switched to TSO AMP. The tracking error signal appearing at Pin 22 (TSO terminal) of Q701 is fed to Q702 within which TEL1 and TEL2 (#16 and #16) are controlled according to the signal's data so that the tracking error signal amplitude is kept at 0.8 Vp-p.

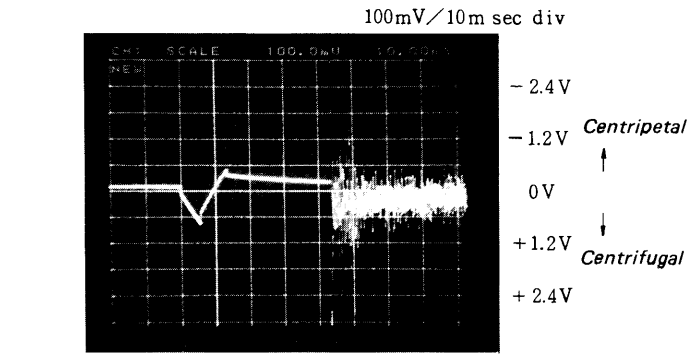

Waveform at Tracking Coil End

(8) A
th
sc
(2

Wavefor

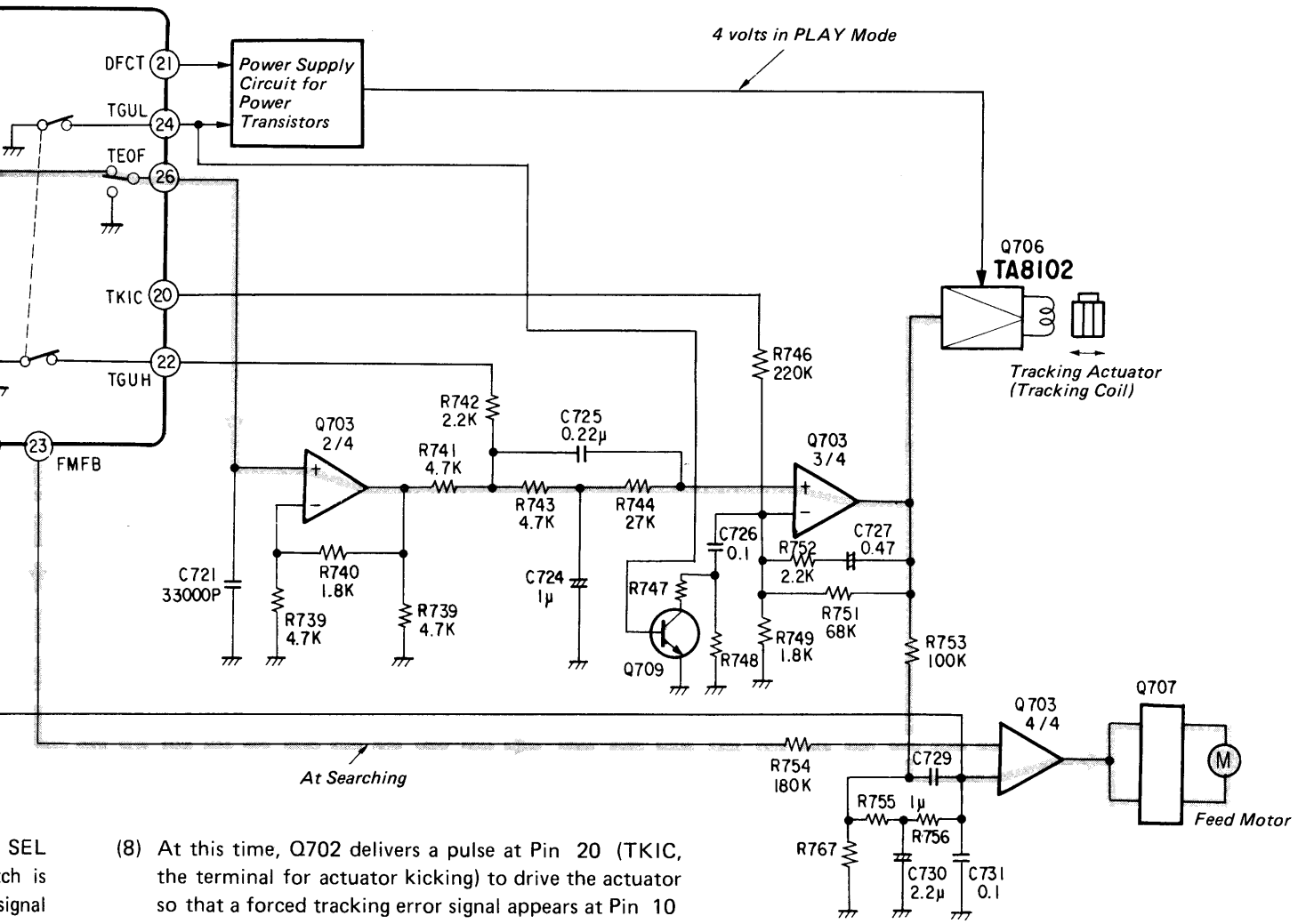

(8) At this time, Q702 delivers a pulse at Pin 20 (TKIC, the terminal for actuator kicking) to drive the actuator so that a forced tracking error signal appears at Pin 10 (ZCL) and the automatic control data are held.

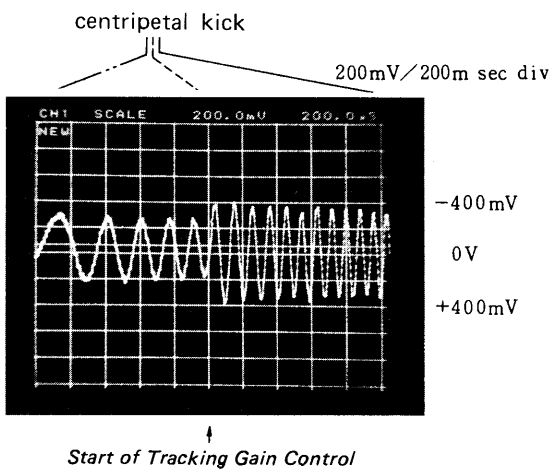

Waveform of Tracking Error at TSO Terminal

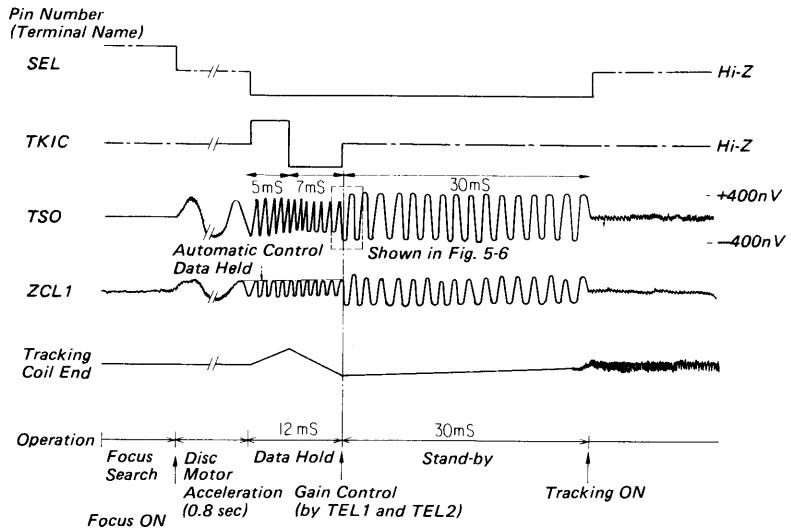

Waveform at Various Part at Automatic Tracking Gain Controlling

6. OPERATION OF PU DRIVING MOTOR SERVO CIRCUIT

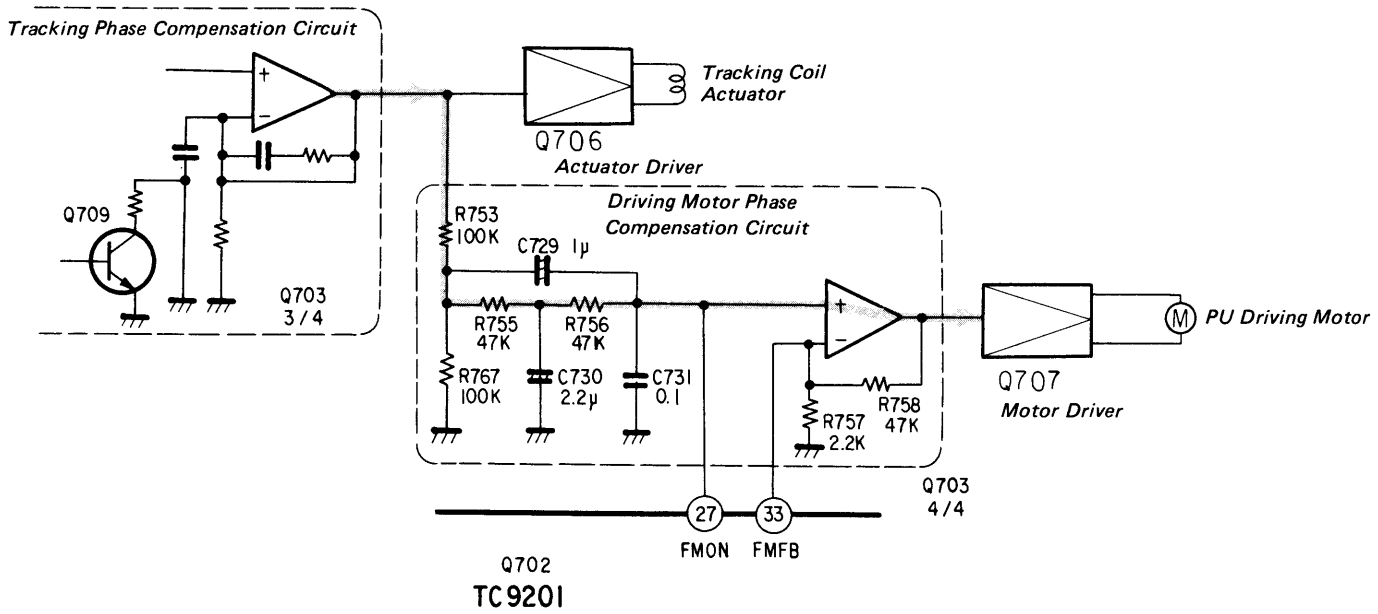

☆ With the PU feed motor servo circuit, the pickup is moved in the direction of tracking and the tracking coil in the pickup is placed constantly in the tracking range (to produce output signals properly) ±400μm.
The tracking actuator in the pickup is capable of following the signals only for ±400μm in the track direction. On the disc, however, signals are in between radius 22 mm and 58 mm. To read them, the pickup feed motor mechanism is used.

In the PU feed motor servo, as shown in the figure, a signal is taken from the output of the Q703 tracking phase compensation circuit. With this signal, in the motor phase compensation circuit, only the eccentric component (i.e. low frequency component of the tracking servo signal) is taken and so the PU feed motor is driven.

Flow of Signal at Defect and Oscillation Detection

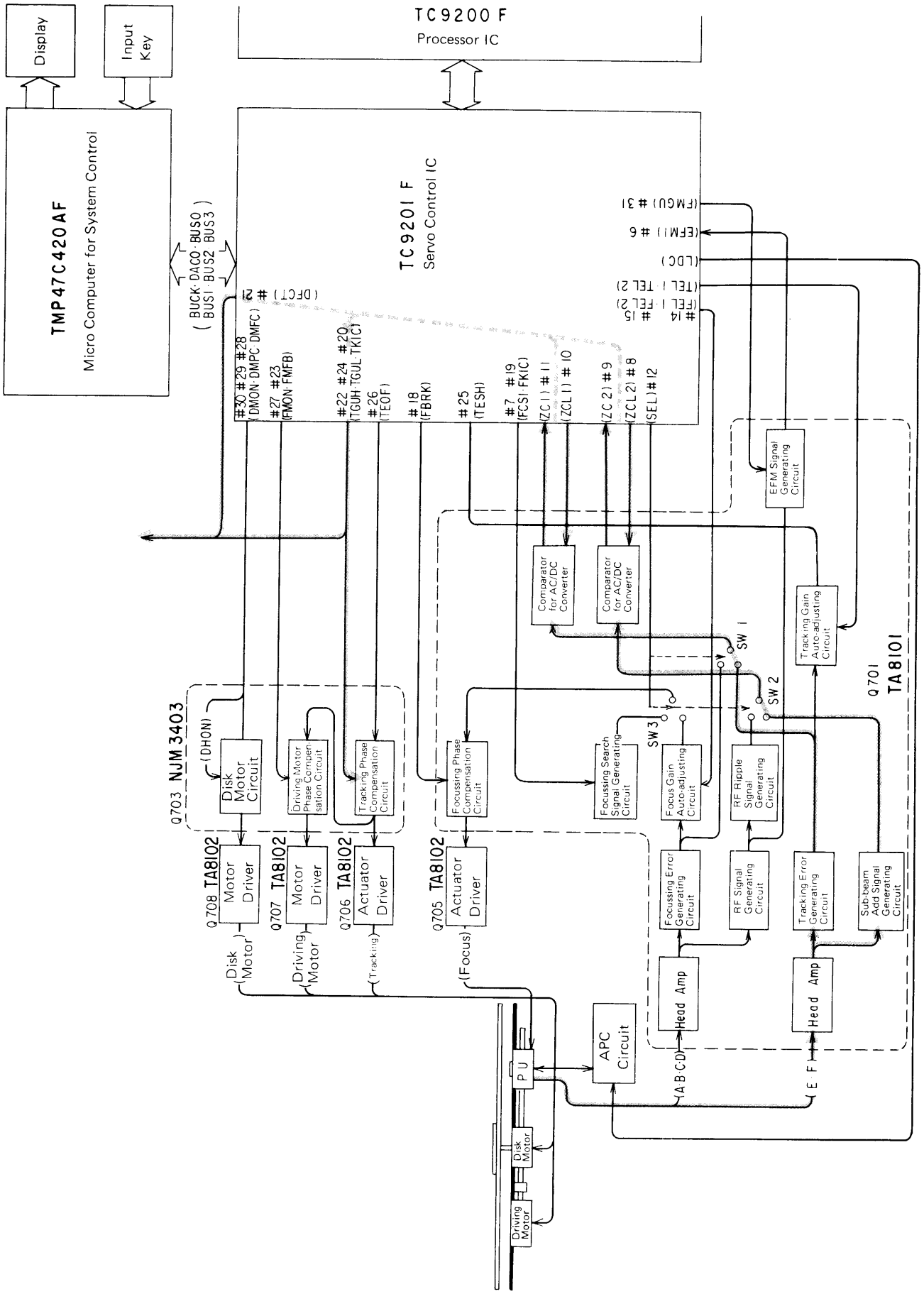

7. SERVO CONTROL AT DEFECT (DROPOUT) AND VIBRATION

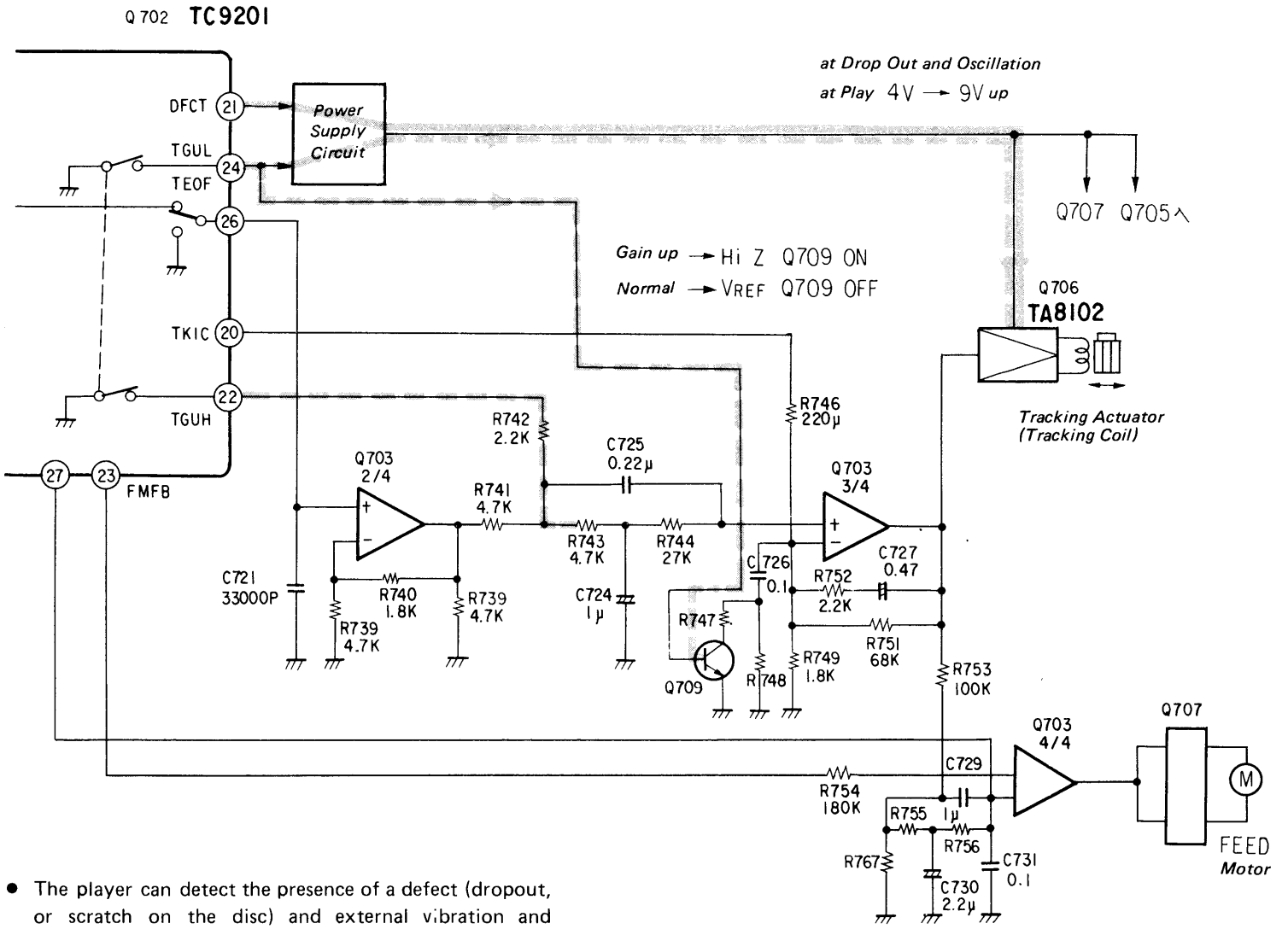

- The player can detect the presence of a defect (dropout, or scratch on the disc) and external vibration and performs servo controlling.
  The detection function is active during the PLAY mode and the continuous monotoring of the tracking error and sub-beam sum signals for fluctuation provides discrimination between a dropout and vibration.

7-1 At Dropout

(1) When a dropout occurs, Pin 21 (DFCT) of Q702 TC9201 is switched from high-impedance (4.4V) to Vref (2.1V). This causes the power supply circuit for power transistors to switch from 4V to 9V, that is, the supply voltage to Drivers Q705 to Q707 is raised. The dynamic ranges of the drivers are thus widened and the player adapts itself to the dropout.

7-2 At Vibration

(1) TGUH and TGUL Switches (#22 and #24) in Q702 TC9201 turn off and Pin 22 becomes high-impedance so that R742 becomes open-ended and the gain of the tracking servo loop is increased.

(2) Pin 24 (TGUL) also becomes high-impedance and the power supply circuit for power transistors switches from 4V to 9V, that is, the supply voltage to Q705 to Q707 is raised.

(3) The high-impedance output (2.7V) at Pin 24 enters the base of Q709 and turns it on. For 8 miliseconds after the detection of vibration, Q709 increases the tracking gain by about 8 dB and the voltage to 9V to switch the phase correction constant of Q703. The player thus becomes insensitive to vibration.

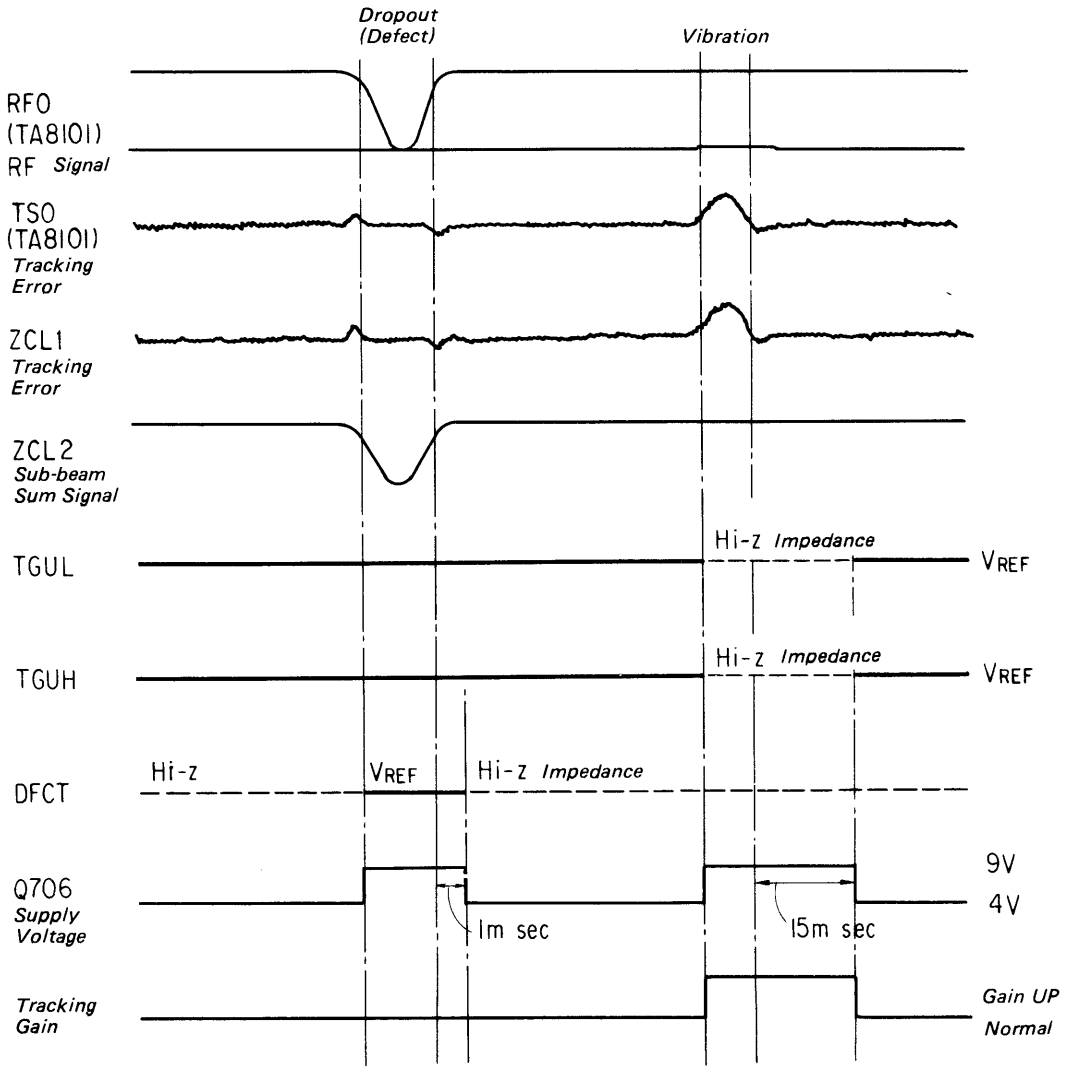

Timing Chart at Dropout and Vibration

Note: This model differs from Model XR-Z70 in dropout treatment, as follows:

- When a scratch is encountered on the disc, the focussing error signal as shown in the figure below is generated.

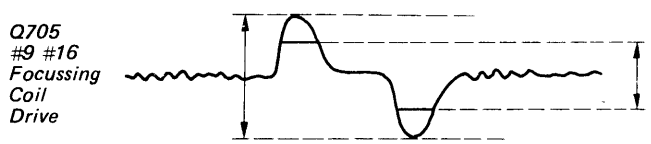

During 4-volt operation, the waveform is clipped at that voltage.

After switching to 9-volt operation, the signal does not suffer clipping so that the beam can trace the proper track, making the player insensitive to scratches on the disc. This is why the supply voltage to Q705 to Q707 is switched from 4V to 9V.

Flow of Signal at CLV Servo

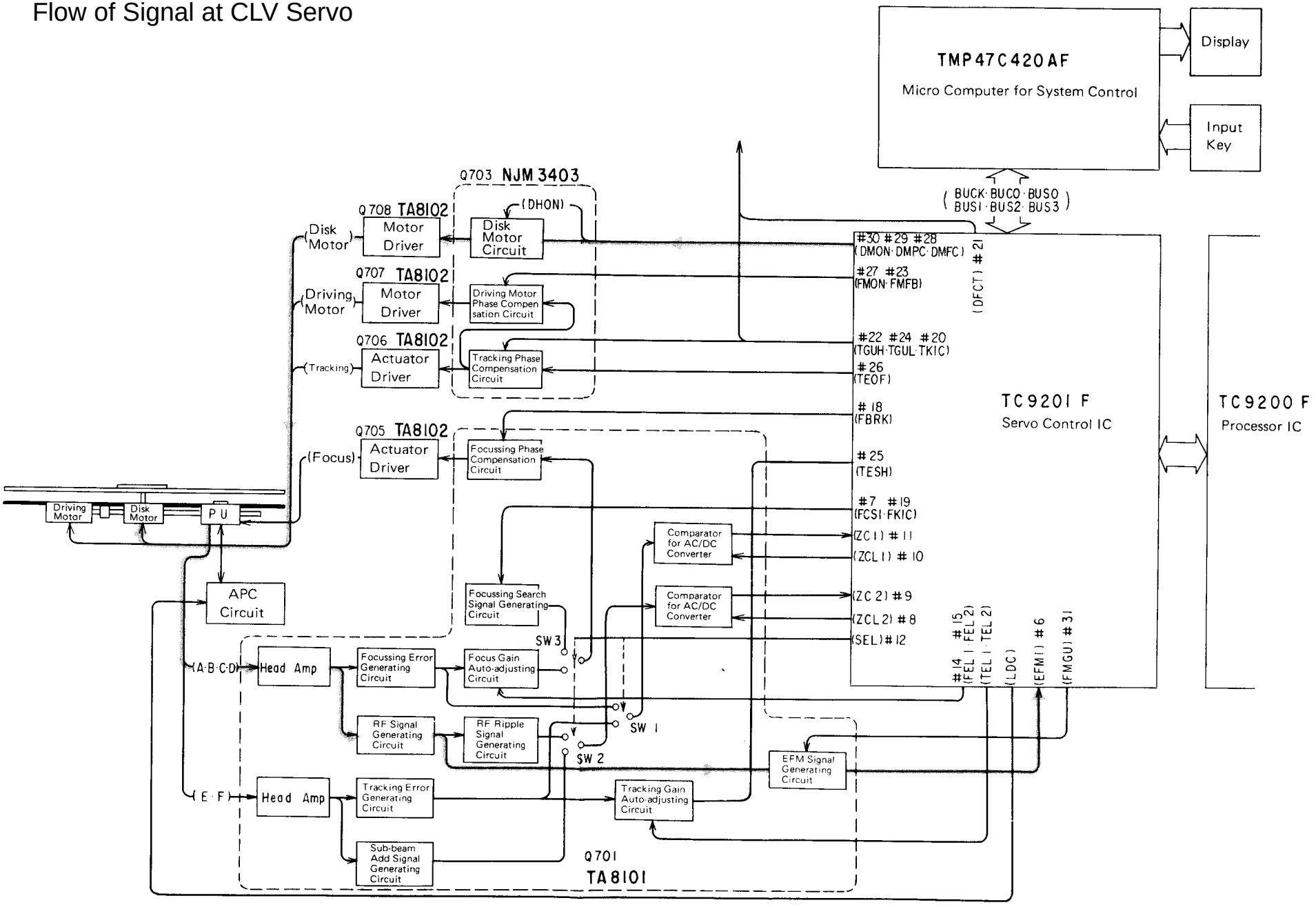

8. CLV SERVO CIRCUIT

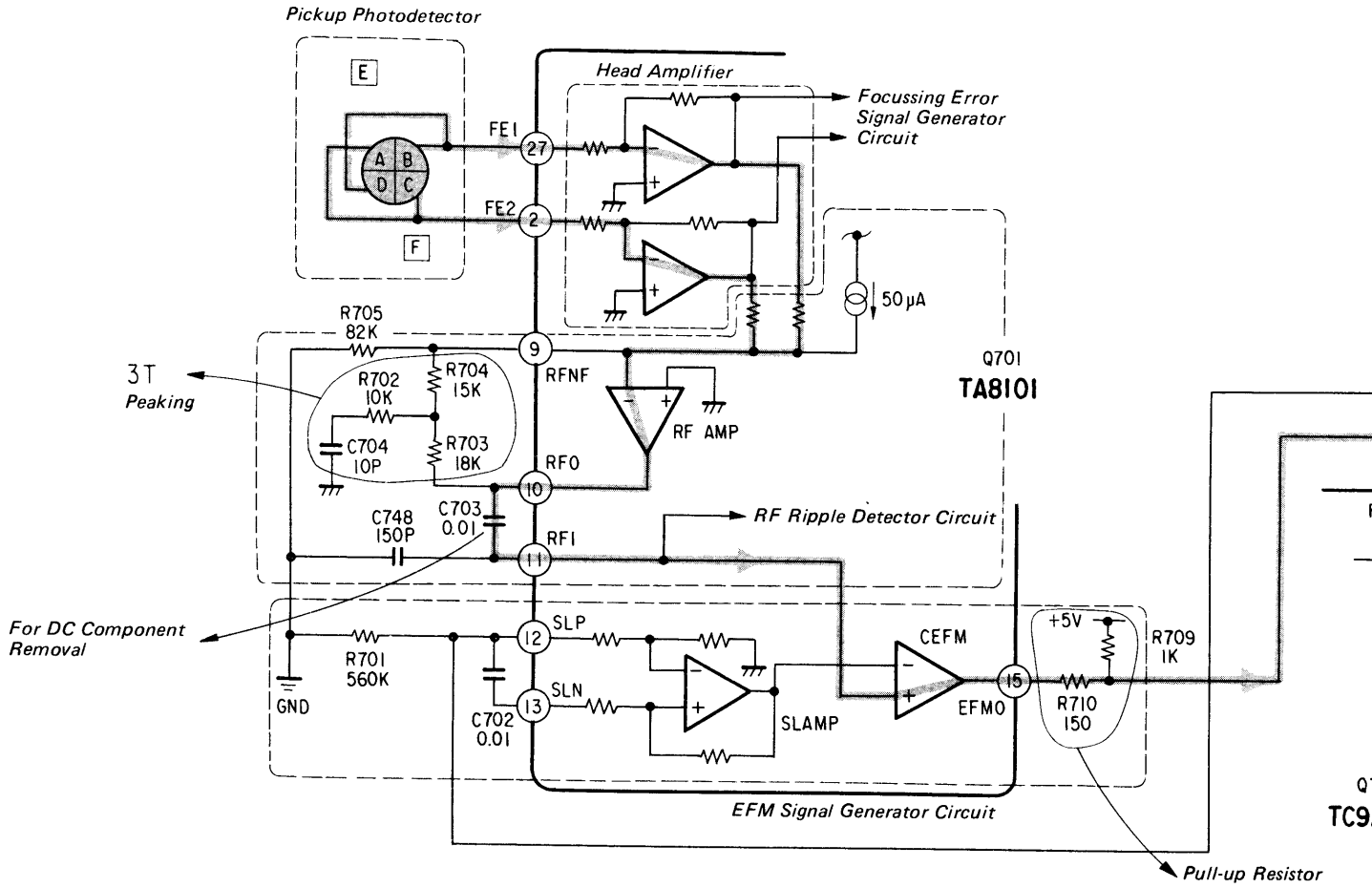

* Since Compact Discs employ the constant linear velocity (1.2 m/s to 1.4 m/s) recording method, they rotate at varying rotational speeds when playing; 500 rpm at the innermost track and 200 rpm at the outermost track. The CLV (Constant Linear Velocity) servo circuit controls the disc motor so that the linear velocity is always kept constant. The signal on the disc is read by the pickup, fed through the head amplifier and RF signal generator to the EFM signal generator, and is converted there into an EFM signal from which a frame synchronizing pattern is detected and the rotational speed of the disc is sensed within Q702 TC9201 and Q301 TC9200.

(1) The current outputs of the pickup detectors enter the head amplifier and are converted there into voltage signals which enter the RF amplifier and are added together (FE1 + FE2). The sum signal appears at Pin 10 (RFO), passes through the peaking circuit to level the frequency-response characteristic, has its DC component removed by C703, and returns to Q701 at Pin 11 (RFI).

(2) The signal (RF Signal) fed to Pin 11 (RFI) enters the EFM signal generator which converts it into a digital signal of 0 or 5 volts by removing its intermediate voltages (see Photograph).

(3) The waveform at RFI Terminal is the RF signal that has its DC component removed by C702 but is oscillating about Vref. This RF signal is fed to the (+) input of the CEFM comparator which slices out its intermediate voltages to produce the EFM signal.

(4) The EFM signal thus produced enters Q702 TC9201 from Pin 6 (EEMI) and is processed there into two signals; DMFC, the disc motor rotational speed control signal and DMPC, disc motor rotational phase control signal.

(5) There are two modes of disc motor speed control: the rough servo mode when tracking is off and the CLV servo mode when tracking is on.
The waveform of the DMPC signal and the position of the DMON and FMGU switches change depending on the modes so that the best controlling performance can be accomplished for both modes.

* In the NORMAL PLAY mode, the DMON and FMGU switches in Q702 are on. The disc motor circuit then acts as an amplifier having an amplification factor of 9 or about 9.8 dB and forms the CLV servo.
In this mode, the DMFC and DMPC signals have three states, as follows:
DMFC: High, Low, Vref
DMPC: High, Low, High-impedance

RF #11 *RFI Ter*

EFM #15 *EFMO Ter*

RFI Terminal

DMFC

DMPC

DMON V_{RE}

FMGU V_{RE}

Operation

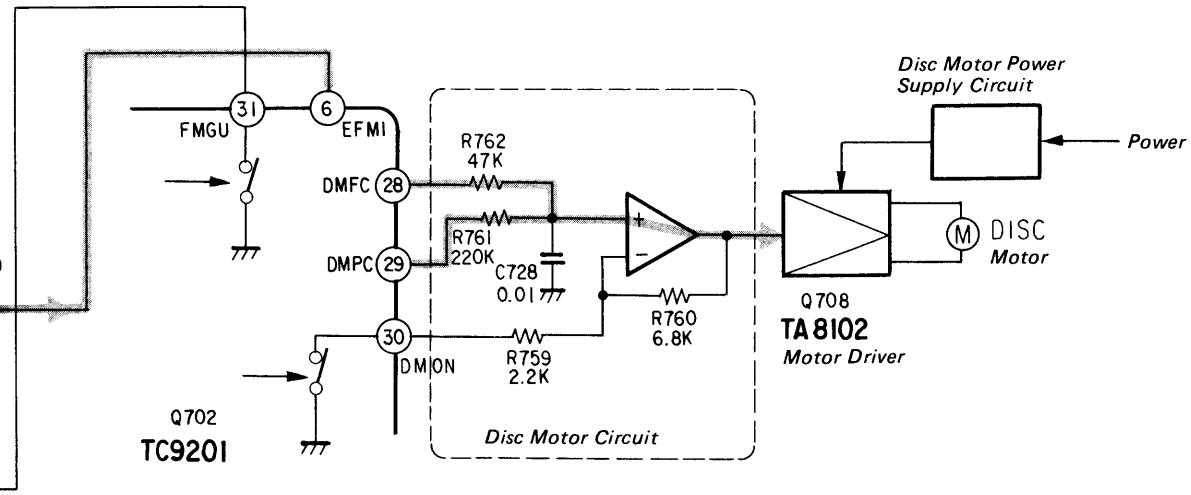

Pull-up Resistor

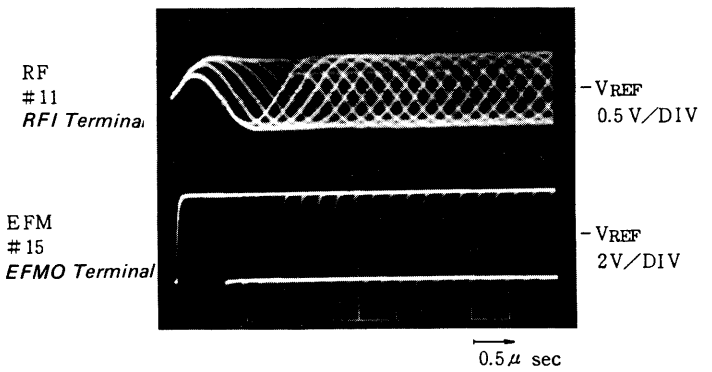

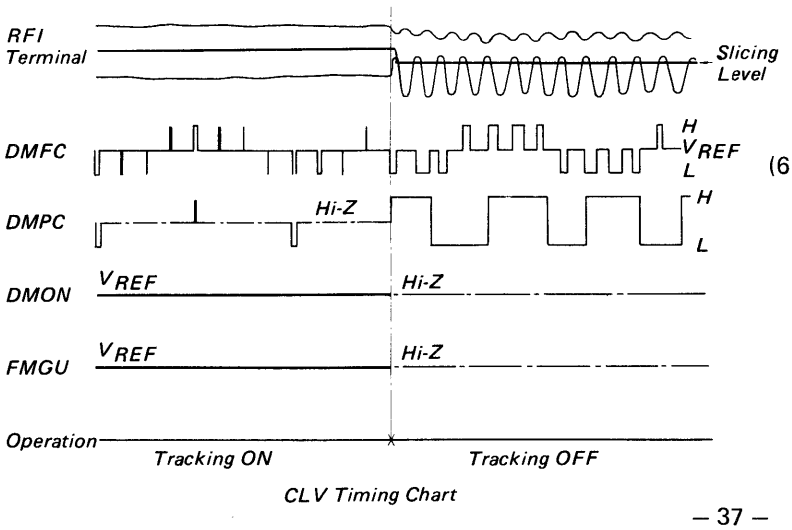

CLV Timing Chart

* When the tracking servo is off during search or automatic tracking control, the rough servo mode is entered and the DMON and DMGU switches are off.
When the tracking servo is off, the time constant of DC Component Removal Capacitor C703 in the RF signal generator circuit shifts the center level of the RF signal at the RFI terminal towards the ground level by about 20 percent. Even in this case, if the output of the SL (Slice Level) amplifier is shifted by the same amount the EFM data can be output and the rough servo goes into action.
In the rough servo mode, control is not so fine as in the CLV servo mode and the DMPC signal has only two states: high and low levels. The motor speed in this mode is controlled coarsely within ±1.0 of the PLL lock range.

(6) Disc Motor Driver Q708 TA8102P uses a 9-volt power supply, differing from Q705 ~ Q707, to provide a wide dynamic range so that the player is unaffected by disturbances that causes the player's rolling motion.

Flow of Signal at Search Operation

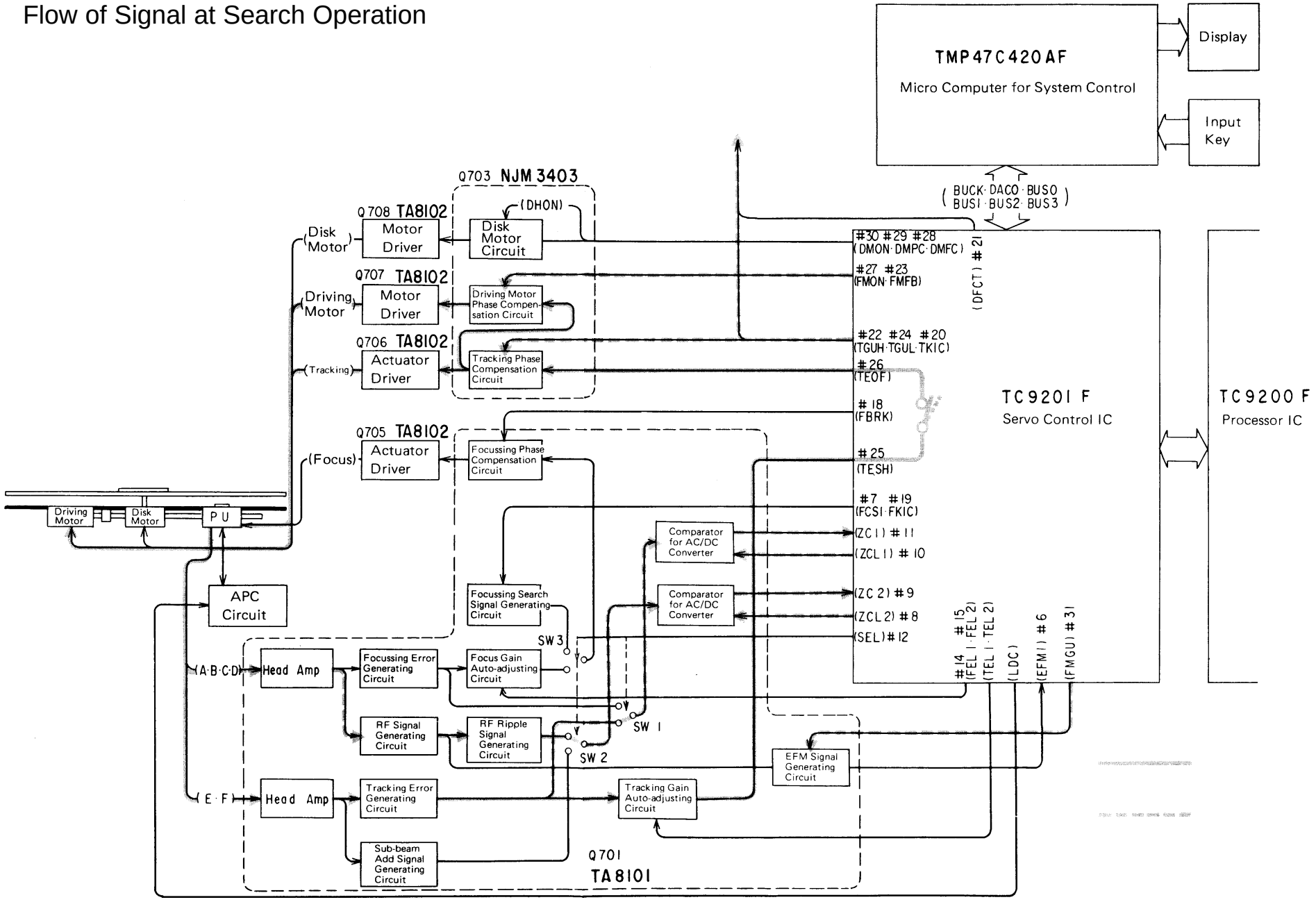

9. SERCH SYSTEM CIRCUIT

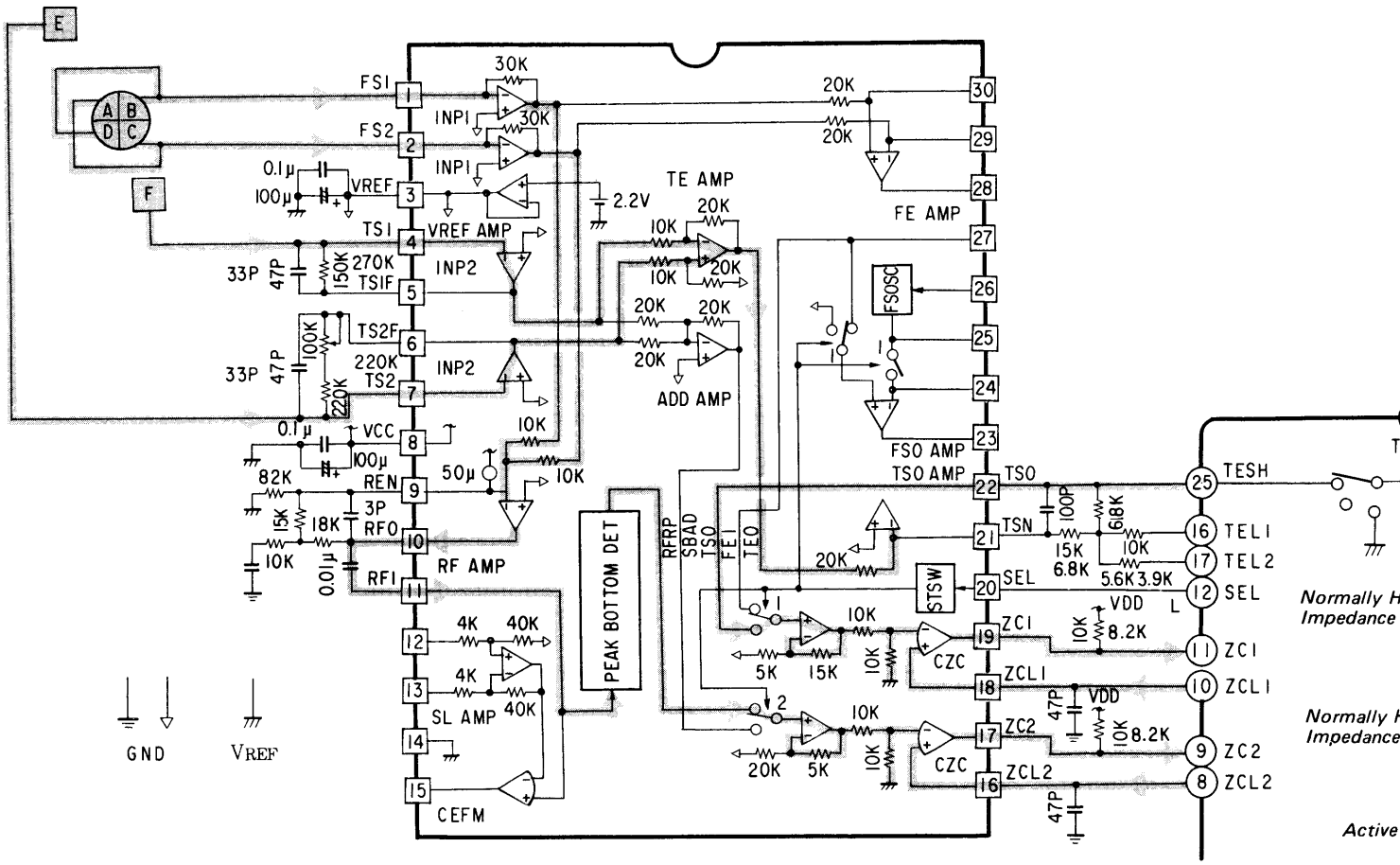

* The search system provides track number searching, FF, BWD, and pause.
Searching is performed by the combination of two actions: tracking actuator kick and feed motor kick, and is controlled by the Q601 which delivers control commands to Q702 TC9201.
Basically the same system is used for both tracking actuator kick and feed motor kick. This system operates mainly on the tracking servo circuit and feed motor circuit.

9-1 Actuator Kick

(1) Actuator kicking is used when the number of tracks to be skipped is one to 32. Figure shows the waveforms at various parts at 3-track and 10-track kicking.
(2) During kicking operations, the SEL terminal is low and Switches 1 and 2 in Q701 TA8101 are switched to TSO and RFRP (RF ripple), respectively.
* RFRP = the ripple component detected from the RF signal.

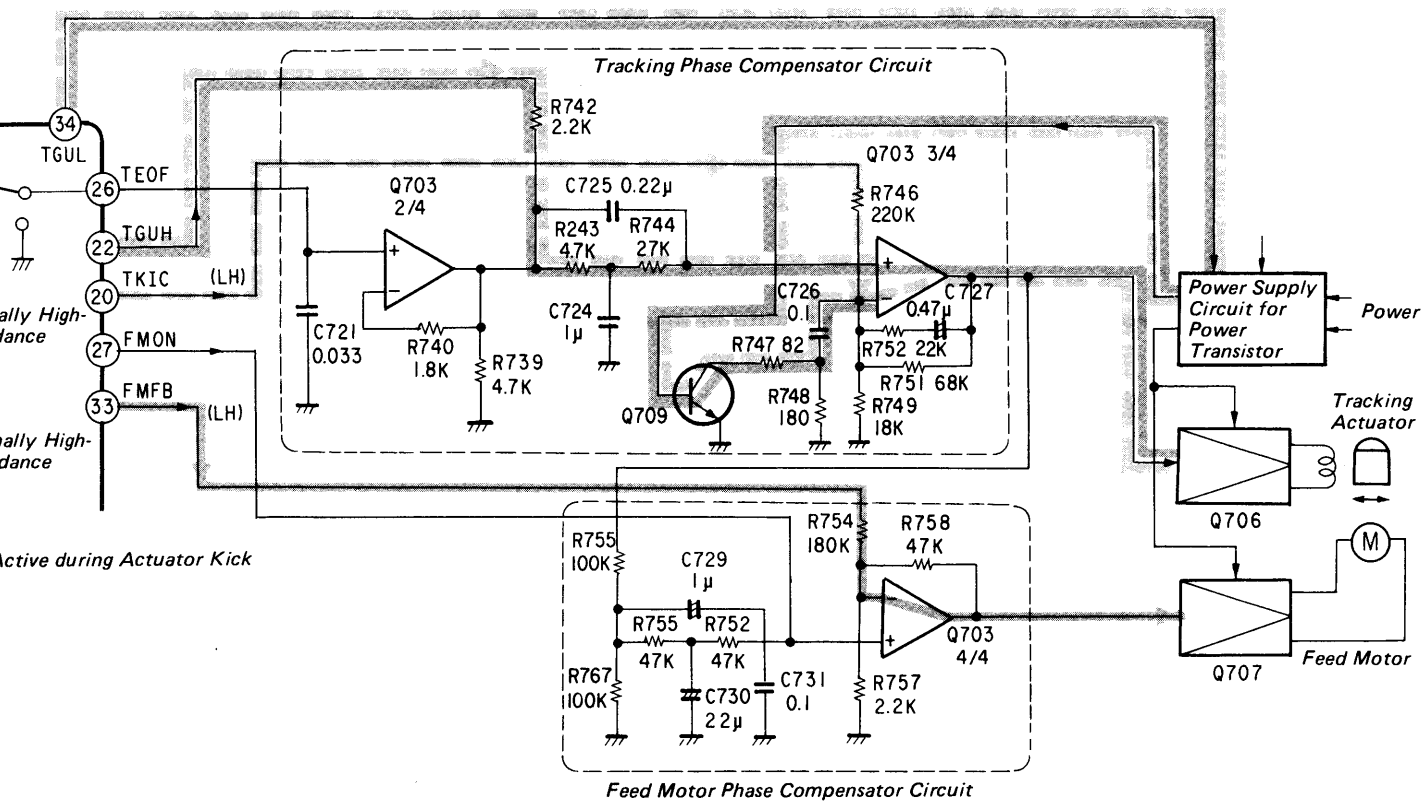

(3) The RFRP signal is sent to TC9201 over ZC2 and ZCL2 lines and used to count the number of tracks. After confirming that the specified track has been reached by kicking, the tracking servo turns on at the moment of the tracking error's zero crossing.

(4) The kick signal appears at Pin 20 (TKIC) of Q702. At this time, Switches 24 (TGUL) and 22 (TGUH) within Q702 turn off to make R742 open-ended so that the gain of the tracking servo increases. At the same time, the power supply circuit is switched to 9 volts to raise the supply voltage to Q705 to Q707.

(5) In the meanwhile, the high-impedance output (2.7V) at Pin 24 (TGUL) enters the base of Q709 to turn it on for 2 to 3 ms so that the gain of the tracking servo rises for the while and the phase compensation constant of Q703 is switched to stabilize the search operation.

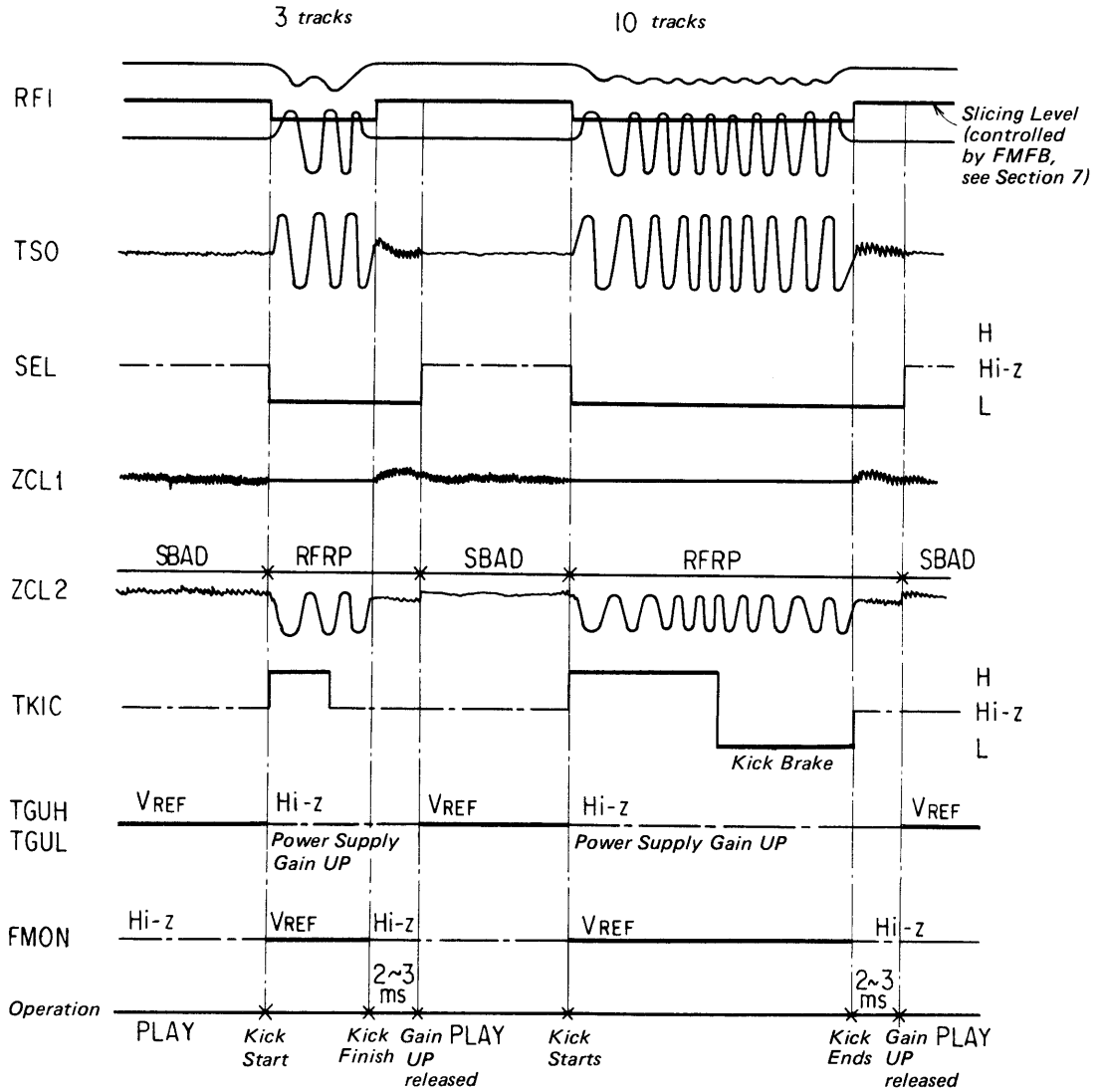

Waveform at Various Part at Tracking Actuator Kicking

Note 1: The brake is not applied for 1- to 4-track kicking.
The brake is applied for 5- to 32-track kicking.
See Timing Chart for Kicking.
(1000 tracks wide = about 1.6 mm)

Note 2: Reason for Brake Application
If the brake is not applied at a skip across a large number of tracks, the proper track would be exceeded. If the brake is applied at a skip across a small number of tracks, the pickup would go backward.

9-2 Feed Motor Kick

* The same action takes place as described in up to Section 3 under Actuator Kick.

(1) Q702 delivers at Pin 33 (FMFB) a feed motor kick signal of high level. At the same time, Switches 24 (TGUL) and 22 (TGUH) in Q702 are switched in the same manner as in the actuator kicking operation to increase the gain of the tracking loop and raise the supply voltage to Q705 to Q707 to 9 volts.

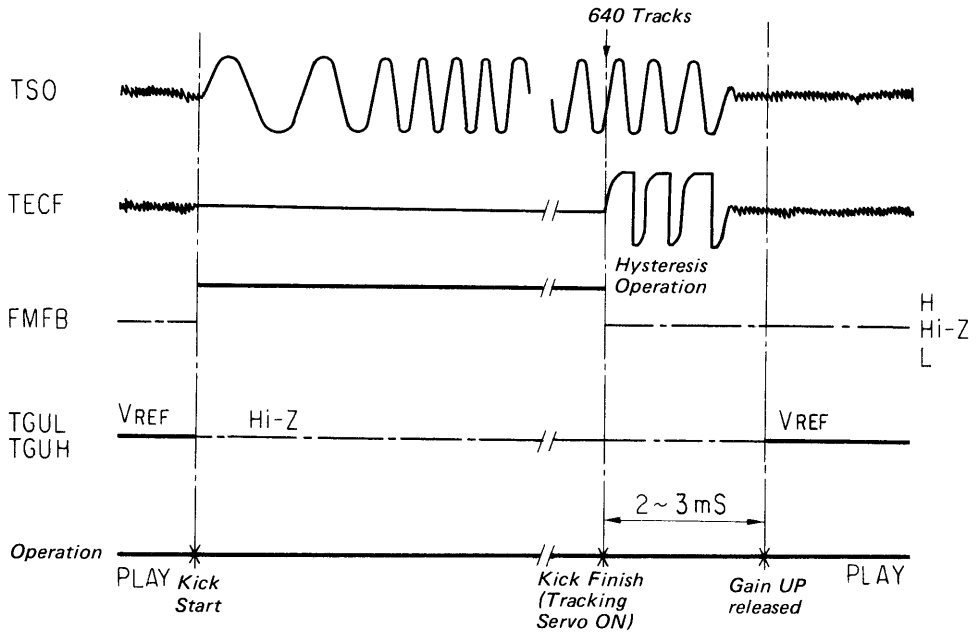

Timing for Feed Motor Kick without Brake Application

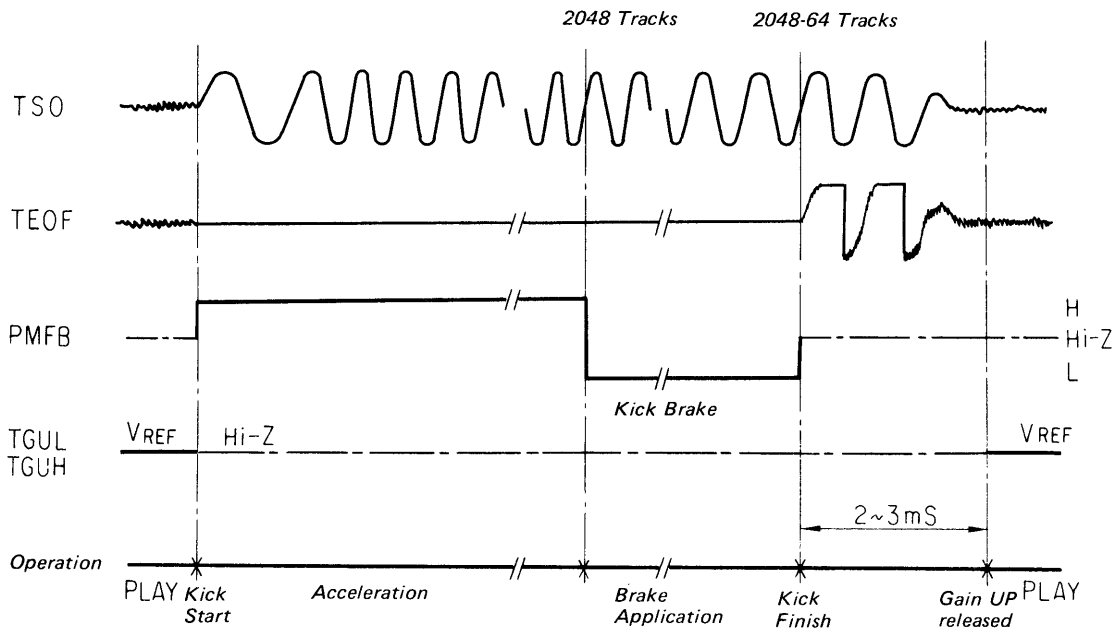

Timing for Feed Motor Kick with Brake Application

Note: The brake is not applied for kicking across 64 to 960 tracks, and is applied for kicking across 1,024 or more tracks as shown by FMFB in the timing chart above.

10. OPERATION OF AUDIO CIRCUIT (EFM SIGNAL)

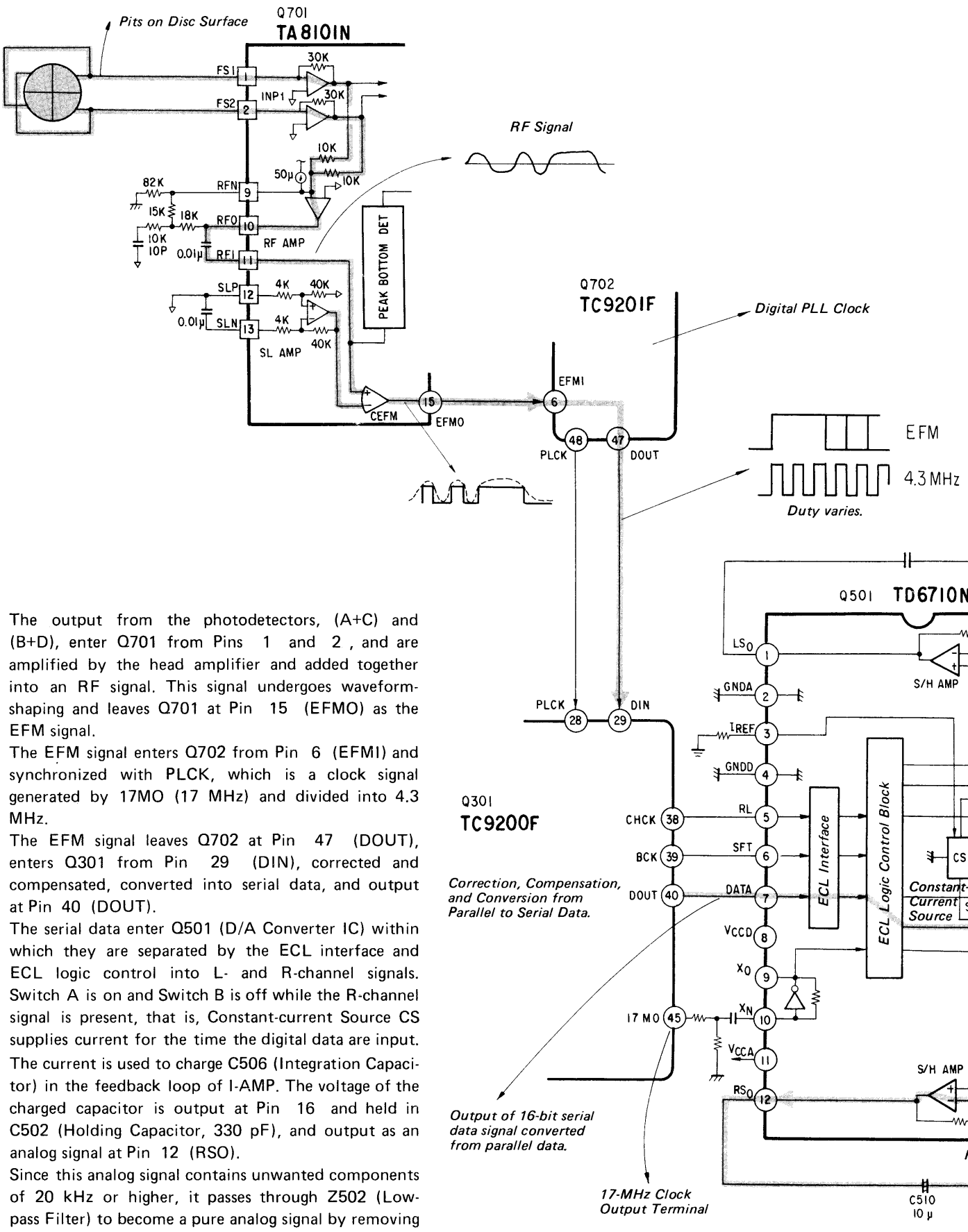

(1) The output from the photodetectors, (A+C) and (B+D), enter Q701 from Pins 1 and 2, and are amplified by the head amplifier and added together into an RF signal. This signal undergoes waveform-shaping and leaves Q701 at Pin 15 (EFMO) as the EFM signal.

(2) The EFM signal enters Q702 from Pin 6 (EFMI) and synchronized with PLCK, which is a clock signal generated by 17MO (17 MHz) and divided into 4.3 MHz.

(3) The EFM signal leaves Q702 at Pin 47 (DOUT), enters Q301 from Pin 29 (DIN), corrected and compensated, converted into serial data, and output at Pin 40 (DOUT).

(4) The serial data enter Q501 (D/A Converter IC) within which they are separated by the ECL interface and ECL logic control into L- and R-channel signals. Switch A is on and Switch B is off while the R-channel signal is present, that is, Constant-current Source CS supplies current for the time the digital data are input. The current is used to charge C506 (Integration Capacitor) in the feedback loop of I-AMP. The voltage of the charged capacitor is output at Pin 16 and held in C502 (Holding Capacitor, 330 pF), and output as an analog signal at Pin 12 (RSO).

(5) Since this analog signal contains unwanted components of 20 kHz or higher, it passes through Z502 (Low-pass Filter) to become a pure analog signal by removing the unwanted high-frequency components.

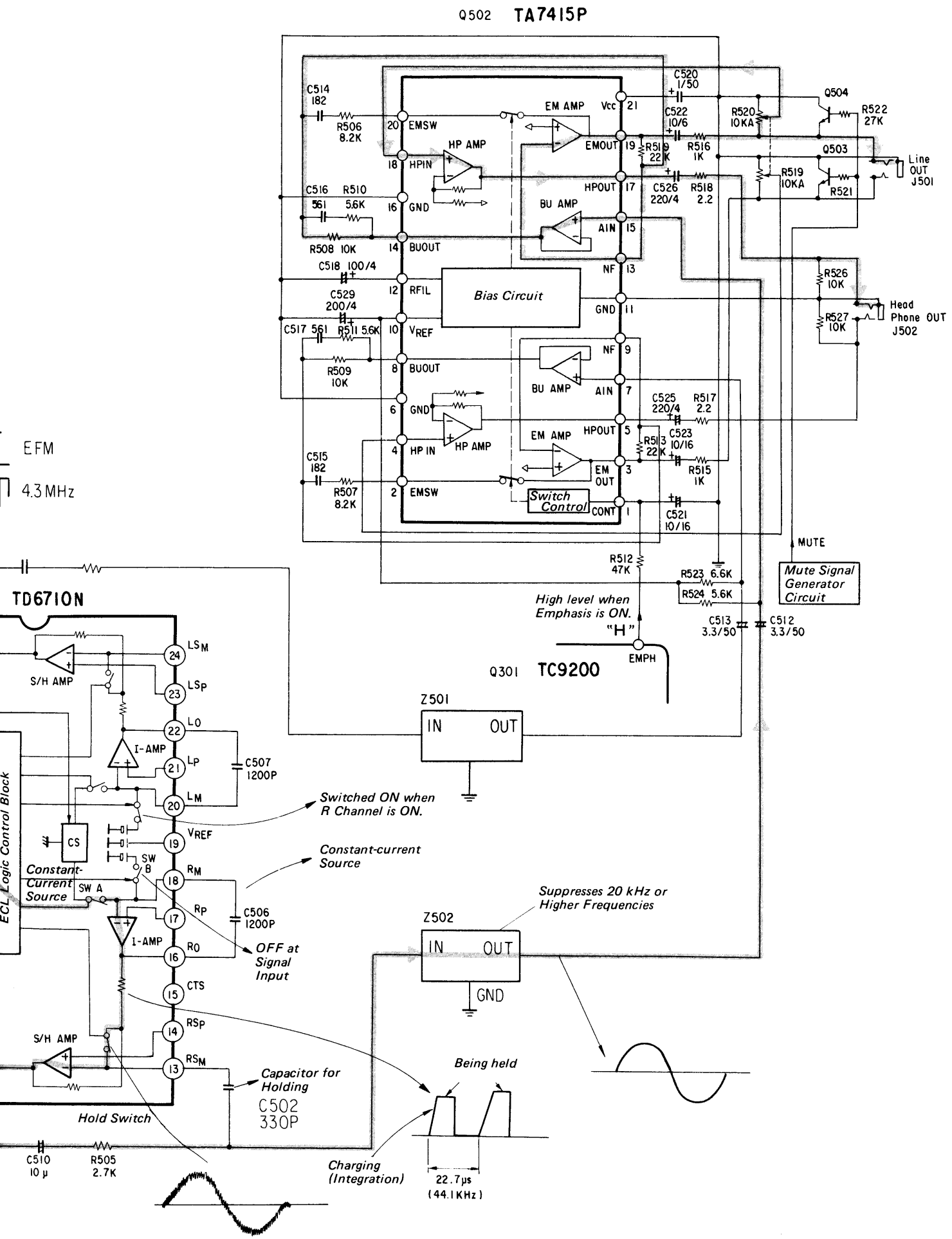
Q502 TA7415P
C514 182
R506 8.2K
EMSW
HP AMP
HPIN
C516 561
R510 5.6K
GND
BUOUT
R508 10K
C518 100/4
C529 200/4
RFIL
VREF
C517 561
R511 5.6K
R509 10K
BUOUT
GND
HP IN
HP AMP
C515 182
R507 8.2K
EMSW
EM AMP
Vcc
EMOUT
HPOUT
BU AMP
AIN
NF
Bias Circuit
GND
NF
BU AMP
AIN
EM AMP
HPOUT
EM OUT
Switch Control
CONT
C520 1/50
C522 10/6
R520 10KA
R519 22K
R516 1K
Q504
R522 27K
Q503
R519 10KA
R521
Line OUT J501
C526 220/4
R518 2.2
R526 10K
R527 10K
Head Phone OUT J502
C525 220/4
R517 2.2
R513 22K
C523 10/16
R515 1K
C521 10/16
MUTE
Mute Signal Generator Circuit
R512 47K
R523 6.6K
R524 5.6K
C513 3.3/50
C512 3.3/50
High level when Emphasis is ON.
"H"
EMPH
Q301 TC9200
EFM
4.3MHz
TD6710N
S/H AMP
LSM
LSP
LO
I-AMP
LP
C507 1200P
LM
Switched ON when R Channel is ON.
VREF
CS
SW B
Constant-current Source
Constant-Current Source
SW A
RM
RP
C506 1200P
I-AMP
RO
OFF at Signal Input
CTS
RSP
S/H AMP
RSM
Capacitor for Holding
C502 330P
Hold Switch
C510 10μ
R505 2.7K
ECL Logic Control Block
Z501
IN
OUT
Z502
IN
OUT
GND
Suppresses 20 kHz or Higher Frequencies
Being held
Charging (Integration)
22.7μs (44.1KHz)

XR-V12/V15(XR-30, XR-35) CIRCUIT OPERATION

1. FORWARD, REVERSE, AND STOP OPERATIONS OF TRAY MOTOR

(1) Q301 (TA7354P) is the IC for providing control functions of the motor that is connected to Pins 7 and 8; forward or reverse revolution, short-circuit (braking), or disconnection, depending on the input logic values at Pins 2 and 3. When the console button is pressed, Microprocessor Q304 receives Tray Open/Close Command and Pin 6 goes high if the tray is open or Pin 5 goes high if closed to operate the tray accordingly.

(2) When the tray is closed, Open/Close Limit Switch in the mechanism is in Tray Close Position as shown in the circuit diagram. When opening this tray, a press on S205 (OPEN/CLOSE Switch) causes Pin 5 (CLSM) of Q304 to go to the low and Pin 6 to go to the high level.

(3) The high level signal at Pin 6 of Q304 enters Q301 from Pin 2 and goes through the inverter in Block A. The inverted low level signal enters the AND circuit in the same block. The high level signal also enters the AND circuit in Block B along another line branching before the inverter.

(4) At this time, Pin 5 of Q304 is in the low level and this signal also enters Q301 at Pin 3 and goes through the inverter in Block B. The inverted high level signal enters the AND circuit in the same block. At the same time, the low level signal enters the AND circuit in Block A along another line branching before the inverter.

(5) Under these conditions, the outputs of Blocks A and B are high and low, respectively. Current flows from Pin 8 of Q301 through R305 (3.3 Ohms) to the ground and the motor runs to open the tray.
When closing the tray, the inverse operations take place, that is, Pin 5 of Q304 is high and Pin 6 is low so that the motor runs in the reverse direction.

(6) When the tray is closed and the motor rests, Pins 5 and 6 of Q304 are both high and the brake is applied on the motor. When the tray is open and the motor rests, Pins 5 and 6 of Q304 are both low, the motor is disconnected.

(7) When the tray motor is blocked externally, for example, by an inadvertently inserted finger during its operation (OPEN or CLOSE), overcurrent flows into the motor and the potential at the base of Q302 (2SC2458) goes high due to Detection Resistor R305 (3.3 Ohms) so that this transistor turns on. Consequently, the potential at OCLT of Q304 goes low. That is, if the tray opening motion is hindered, the motor is run under control of the microprocessor in the tray-closing direction, in the same manner as when S205 (OPEN/CLOSE Switch) is pressed again. If the tray closing motion is blocked, the motor runs in the tray-opening direction.

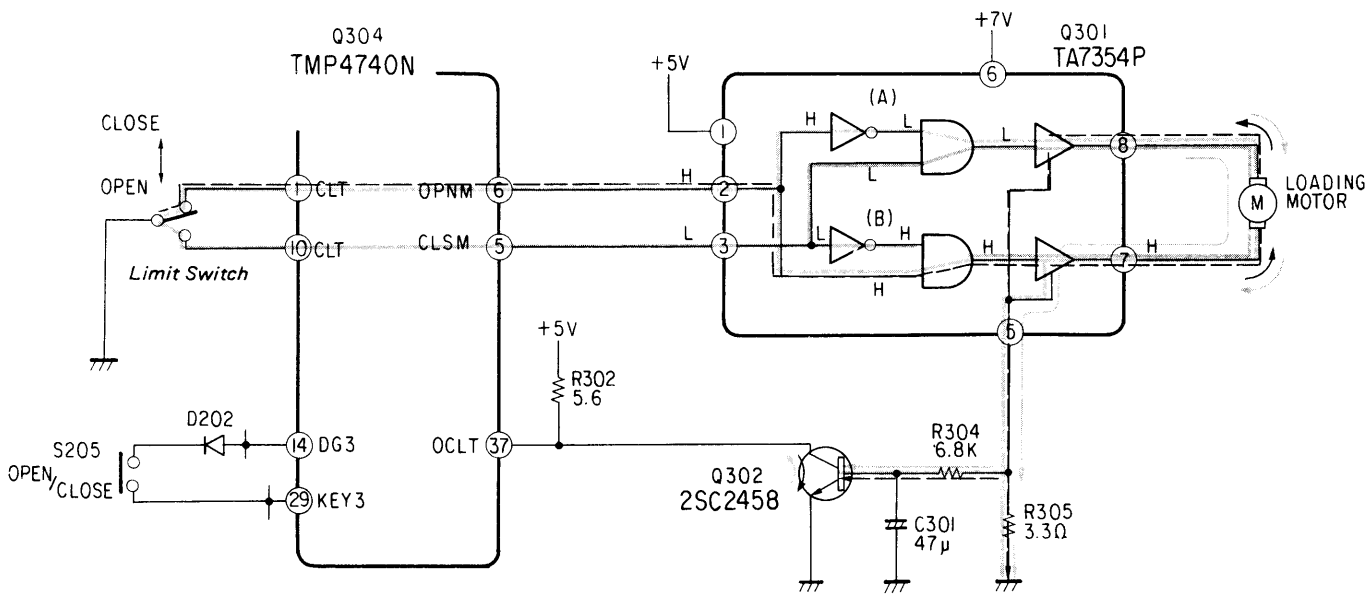

2. OPERATION OF DISC MOTOR BRAKE CIRCUIT

Since they employ a tray for disc loading, the disc rotation must be stopped when the tray is open. For this purpose, a purpose, a disc motor brake circuit is provided on the hardware and a disc motor brake time on the software.

Operation

(1) In the circuit diagram, the positions of the switches in Q313 correspond to the NORMAL mode (except braking operation). The signal flow here is as follows: DMPC and DMFC are generated in Q307 (TC9201F), integrated by C332, buffered by Q310 (NJM3403¼), and fed to Q317 (BTL driver, TA8102P) which drives the disc motor. At the inversion input of Q310, current would be entering through R371 from Q312½ (NJM2904¼). However, because Switch Z in TC4053 is open, C337 is discharged and there is no incoming current from R371.

(2) When braking actions start, the microprocessor first delivers LDC OFF Command to Q307 (TC9201) and all the servos are off. Therefore, DMPC and DMFC of Q307 becomes high-impedance and Vref, respectively. The microprocessor delivers at Pin 39 (BRK) a brake pulse string having a waveform of 2 ms high and 8 ms low levels for one second.

(3) During the first 2 ms, the three switches in the brake circuit (TC4053) are all switched to Position 1. At this moment, the input to Motor Driver Q317 (TA8102P) is muted to Vref and the motor enters the "unpowered" condition. Back electromotive force, which is proportional to the motor speed, appears across R391. This back force is amplified in the differential amplifier within Q312½ by a factor of 10.

(4) The amplified voltage charges C337 via Switch Z. During the next 8 ms, BRF is low and the three switches return to Position 0. The voltage due to the charge on C337 is amplified in Q312½ by a factor of 2 and the resulting current is input to Q310¼ through R371. Since the switch between Driver Q317 and Q310 is on, the back electromotive force sampled during the high level of BRK is fed back to the motor as a plugging voltage after it has been amplified by a total factor of about 100. The cycle consisting of this back electromotive force sampling and countercurrent braking repeats itself for one second.

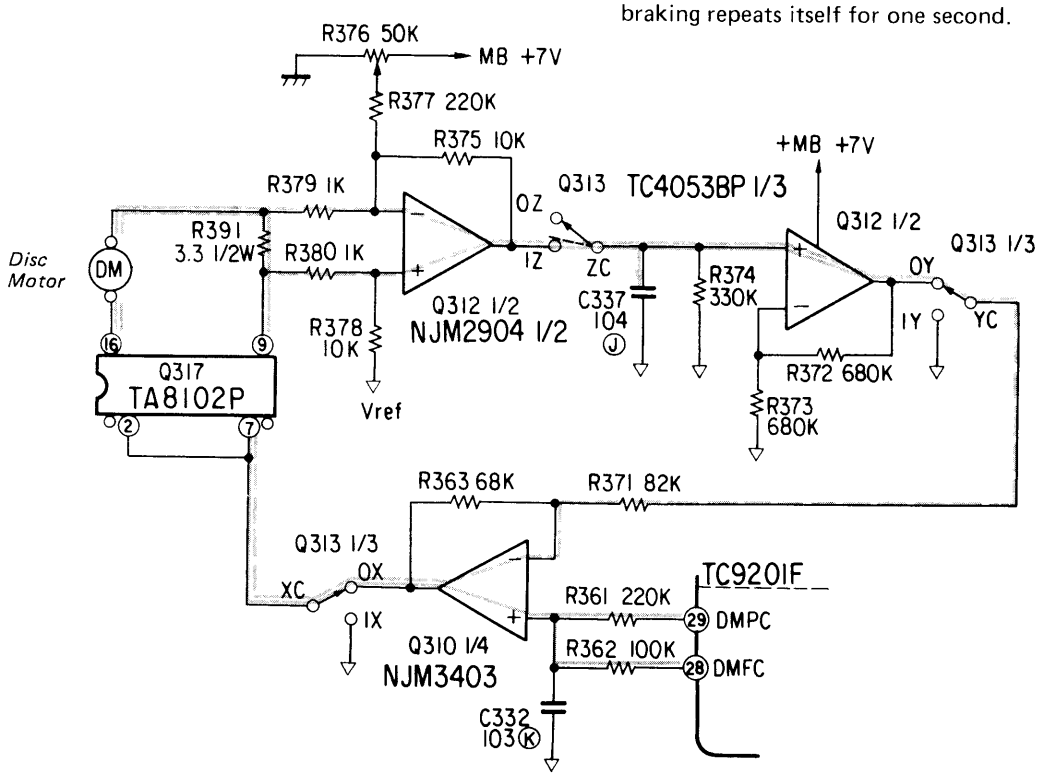

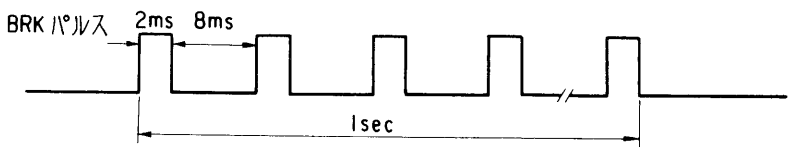

V. FUNCTION AND OPERATION OF MICROCOMPUTER

XR-P9, XR-J9

TA8101

Pin Number	Symbol	I/O	Function	Remarks
1	FS1	I	Main Beam I/V Converters 1 and 2 Input Terminals	Connected to P-i-n Diodes B and D
2	FS2			Connected to P-i-n Diodes A and C
3	V_{REF}	O	Reference Voltage Output Terminal (+2.2V)	
4	TS1	I	Sub-beam I/V Conver 1 Input Terminal	Connected to P-i-n Diode F
5	TS1F	O	Sub-beam I/V Converters 1 and 2 Output Terminals	Connected to TS1 through a feedback capacitor and resistor
6	TS2F			Connected to TS2 through a feedback capacitor and resistor
7	TS2	I	Sub-beam I/V Converter 2 Input Terminal	Connected to P-i-n Diode E
8	V_{CC}	–	Power Supply Terminal (+5V)	
9	RFN	I	RF Amplifier Opposite Phase Input Terminal	
10	RFO	O	RF Amplifier Output Terminal	Connected to RFN through a feedback resistor
11	RFI	I	RF Signal Input Terminal	Connected to RFO through a capacitor for DC component removal
12	SLP	I	Slicing Level Control Amplifier Positive Phase Input Terminal	
13	SNL	I	Slicing Level Control Amplifier Opposite Phase Input Terminal	
14	GND	–	Ground Terminal	
15	EFMO	O	EFM Signal Data Slicer Output Terminal (Open collector output)	

Pin Number	Symbol	I/O	Function	Remarks
16	ZCL2	I	Status Comparator 2 Positive Phase Input Terminal	
17	ZC2	O	Status Comparator 2 Output Terminal (Open collector output)	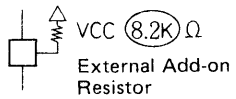 External Add-on Resistor
18	ZCL1	I	Status Comparator 1 Positive Phase Input Terminal	
19	ZC1	O	Status Comparator 1 Output Terminal (Open collector output)	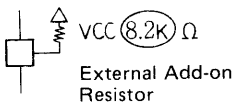 External Add-on Resistor
20	SEL	I	Analog Switch Control Signal Input Terminal	
21	TSN	I	Tracking Servo Amplifier Opposite Phase Input Terminal	
22	TSO	O	Tracking Servo Amplifier Output Terminal	Connected to TSN through a feedback capacitor and resistor
23	FSO	O	Focussing Servo Amplifier Output Terminal	Connected to FSN through a feedback capacitor and resistor
24	FSN	I	Focussing Servo Amplifier Opposite Phase Input Terminal	
25	COSC	O	Focus Search Signal Generation Capacitor Connection Terminal	
26	OSCI	I	Built-in Current Source Control Terminal	
27	FEI	I	Focussing Error Signal Input Terminal	
28	FEO	O	Focussing Error Amplifier Output Terminal	Connected to FEN through a feedback capacitor and resistor
29	FEN	I	Focussing Error Amplifier Opposite Phase Input Terminal	
30	FEP	I	Focossing Error Amplifier Positive Phase Input Terminal	

TC9201

Pin Number	Symbol	I/O	Function	STOP Mode	PLAY Mode
1	4MCK	O	4 MHz Clock Output Terminal	4.2MHz	
2	RST	I	Reset Input Terminal	H	
3	LDC	O	Laser Diode Driver Circuit Control Signal Output Terminal	L	H
4	SLP	O	Not-inverted EFM Signal Output Terminal (not used)	–	
5	SLN	O	Inverted EFM Signal Output Terminal (not used)	–	
6	EFMI	I	EFM Signal Input Terminal	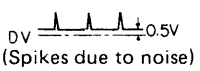 DV 0.5V (Spikes due to noise)	DV 0.5V
7	FCSI	O	Focus Search Signal Output Terminal	Hi-Z	
8	ZCL2	O	Built-in D/A Converter Output Terminal 2	Waveform containing noise of about 0.4V	Waveform containing noise of about 1.1V
9	ZC2	I	Input Terminal 2 for External Comparator Output Signal	About 260 kHz	Varies with status
10	ZCL1	O	Built-in D/A Converter Output Terminal 1	Waveform containing noise of about 1.1V	
11	ZC1	I	Input Terminal 1 for External Comparator Output Signal	About 260 kHz	Varies with status
12	SEL	O	Pickup Servo Mode Instruction Signal Output Terminal	H	Hi-Z
13	V_{REF}	I	Built-in D/A Converter Power Supply Terminal (+2.1V)	2.1V (V_{REF})	
14	FEL1	O	Focussing Gain Control Analog Switch Output Terminals	= 2.1V (V_{REF} or Hi-Z)	
15	FEL2				
16	TEL1	O	Tracking Gain Control Analog Switch Output Terminals	= 2.1V (V_{REF} or Hi-Z)	
17	TEL2				
18	FBRK	O	Focussing Actuator Braking Signal Output Terminal	Hi-Z (= 2.1V)	
19	FKIC	O	Focussing Actuator Driving Signal Output Terminal	Hi-Z (= 2.1V)	

Pin Number	Symbol	I/O	Function	STOP Mode	Mode
20	TKIC	O	Tracking Actuator Kick Signal Output Terminal	Hi-Z (= 2.1V)	
21	DFCT	O	Defect Detection Terminal	= 4.4V	
22	TGUH	O	Analog Switch Output Terminal for Tracking Phase Compensation Constant Switching	V_{REF} (2.1V)	
23	V_{DD}	I	Power Supply Terminal	+5V	
24	TGUL	O	Analog Switch Output Terminal for Tracking Phase Compensation Constant Switching	V_{REF}	
25	TESH	I	Tracking Error Signal Input Terminal	V_{REF}	TE (Tracking Error Signal)
26	TEOF	O	Tracking Error Signal Output Terminal	V_{REF}	TE
27	FMON	O	Analog Switch Output Terminal for Feed Servo Operation ON/OFF Switching	V_{REF}	Hi-Z (= 2.1V)
28	DMFC	O	Automatic Frequency Control Output Terminal for Disc Motor CLV Servo	V_{REF}	
29	DMPC	O	Automatic Power Control Output Terminal for Disc Motor CLV Servo	Hi-Z (= 2.1V)	
30	DMON	O	Analog Switch Output Terminal for Disc Motor Driver Circuit Gain Switching	V_{REF}	Hi-Z (= 2.1V)
31	FMGU	O	Analog Switch Output Terminal for Feed Motor Servo Gain Switching	V_{REF}	
32	V_{REF}	I	Reference Voltage Input Terminal	V_{REF}	
33	FMFB	O	Forced Feed Signal Output Terminal for Feed Motor	Hi-Z (= 2.1V)	
34	$V_{DD}2$	I	Servo Circuit's High Level Reference Voltage Input Terminal	= 4.5V	
35	CK8M	I	8 MHz Clock Input Terminal (not used)	GND	
36	WDCK	I	Connected to TC9200 Pin 35	88.2 kHz	
37	COFS	I	Connected to TC9200 Pin 34	7.35 kHz	
38	SPDA	I	Connected to TC9200 Pin 33	Pulses each having a period of 7.35 kHz equivalent and varying with status	
39	SCDA	O	Control Data Serial Output Terminal Connected to TC9200 Pin 32	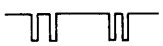 (A period of 7.35 kHz equivalent)	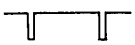 (7.35 kHz)

Pin Number	Symbol	I/O	Function	STOP Mode	PLAY Mode
40	TES3	I	Terminal for Testing (not used)	L	
41	SGS	I	Phase Locked Loop Circuit Selection Terminal	L	
42	PD	O	Phase Comparison Signal Output Terminal for Phase Locked Loop not used)	–	
43	X-O	O	Quartz-crystal Oscillator Connection Terminal (not used)	–	
44	X-I	I	17 MHz Clock Input Terminal	17 MHz	
45 46	TES2 TES1	I	Terminals for Testing (not used)	H	
47	DOUT	O	EFM Signal Output Terminal Connected to TC9200 Pin 29	L	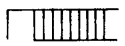 (EFM Signal)
48	PLCK	O	Pit Clock Output Terminal Connected to TC9200 Pin 28	4.32 MHz	
49	PFCK	I	Frame Period Signal Input Terminal Connected to TC9200 Pin 27	7.35 kHz	
50	SOS1	I	Sub-code Sync Input Terminal Connected to TC9200 Pin 26	 (Random Pulse)	 750 Hz
51	SUBQ	I	Input Terminal for Q Data in Sub-code Signal Connected to TC9200 Pin 25	(Low level only for a moment after power-on)	 (Serial Data)
52	SBOK	I	Input Terminal for Result of CRC Check on Q Data in Sub-code Signal	L	H
53	V_{DD}	I	Power Supply Terminal +5V	+5V	
54	V_{SS}	I	Ground Terminal 0V	0V	
55 〜 58	BUS0 BUS3	I/O	Bus Line Terminals for Command and Data I/O	Vary with status	
59	DA/CO		Command and Data Processing Control I/O Terminal		
60	BUCK	I	Input Terminal of Clock for Command and Data I/O		

TD6710N

Pin Number	Designation	Function and Operation	Remarks
1	LSO	L-channel Sample Hold Output Terminal	
2	GNDA	Ground Terminal for Analog Signals	
3	IREF	Reference Current Input Terminal The input for determining the current of the constant-current source. A 68K ohm resitor should be put between the ground and this terminal.	
4	GNDD	Ground Terminal for Digital Signals	
5	RL	Input Data L- and R-channel Selection Signal Input Terminal This signal is used as the control signal in the LSI. And, it should be input in syncronism with the low-going edges of the SFT Signal below. f_{RL} = 44.1 kHz, Duty Cycle = 50%	
6	SFT	Shift Clock Input Terminal The clock for reading 16-bit PCM Digital Audio Data bit-serially from the most significant bit into the LSI. f_{SFT} = 1.4112 kHz, Duty Cycle = 50%	
7	DATA	PCM Digital Audio Data Input Terminal The data are input bit-serially (in 16-bit units) from the most significant bit in synchronism with the low-going edges of SFT Signal. RL Signal: Low level = Left Channel, High level = Right channel	
8	VCCD	Voltage Supply Terminal for Digital Signals (+5V)	
9 10	XO XN	Input Terminal for Oscillator When a capacitor is connected to the crystal oscillator terminal, a deformed Colpitts oscillator circuit forms.	A ceraloc may be used. 16.9 MHz may be supplied to XN from the outside. (C-MOS level) XO should be connected to VCCD.
11	VCCA	Voltage Supply Terminal for Analog Signal (+5V)	
12	RSO	Right Channel Sample Hold Output Terminal	
13	RSM	Right Channel Sample Holding Operational Amplifier Negative Input Terminal A holding capacitor should be put between Terminals RSO and RSM.	
14	RSP	Right Channel Sample Holding Operation Amplifier Positive Input Terminal	
15	CST	Internal Constant-current Source Terminal A decoupling capacitor should be put between the ground and this terminal.	
16	RO	Right Channel Integrator Output Terminal	

Pin Number	Designation	Function and Operation	Remarks
17	RP	Operational Amplifier Positive Input Terminal for Right Channel Integrator	
18	RM	Operational Amplifier Negative Input Terminal for Right Channel Integrator An integrating capacitor should be put between Terminals RO and RM.	
19	VREF	Reference Voltage Supply Terminal for Integrator The voltage supply is contained in the LSI and connected to Positive Inputs Lp and Rp of Operational Amplifiers for L- and R-channel Integrators.	
20	LM	Operational Amplifier Negative Input Terminal for Left Channel Integrator An integrating capacitor should be put between Terminals LO and LM.	
21	LP	Operational Amplifier Positive Input Terminal for Left Channel Integrator	
22	LO	Left Channel Integrator Output Terminal	
23	LSP	Left Channel Sample Holding Operational Amplifier Positive Input Terminal	
24	LSM	Left Channel Sample Holding Operational Amplifier Negative Input Terminal A holding capacitor should be put between Terminals LSO and LSM.	

TC9200

Pin Number	Symbol	I/O	Function	STOP Mode	PLAY Mode
56 ~ 59, 1 ~ 6, 9	AD0 ~ AD3, AD4 ~ AD9, AD10	O	Address Signal Output Terminals for External RAM (8-bit x 2K)	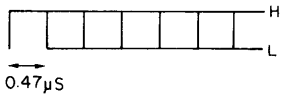	
7	RW	O	READ/WRITE Signal Output Terminal for External RAM	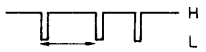 (About 2.5μs or longer)	
8	CE	O	Chip Enable Signal Output Terminal for External RAM	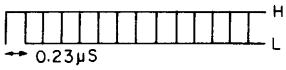	
10 ~ 17	I/O-7 ~ I/O-1	I/O	Data Bus Lines for External RAM	Take H-, L-, and Hi-Z-states at a period of about 2 MHz equivalent	
18 ~ 19	TES5 ~ TES4	I	Terminals for Testing (no connection)	H	
20	EXCK	I	Not used (connected to +5V)	H	
21	SUBD	I	Not used (Output terminal of Sub-codes P to W)	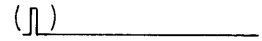 (Random Pulse)	
22	V_{SS}	I	Ground Terminal	0V	
23	V_{DD}	I	Power Supply Terminal	+5V	
24	SBOK	O	Output Terminal for Result of CRC Check on Q Data in Sub-code Signal GOOD → H NG → L	L	H
25	SUBQ	O	Output Terminal for Q Data in Sub-code Signal	(Low level only for a moment after power-on)	(Serial Data)
26	S0S1	O	Sub-code Sync Output Terminal	(Random Pulse)	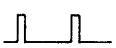 750 Hz
27	PFCK	O	Reproduction System's Frame Period Signal Output Terminal	7.35 kHz (Shows fluctuation)	7.35K (locked)
28	PLCK	I	Clock Input Terminal for Data Read-in	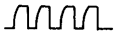 4.32 MHz	

Pin Number	Symbol	I/O	Function	STOP Mode	PLAY Mode
29	EFMI	I	EFM Signal Input Terminal	L	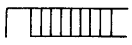 (EFM Signal)
30 31	NC	–	No connection	–	–
32	SCDA	I	Control Data Serial Input Terminal	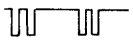 (a period of 7.35 kHz equivalent)	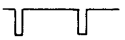 7.35K (locked)
33	SPDA	O	Processor Status Signal Output Terminal	Pulses each having a period of 3.75 kHz equivalent and varying with status	
34	COFS	O	Correction System Frame Sync Signal Output Terminal	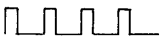 7.35 kHz	
35	WDCK	O	Word Clock Output Terminal	88.2 kHz	
36	EMPH	O	Emphasis ON/OFF Command Signal Output Terminal	H or L	
37	HOF	O	Output Data Correction Flag Output Terminal (not used)	H	L
38	CHCK	O	Channel Clock Output Terminal (RLCK)	44.1 kHz	
39	BCK	O	Bit Clock Output Terminal	1.41 MHz	
40	DOUT	O	Data Output Terminal	L	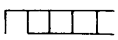 0.7 μs
41	SYCK	O	Symbol Clock Output Terminal (not used)	176.4 kHz	
42	APTR	O	Output Terminal for Signal to Right Channel Data Aperture (not used)	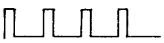 44.1 kHz	
43	APTL	O	Output Terminal for Signal to Left Channel Data Aperture (not used)	44.1 kHz	
44	CK8M	O	8 MHz Clock Output Terminal (not used)	8 MHz	

Pin Number	Symbol	I/O	Function	STOP Mode PLAY Mode
45	17MO	O	17 MHz Clock Output Terminal	17 MHz
46	NC	–	No connection	–
47	X-O	O	Quartz Crystal Oscillator Connection Terminals	5V 0V 17MHz
48	X-I	I		
49	CKSE	I	Clock Selection Terminal (not used)	H
50	TES1	I	Terminals for Testing (not used)	H
51	TES2			
52	TES3			
53	V_{DD}	I	Power Supply Input Terminal	5V
54	V_{SS}	I	Ground Terminal	0V
55	TES6	I	Terminals for Testing (not used)	H
56	TES7			

Pin Number	Port's Name		Signal's Name	I/O	Initial State	Function and Operation	PLAY Mode	STOP Mode
1	R4	R40	BUS0	I/O	H	I/O Data Bus to Servo Control IC (TC9201)	"H" or "L"	"H"
2		R41	BUS1	I/O	H	"	"H" or "L"	"L"
3		R42	BUS2	I/O	H	"	"H" or "L"	"H"
4		R43	BUS3	I/O	H	"	"H" or "L"	"L"
5	R5	R50	CLSM	O	L	• Tray Motor Control Output "H" = Tray Closing Operation	"H"	
6		R51	OPNM	O	L	• Tray Motor Control Output "H" = Tray Opening Operation	"H"	
7		R52	CDF	O	L	• CD Function Signal Delivers a 100 ms, positive polarity pulse at PLAY-KEY ON	"L"	
8		R53	DPC	O	L	• DECK-PAUSE Control Signal Output "H" = Deck Start, "L" = Deck Stop	"H" or "L"	"L"
9	R6	R60	CDP	I	*	• CD-PAUSE Control Signal Input "L" = CD Pause State is entered. (PLAY State cannot be entered during "L")	"H" or "L"	
10		R61	OLT	I	*	• OPEN Limit Switch Signal Input Goes "L" when the tray is fully opened.	"H"	
11.		R62	CLT	I	*	• CLOSE Limit Switch Signal Input Goes "L" when tray has been closed and disc clamped.	"L"	
12		R63	SLT	I	*	• START Limit Switch Signal Input Goes "L" when pickup enters TOC area.	"H" or "L"	"L"

Pin Number	Port's Name		Signal's Name	I/O	Initial State	Function and Operation	PLAY Mode	STOP Mode
13	R7	R70	DG2	O	L	• Display Digit Selection Signal Output ("H"=this digit selected) • Output for KEY scanning		
14		R71	DG3	O	L	• Display Digit Selection Signal Output • Output for KEY scanning		
15		R72	DG4	O	L	• Display Digit Selection Signal Output		
16		R73	DG5	O	L	• Display Digit Selection Signal Output		
17	P1	P10	Seg A	O	H	• Segment ON/OFF Signal Output ("L"=this segment turns ON) (1) Segment a (2) Colon 1	"H" / "L"	
18		P11	Seg B	O	H	(1) Segment b (2) PAUSE Indicator	"H" / "L"	
19		P12	Seg C	O	H	(1) Segment c (2) Colon 2	"H" / "L"	
20		P13	Seg D	O	H	(1) Segment d (2) REPEAT Indicator	"H" / "L"	
22	P2	P20	Seg E	O	H	(1) Segment e (2) TNO Indicator	"H" / "L"	
23		P21	Seg F	O	H	(1) Segment f (2) LAP Indicator	"H" / "L"	
24		P22	Seg G	O	H	(1) Segment g (2) REMAIN Indicator	"H" / "L"	
25		P23	Seg H	O	H	(2) MEMORY Indicator	"H" / "L"	

Pin Number	Port's Name		Signal's Name	I/O	Initial State	Function and Operation	PLAY Mode	STOP Mode
26	K0	K00	KEY0	I	*	• KEY Sense Signal Input (1) PLAY (2) DISPLAY (3) STOP	When KEY is turned to ON position 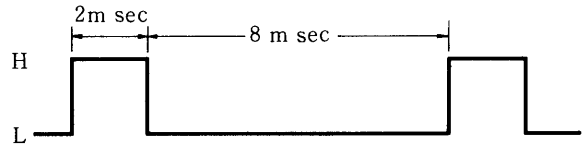	
27		K01	KEY1	I	*	(1) PAUSE (2) MEMORY		
28		K02	KEY2	I	*	(1) UP (2) REPEAT		
29		K03	KEY3	I	*	(1) DOWN (2) EJECT		
35	R8	R80	REM	I/O	"H" (Input Mode)	• Remote Control Data Signal Input	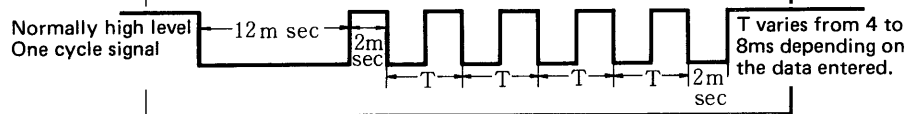	
36		R81	SYR	I	*	• Synchro-Rec Mode Setting Signal Input "L"=Synchro ON, "H"=Synchro OFF	"H" or "L"	
37		R82	OCLT	I	*	• Tray Motor's Overcurrent Detection Signal Input	"H"	
38		R83	DG1	O	L	• Display Digit Selection Signal Output ("H"=this digit selected)	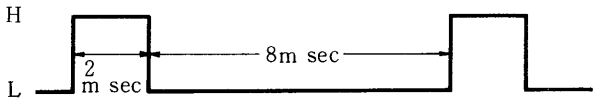	
39	R9	R90	BRK	O	L	• Disc Motor Brake Control Signal Output Delivers pulses for 1.2 sec when stopping disc motor.	2 m sec "H" 8 m sec "L" "L"	
40		R91	DA/CO	I/O	"H" (Input Mode)	• CD Bus Control Signal	"H" / "L"	"H"
41		R92	BUCK	O	H	• Shift Clock for Communication with TC9201	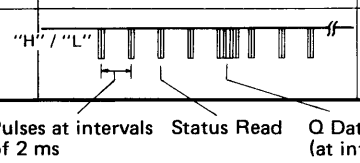	

Pin Number	Port's Name	Signal's Name	I/O	Initial State	Function and Operation	PLAY Mode / STOP Mode
21	V_{SS}	GND			Power Supply (0V)	"L"
30	TEST	TEST	I		Test Mode Terminal *Connected to GND	"L"
31	X_{IN}	4M	I		Base Clock Input Terminal	
32	X_{OUT}	NC	O		Open	
33	RESET	RESET	I		Initialize Signal Input "L"=Initialize operations take place	"H"
34	V_{HH}	V_{HH}			Power Supply for Memory Backup Connected to V_{DD}	"H"
42	V_{DD}	V_{DD}			Power Supply (+5V)	

VI. MAIN IC BLOCK DIAGRAMS

TA8101N

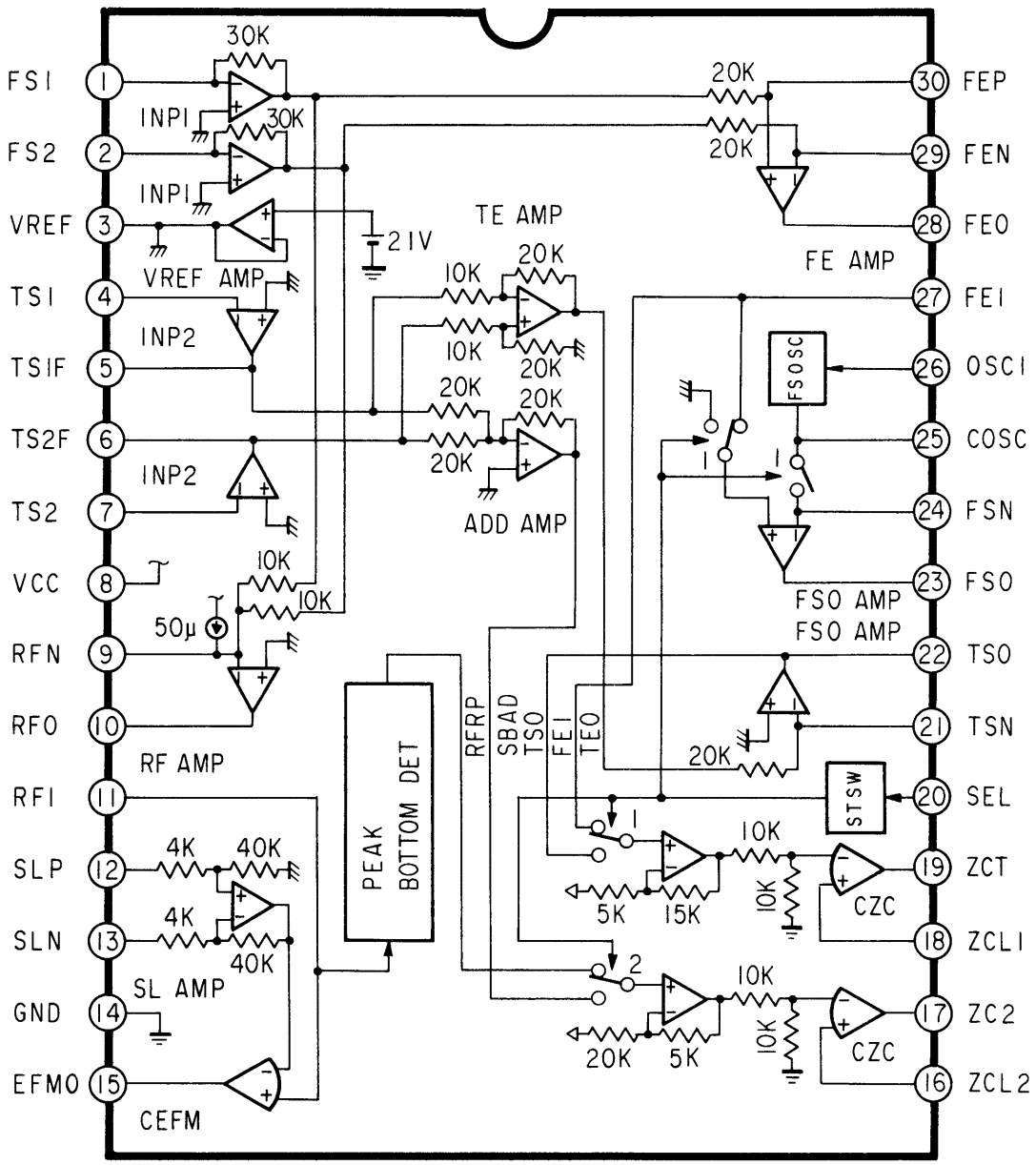

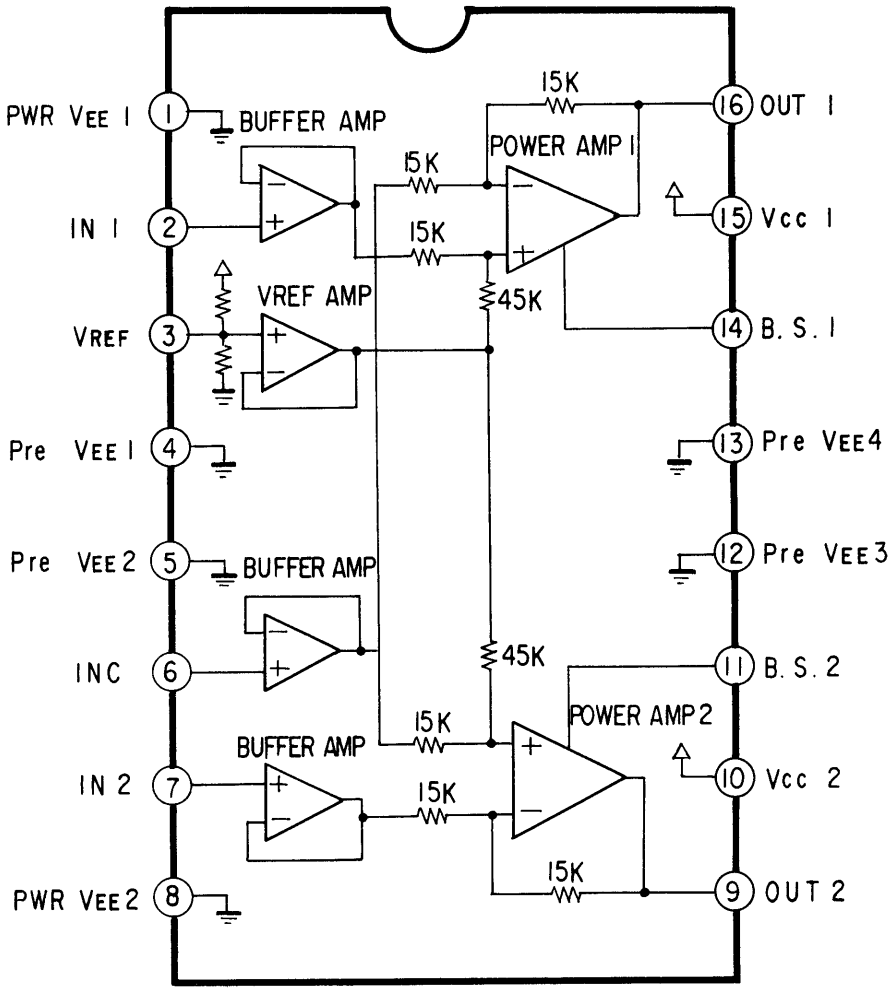

Pin Arrangement in TA8102

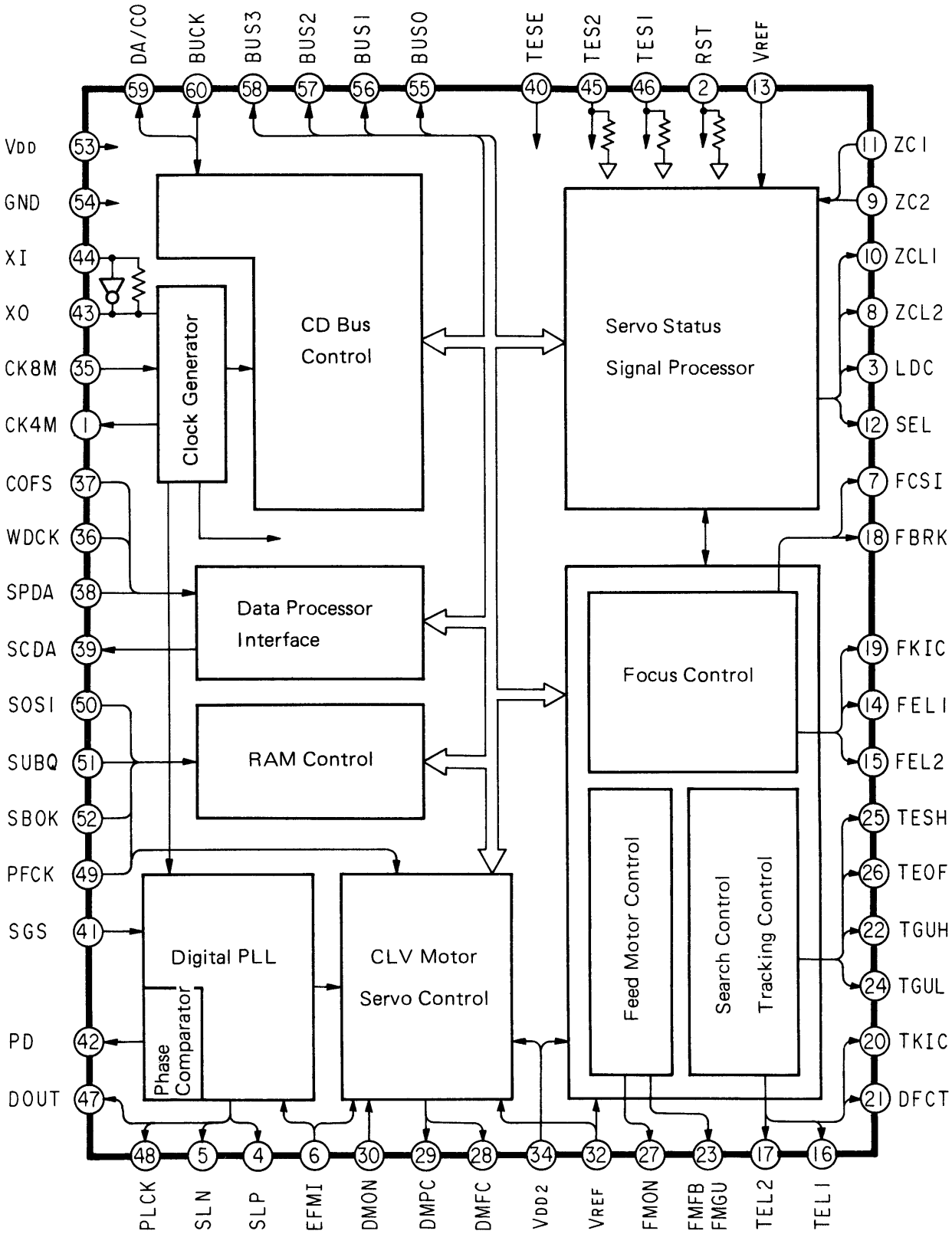
DA/CO
BUCK
BUS3
BUS2
BUS1
BUS0
TESE
TES2
TES1
RST
VREF
VDD
GND
XI
XO
CK8M
CK4M
COFS
WDCK
SPDA
SCDA
SOSI
SUBQ
SBOK
PFCK
SGS
PD
DOUT
ZCI
ZC2
ZCLI
ZCL2
LDC
SEL
FCSI
FBRK
FKIC
FELI
FEL2
TESH
TEOF
TGUH
TGUL
TKIC
DFCT
PLCK
SLN
SLP
EFMI
DMON
DMPC
DMFC
VDD2
VREF
FMON
FMFB
FMGU
TEL2
TELI
CD Bus Control
Clock Generator
Servo Status Signal Processor
Data Processor Interface
RAM Control
Focus Control
Feed Motor Control
Search Control
Tracking Control
Digital PLL
Phase Comparator
CLV Motor Servo Control

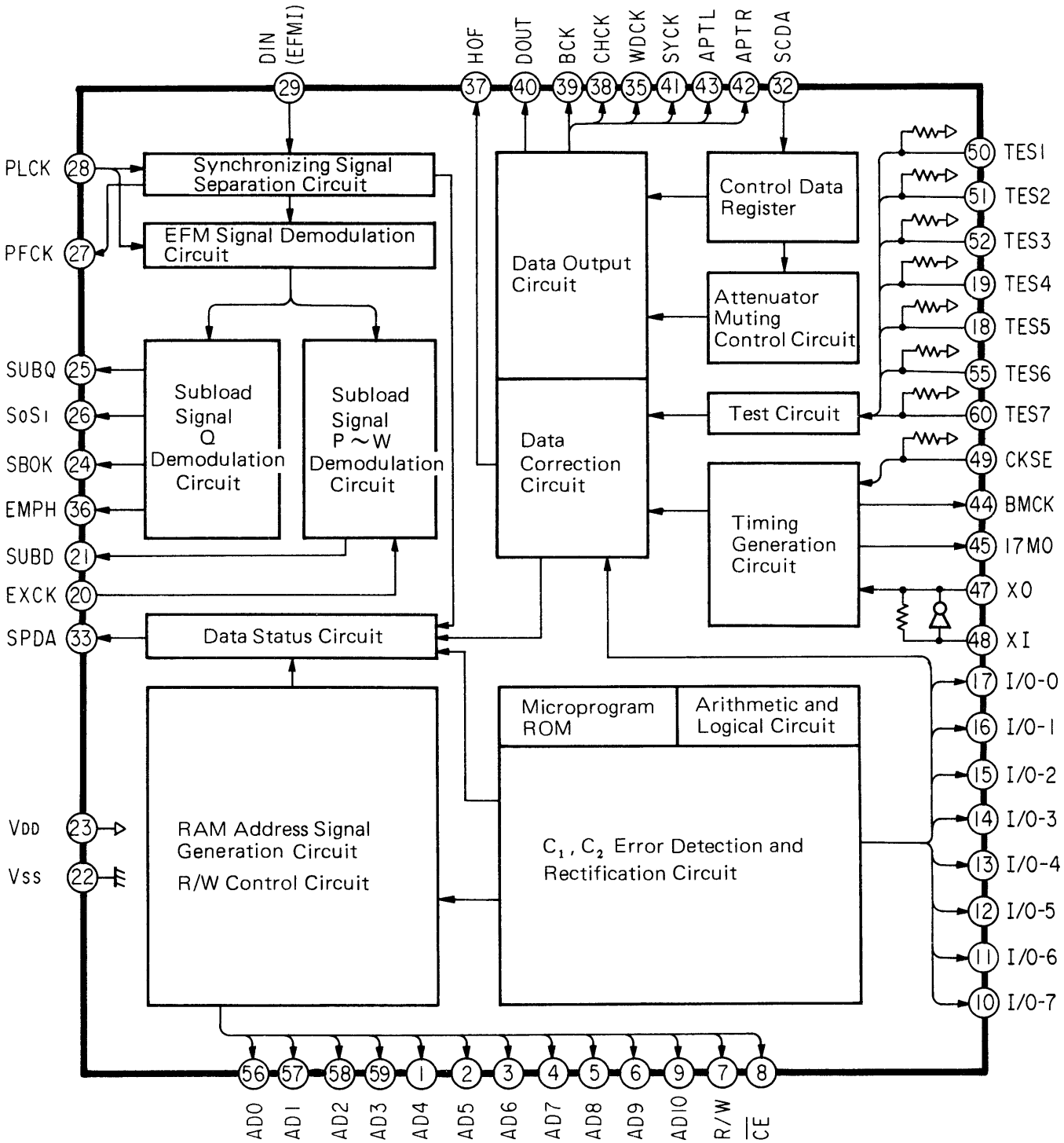
DIN (EFMI) 29
HOF 37
DOUT 40
BCK 39
CHCK 38
WDCK 35
SYCK 41
APTL 43
APTR 42
SCDA 32
PLCK 28
PFCK 27
Synchronizing Signal Separation Circuit
EFM Signal Demodulation Circuit
SUBQ 25
SOSI 26
SBOK 24
EMPH 36
SUBD 21
EXCK 20
SPDA 33
Subload Signal Q Demodulation Circuit
Subload Signal P ~ W Demodulation Circuit
Data Status Circuit
Data Output Circuit
Data Correction Circuit
Control Data Register
Attenuator Muting Control Circuit
Test Circuit
Timing Generation Circuit
50 TESI
51 TES2
52 TES3
19 TES4
18 TES5
55 TES6
60 TES7
49 CKSE
44 BMCK
45 I7MO
47 XO
48 XI
17 I/O-0
16 I/O-1
15 I/O-2
14 I/O-3
13 I/O-4
12 I/O-5
11 I/O-6
10 I/O-7
Microprogram ROM
Arithmetic and Logical Circuit
C_1, C_2 Error Detection and Rectification Circuit
RAM Address Signal Generation Circuit
R/W Control Circuit
VDD 23
VSS 22
56 AD0
57 AD1
58 AD2
59 AD3
1 AD4
2 AD5
3 AD6
4 AD7
5 AD8
6 AD9
9 AD10
7 R/W
8 CE

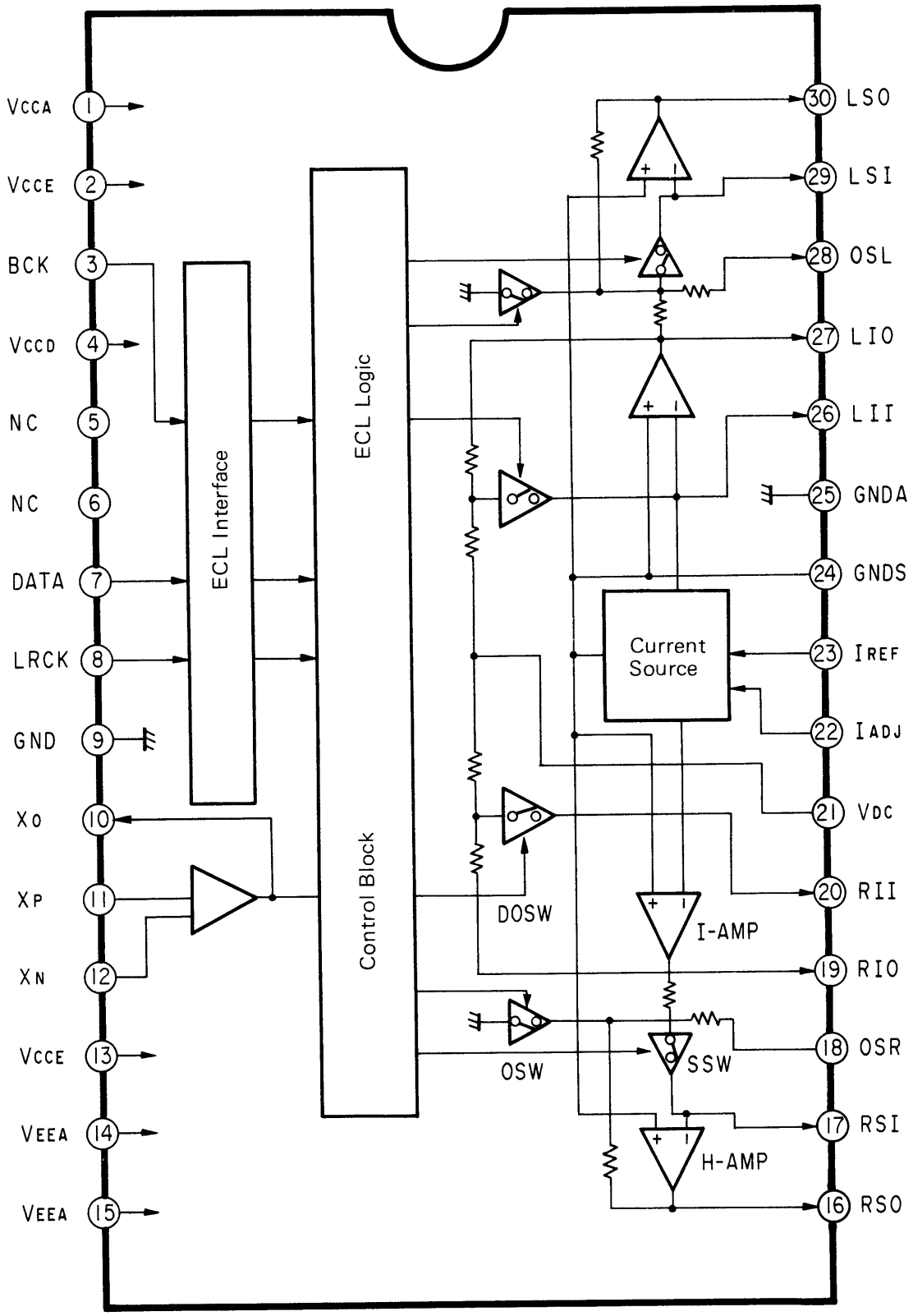
VCCA 1
VCCE 2
BCK 3
VCCD 4
NC 5
NC 6
DATA 7
LRCK 8
GND 9
XO 10
XP 11
XN 12
VCCE 13
VEEA 14
VEEA 15
ECL Interface
ECL Logic
Control Block
DOSW
OSW
Current Source
I-AMP
SSW
H-AMP
30 LSO
29 LSI
28 OSL
27 LIO
26 LII
25 GNDA
24 GNDS
23 IREF
22 IADJ
21 VDC
20 RII
19 RIO
18 OSR
17 RSI
16 RSO

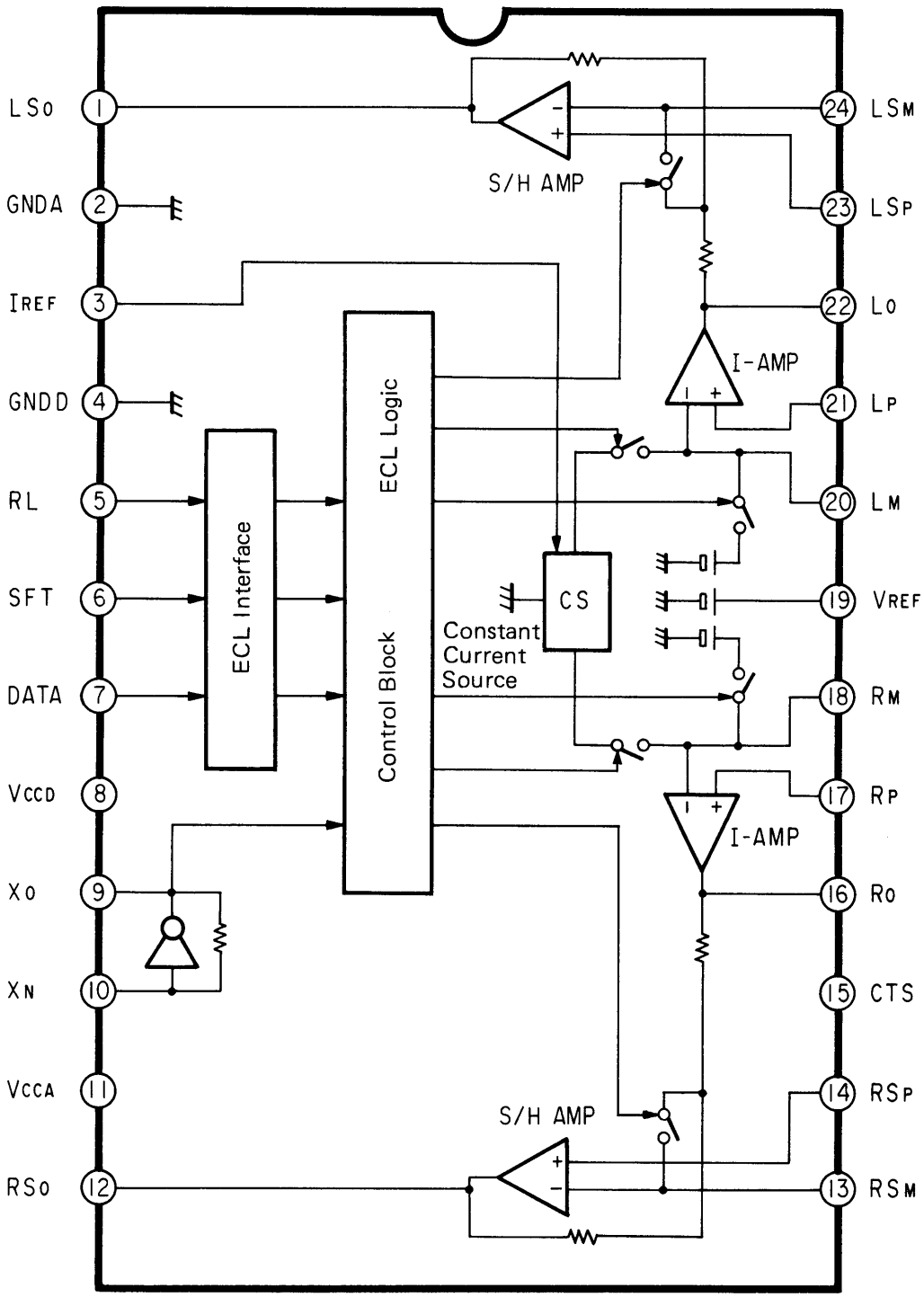
LSO
GNDA
IREF
GNDD
RL
SFT
DATA
VCCD
XO
XN
VCCA
RSO
LSM
LSP
LO
LP
LM
VREF
RM
RP
RO
CTS
RSP
RSM
S/H AMP
S/H AMP
I-AMP
I-AMP
ECL Interface
ECL Logic
Control Block
CS
Constant
Current
Source

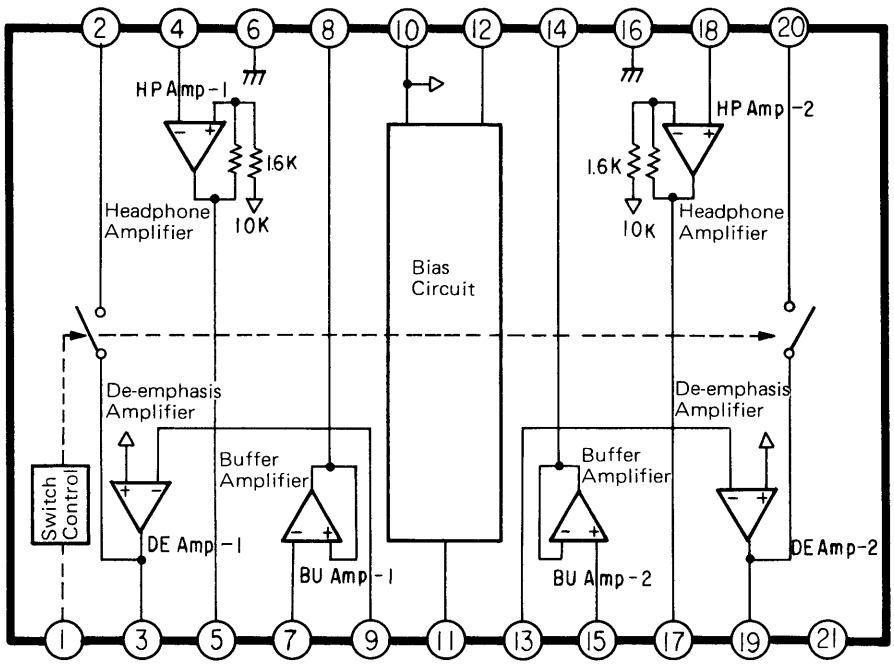
2
4
6
8
10
12
14
16
18
20
HP Amp-1
1.6K
10K
Headphone Amplifier
Bias Circuit
HP Amp-2
1.6K
10K
Headphone Amplifier
De-emphasis Amplifier
Buffer Amplifier
Switch Control
DE Amp-1
BU Amp-1
Buffer Amplifier
De-emphasis Amplifier
BU Amp-2
DE Amp-2
1
3
5
7
9
11
13
15
17
19
21

VII. OPERATION OF MECHANISM

XR-P9, XR-J9

OUTLINE OF MECHANISM SECTION

1. The mechanism used in the XR-P9 is developed for our first portable CD player. Differently from a conventional mechanism for home use, the disc is loaded by opening and closing the cover on the upper surface of the cabinet without use of the loading mechanism and only with the mechanism unit of the pickup.
   The clamper, installed on the cover of the cabinet, is applied to the disc receiver by closing the cover.
2. The mechanism consists of:

(1) The disc motor and disc table installed on the mechanism chassis.
(2) The pickup drive unit in which the pickup drive motor and reduction gear are unified on the motor mount.
(3) The pickup assy in which the rack gear and pickup adjustment unit are installed to the pickup.
(4) Other members: guide shaft, shaft holder, pickup cover assy, etc.
   Thus, the construction of the mechanism is greatly simplified.

3. The disc table is force-fitted differently from the conventional type. The center ring is fixed by the force-fitting of the cap in case of an initial product. Halfway, the fixing of the center ring is changed to that by hook (3 catches made of mold) for higher serviceability. For this reason, note that the player using the cap has a different clamper yoke.
4. The clamper clamps the disc by attracting the metallic section in the outer circumference of the disc receiver by its built-in magnet.
5. The suspension of the mechanism, made of solid rubber (not of a combination of spring and rubber as conventional), is suspended by the boss of the cabinet.

OPERATION

1. Mechanism Operation

The mechanism is greatly simplified as compared with the conventional type. For this reason, description is omitted except for the operation of the pickup drive motor section.

Operation of Pickup Carry Motor drive Section:

(1) When the pickup drive motor (26) rotates, the worm gear force-fitted into the motor shaft rotates so that the gears A (32) and B (31) rotate to move the rack gears A (17) and B (18) installed to the pickup. Thereby, the pickup is carried.
(2) The gears A (32) and B (31) and the rack gears A (17) and B (18) are paired and prevent backlash by means of spring.

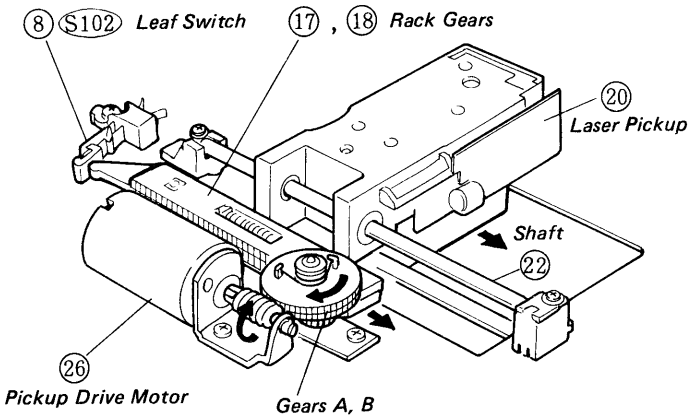

Fig. 1 Pickup Slide Mechanism

2. Replacement of Main Parts

2-1 Removal of Mechanism Assy

(1) Remove the flexible PC boards (for pickup and pickup carry motor) and the main PC board, then remove the four mechanism fixing screws (334).

Note: Be careful not to apply an excessive force to the flexible boards.

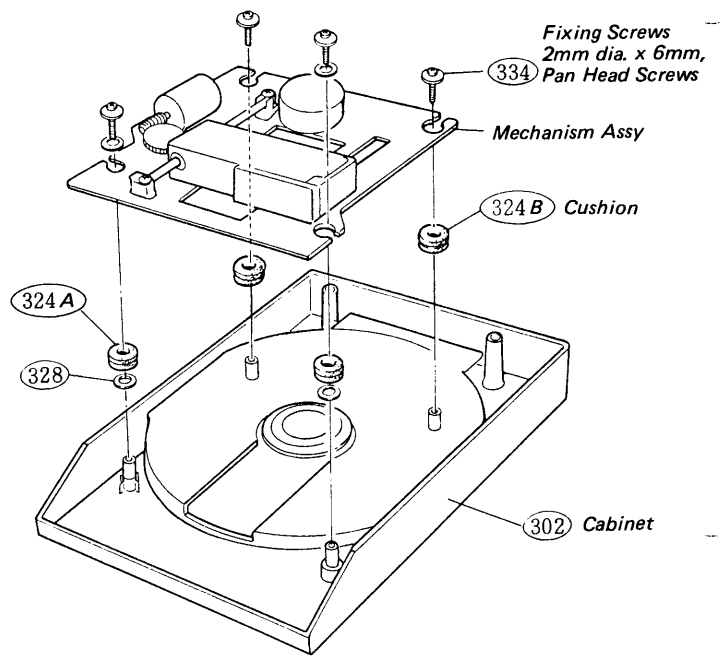

Fig. 2 Removal of Mechanism Itself

2-2 Replacement of Disc Clamper

(1) Remove the two fixing screws (330) and remove the disc cover assy (301).

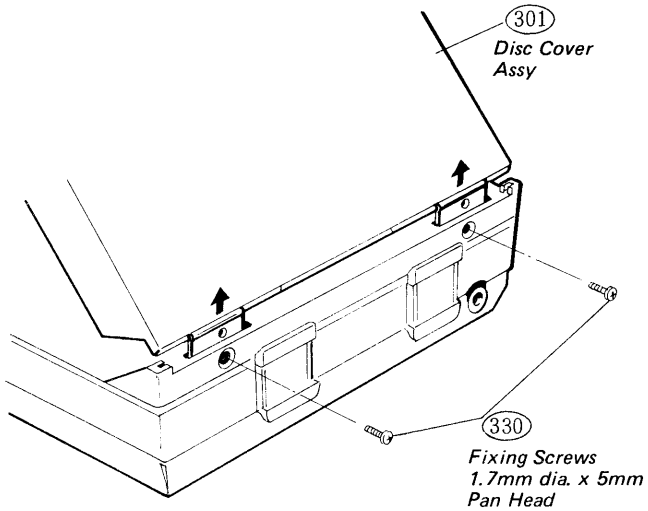

Fig. 3 Removal of Cover

(2) Draw out the hinge shaft (323) and remove the clamper holder (321) installed to the disc cover (301).
The clamper holder (321) is hooked to the side holders installed to the disc cover assy (301). Therefore, remove the clamper holder as shown in Fig. 4.

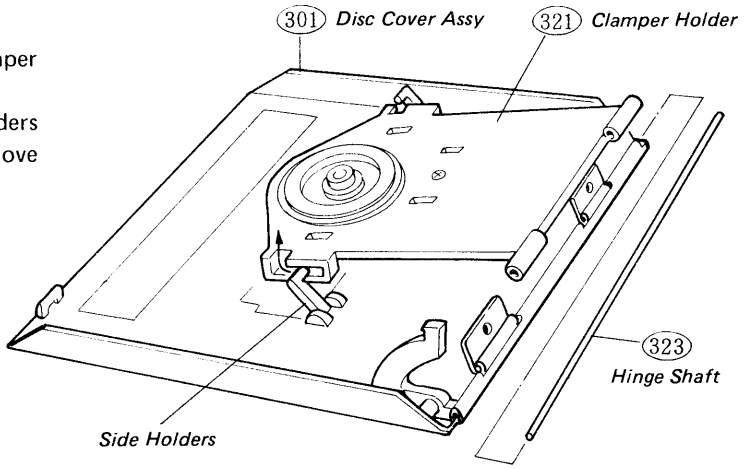

Fig. 4 Removal in Clamper Section

(3) Remove the one fixing screw (332) and remove the clamper plate (320). At this time, note that the spring 326 is installed between the clamper plate (320) and the clamper holder (321).

(4) Slide the clamper plate (320) in the direction of the arrow and remove the clamper from the clamper holder (321).

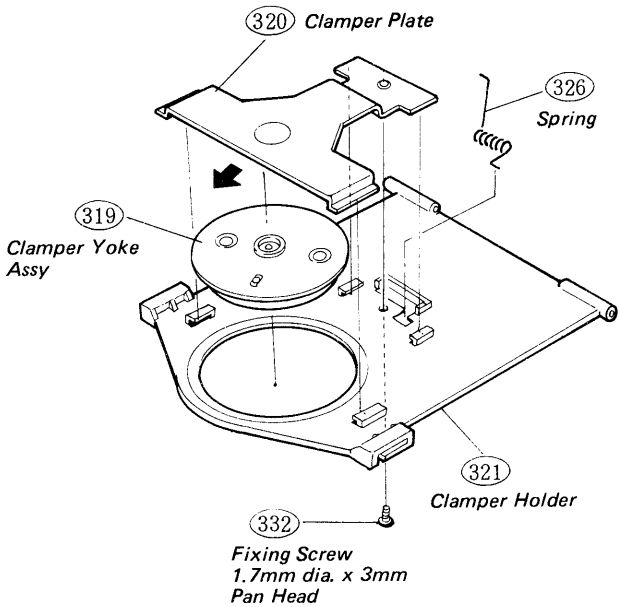

Fig. 5 Disassembly of Clamper Lever

2-3 Replacement of Pickup Drive Motor

(1) Unsolder the flexible PC board installed to the pickup drive motor (26) by a soldering iron.
(2) Remove the washer (15), then the gears A (32) and B (31).
(3) Remove the two fixing screws (28) of the motor fixture (27) and the two fixing screws of the motor, then replace the motor.
(4) Drive in the thrust screw (30) to a point at which it is in contact with the worm gear for adjustment.

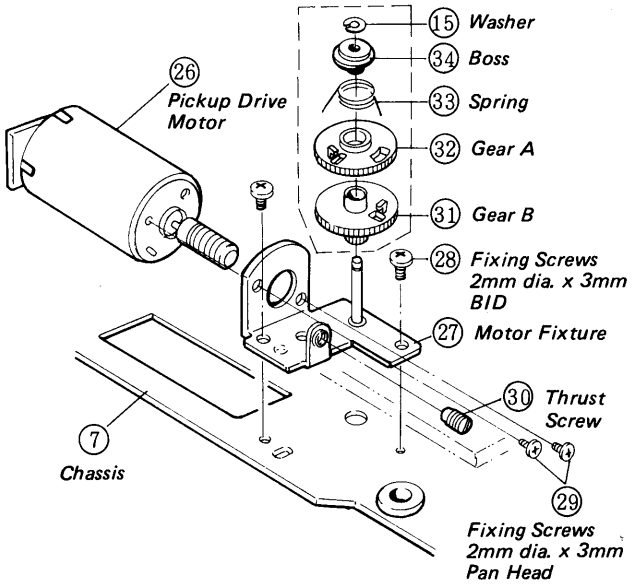

Fig. 6 Pickup Drive Motor

2-4 Replacement of Laser Pickup

(1) Remove the flexible PC board installed to the laser pickup and main PC board.
(2) Remove the washer (15), then the assy of the gears A (32) and B (31).
(3) Remove the two fixing screws (25) of the guide shaft (22) and the washer (37), then remove the guide shaft (22).
(4) Put to the notched section of the mechanism the pickup adjustment lever (13) installed to the pickup, slide the pickup in the direction of the arrow and remove it.
For more details, refer to "Adjustments".

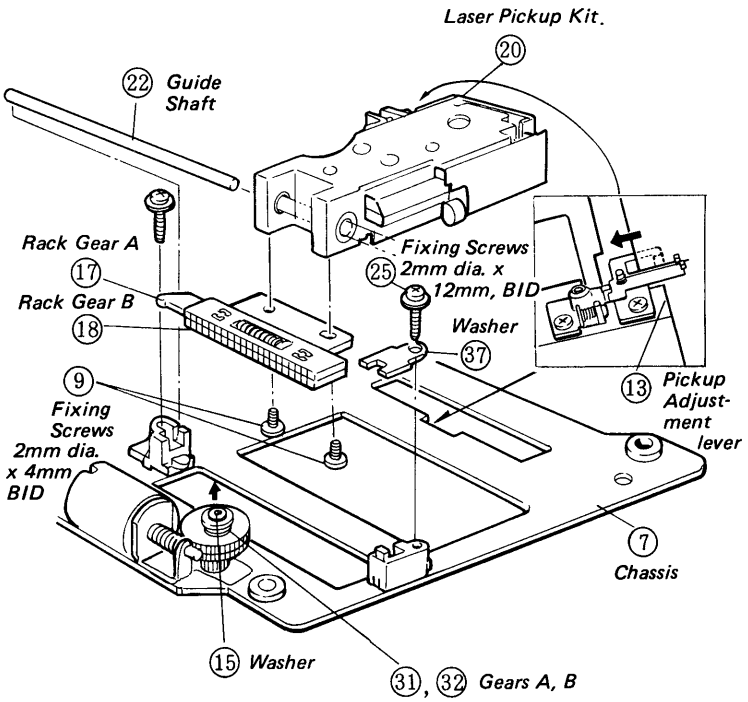

Fig. 7 Laser Pickup

2-5 Replacement of Disc Motor

The disc receiver is force-fitted into the motor shaft. For improved serviceability, the shape of the center ring is changed on the way of massproduction. Replace the disc motor in the following procedure:

Note: Be careful not to apply excessive force, as this deteriorates the player performance due to slanted disc, etc.

(1) Remote the cap (39) fixing the center ring by a screwdriver as shown in Fig. 8.

Note: The spring (4) under the center ring is reused. Be careful not to lose it.

(2) Draw out the disc table (5) by hand. For the player in which the center ring fixing cap is not used, draw out the disc receiver as it is.

(3) Set the center ring in the new disc receiver as shown in (B) of Fig. 9.

Note: Be sure to replace the disc table.

(4) Disconnect the two lead wires of the disc motor (16) and remove the two fixing screws of the motor, then replace the motor.

(5) As shown in Fig. 10, insert the new disc table (5) in the motor shaft by about half horizontally as shown in Fig. 10, and put on the removed disc receiver properly.

(6) Put in the positioning spacer (0.8 mm) between the motor and the disc table, and drive in the disc table by pushing its center to a point at which it hits the spacer. Remove the spacer.

Note: For the player in which the cap (39) fixing the center ring (3) is used, be sure to replace the clamper yoke.

For replacement of the clamper yoke assy, refer to article 2-2.

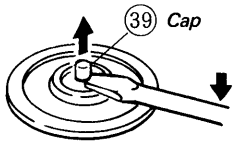

Fig. 8

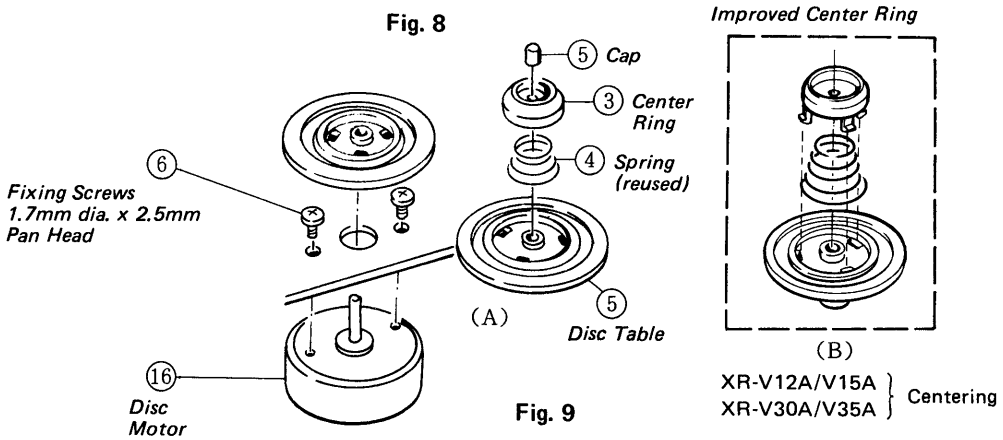

Fig. 9

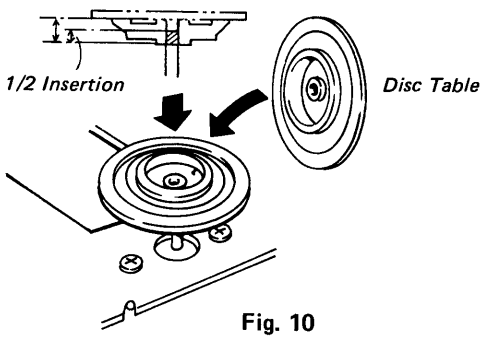

Fig. 10

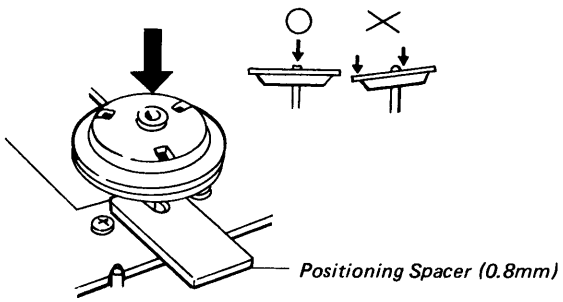

Fig. 11

XR-V12/V15(XR-30, XR-35) MECHANISM OPERATION

1. Outline of Mechanism (Points of Difference from Conventional Mechanism)

(1) In the mechanism of this player, the chassis for pickup and the chassis for loading are unified differently from the conventional mechanism. Of the suspension of the mechanism chassis, vibration is absorbed by the four rubber cushions on the mount of the cabinet bottom plate. The mechanism chassis is put on the suspension entirely.

(2) Of the loading mechanism, the disc tray is changed. The loading system is changed from conventional ascension/descension of the sub tray to ascension/descension of the disc by the four disc lift levers.
In addition, the disc tray driving mechanism is all visible from above.

(3) The pickup drive mechanism is greatly changed. The pickup speed is reduced by the spur gear via the worm and wheel, and the pickup is driven by the rack and pinion. Only the rack gears are stacked paired and the backlash eliminating device is taken.

(4) This mechanism features that the number of parts is greatly reduced as compared with the conventional mechanism and the parts requiring fine adjustment are eliminated.

2. Mechanism and Operation

2-1 Loading Mechanism

[1] When the player operates by the EJECT button at power ON

(1) First, let us explain the case where the disc tray closed is opened by pressing the EJECT button.
Fig. 1 shows the state that the disc tray is closed. The clamper lever is located on the lower step of the cam in which the disc is clamped. In this situation, the clamper is pressed against the disc directly by the clamper lever, not by the magnet as conventional, and is in point contact with the clamper lever by the steel ball force-fitted to the clamper.
The clamping force is applied by the clamper lever springs (compression spring) placed at the rear of the clamper lever. (The clamper lever springs are installed 2 places in the right side as viewed from the front. Note this in disassembly or assembly.)
The switch rink is provided under the cam gear. As the leaf switch (S101) (open/close limit switch) is pressed to the left as viewed from the front, the close side is ON.
Thereupon, when the EJECT button is pressed, the loading motor (15) rotates clockwise and the cam gear (4) rotates counterclockwise by the drive gears (5) and (6) as shown in Fig. 1. The clamper lever (2) is pressed up by the slant of the cam gear (4), and then the switch rink moves slightly to return the leaf switch (S101) to OFF (neutral point).

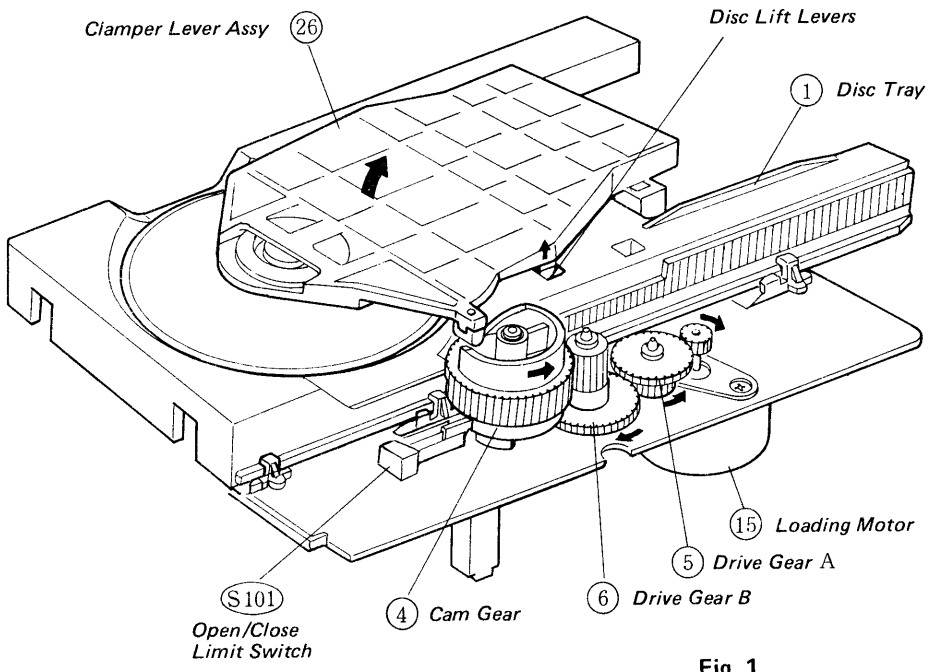

Fig. 1

(2) Fig. 2 shows the mechanism on the way of open operation. The clamper lever is located on the upper step of the cam. The disc in the disc tray is pressed up by the disc lift levers. Then, the no-tooth section of the lower half of the cam gear (4) engages with the rack gear placed at the right side of the disc tray (1) so that the disc tray (1) starts to move forwards.

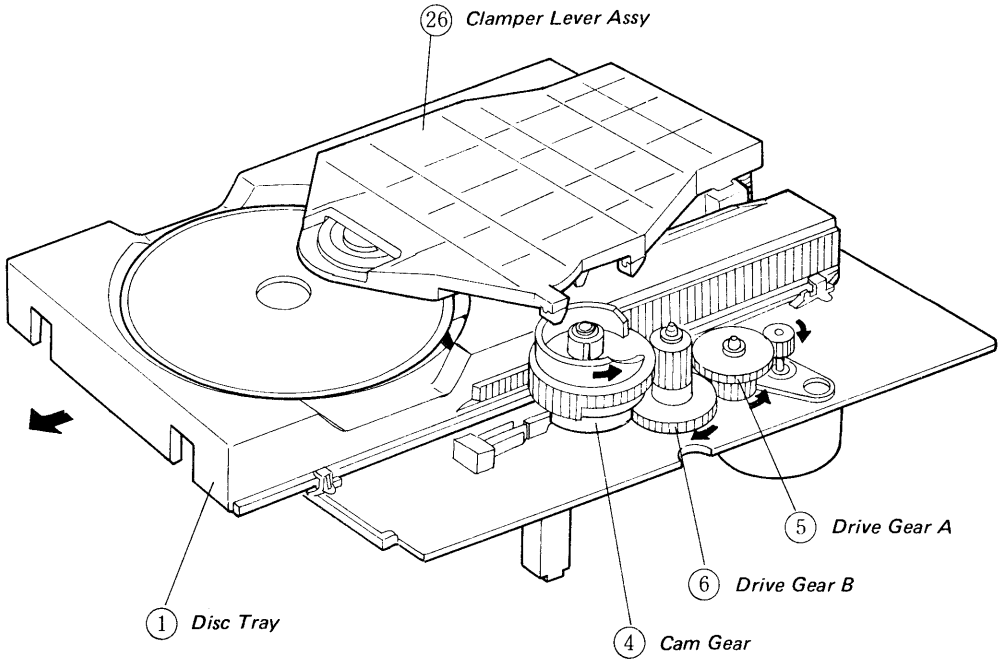

Fig. 2

(3) Fig. 3 shows the state that the disc tray is drawn out. The cam gear (4) makes about one rotation and a sliding section of the clamper lever (26) is put on the step of the cam. However, in this situation, as another sliding section of the clamper lever (26) is put on the rib of the disc tray (1), the clamper lever (26) remains raised. In addition, as the toothed section (toothed all circumference, above the no-tooth section) of the cam gear (4) engages with the upper side of the rack gear, the disc tray moves forwards as it is. In addition, the switch gear starts to rotate together with the cam gear (4).

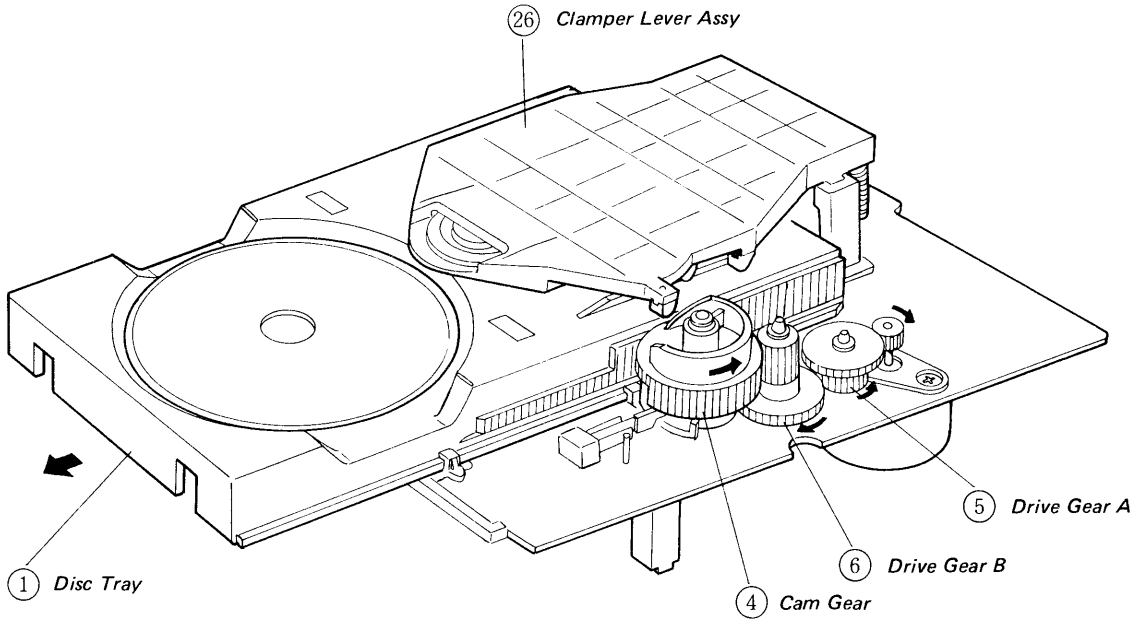

Fig. 3

(4) Fig. 4 shows the state that the disc tray (1) is completely opened. When the cam gear (4) makes about 1 and 2/3 rotations, the switch rink under the cam gear makes a little less than about 1 rotation. Thus, the leaf switch is pressed to the right as viewed from the front so that the open limit switch turns ON to stop the loading motor (15)
At this time, the disc tray stops by the tray stopper catch (described later) on the chassis.
The switch lever rotates with a delay of a little less than about 1 rotation against the rotation of the cam gear. Thus, the switch lever makes about 3/4 rotation by the convex part of the chassis and is stopped hitted by the stopper.
Therefore, the mechanism is so constructed that the cam gear (4) also stops after 1 and 2/3 rotations.

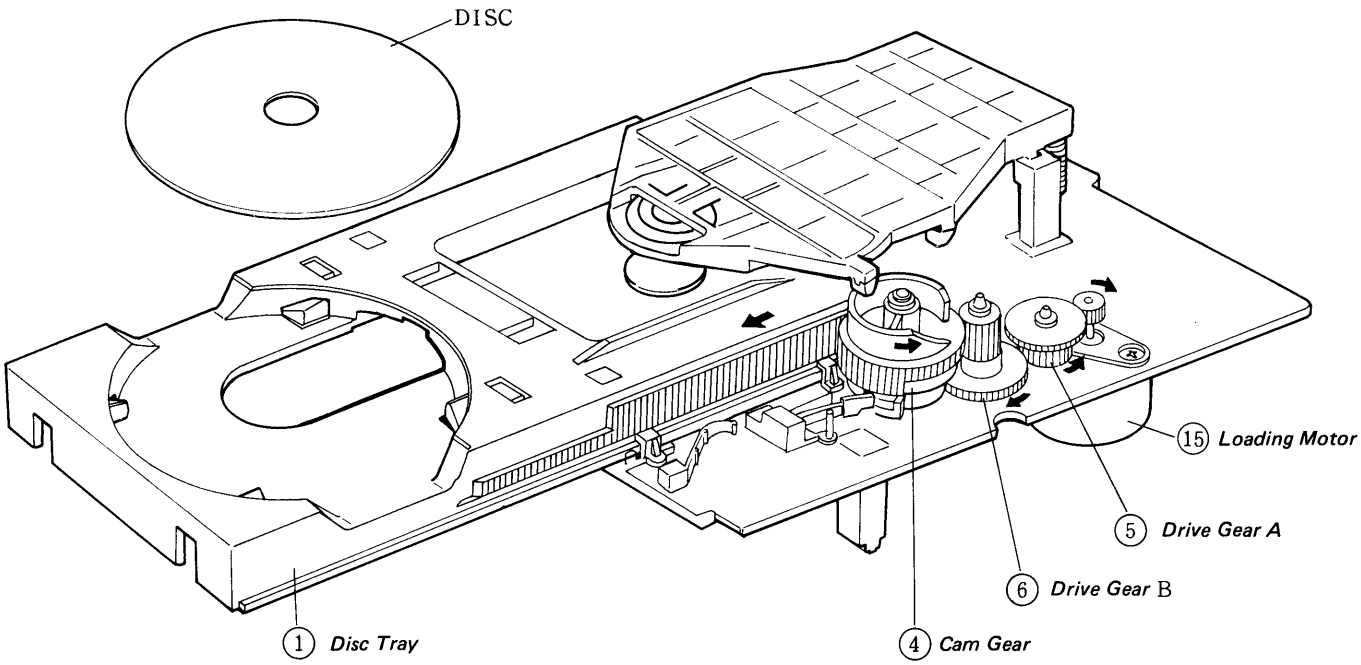

Fig. 4

(5) The close operation of the disc tray is made in the procedure reverse to that of items (1) – (4).
The close operation in this player can be made by the PLAY button as well as the EJECT button. Moreover, it is also possible to close the disc tray by pushing it in by hand (until the open limit switch turns OFF from ON).

[2] At power OFF

(1) In the state that the tray is closed, as the two convex parts of the clamper lever are put in the square holes on the upper surface of the disc tray to lock the disc tray, it cannot be drawn out. Except when removing the disc tray, perform the following procedure:

(2) Perform the operation in items (1) and (2) of article 2-1 and in Figs. 1 and 2 by rotating the loading motor (15) or the drive gear by hand. When the disc tray starts to move by engagement between the toothed section of the cam gear (4) and the rack gear at the right side of the disc tray, the disc tray can be drawn out by hand.

(3) Avoid handling the disc tray with no prearrangement, as this may cause damage to the convex parts of the clamper lever or to the disc tray.

2-2 Internal Construction of Disc Tray

(1) Fig. 5 shows a perspective view of the internal construction of the disc tray. The disc lifters R (8) and L (9) are provided at the right and left sides of the disc tray. The front side of each lifter is put into a hole of the disc tray and the rear side is put in a guide U groove of the disc tray, in which state it is rotatable by its catches.
In addition, a return spring, given for each lifter around its rear catch (note that the right and left return springs are different in the direction of winding), pushes the disc lifter upwards.

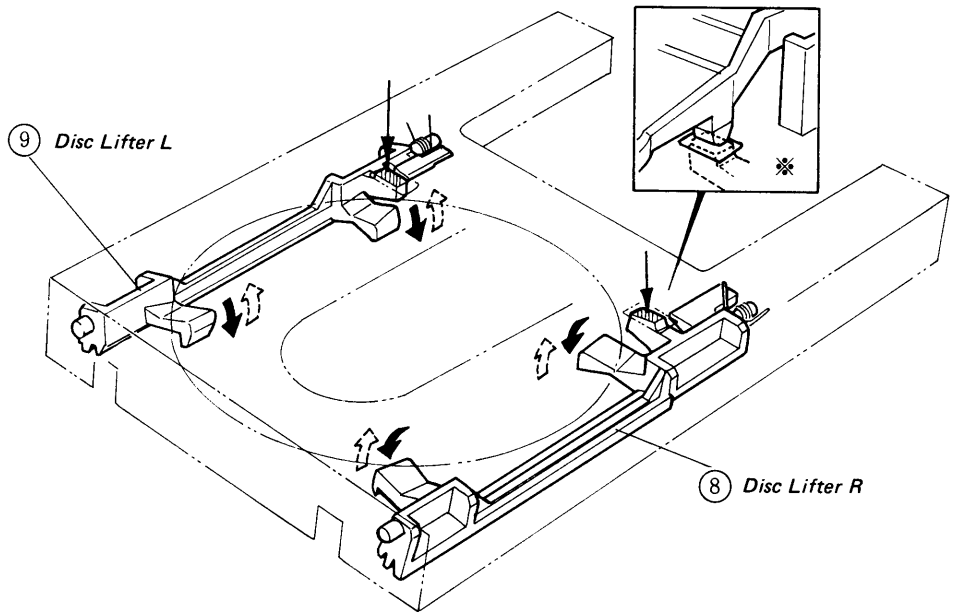

Fig. 5 Disc Tray and Disc Lifting/Lowering Mechanism

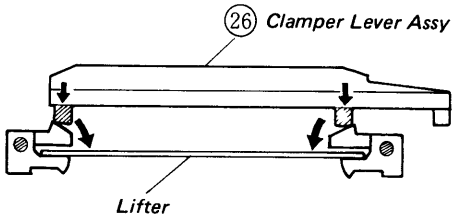

Fig. 6

(2) A disc lifter, when the convex part upper side (of slanted lines) of its rear is pressed by a convex part of the clamper lever, rotates against the force of the return spring and moves in the direction in which the disc is lowered down inside the tray (refer to the above drawing marked with ※ in Fig. 5 and see Fig. 6). The disc lifters each have the front and rear convex parts.. total four. The disc ascends and descends put on these parts. These parts are slightly tilted so that the disc is necessarily in contact with the edges only, thus protecting the disc signal face from damage.

(3) The two convex parts of the clamper lever press the disc lifters and at the same time lock the disc tray in the closed state by entering in the square holes of the disc tray. (Refer to the above drawing marked with ※ in Fig. 5.)

2-3 Removal of Disc Tray

(1) First, check that the disc tray is closed. At this time, the cam gear (4) rotates clockwise fully. Thereby, the switch rink is pressing the leaf switch (S101).
Next, lift the clamper lever by hand as shown in Fig. 7. Thereby, the convex parts (2 places) of the clamper lever are released from the square holes of the disc tray to unlock the tray. With the clamper lever kept lifted by hand, draw out the disc tray forwards.

(2) The cam gear (4) does not engage with the rack gear at the side of the disc tray at first but does halfway. Further, when the disc tray is drawn out, the triangular convex at the rear of the disc tray hits the tray stopper on the chassis to stop the disc tray. At this time, when the tray stopper is undone pressed by a thin screwdriver, etc., the disc tray can be removed.

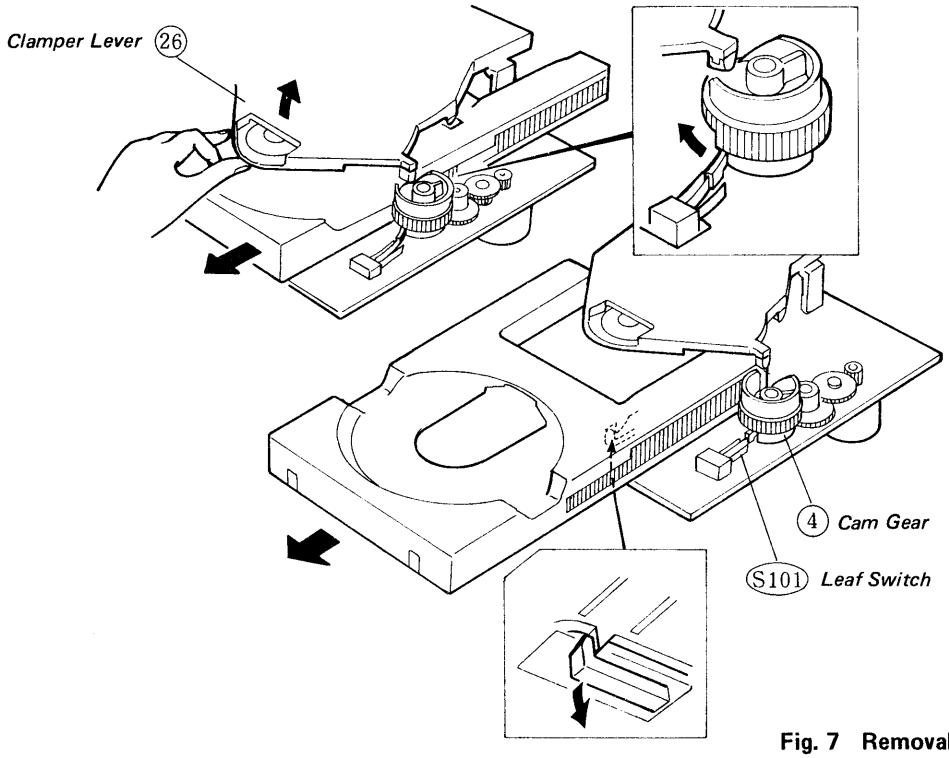

Fig. 7 Removal of Disc Tray

Notes:

1. Even when the tray stopper is undone with the cam gear engaged with the rack gear of the disc tray in normal operation (refer to item (2) of article 2-1), the cam gear is locked. Therefore, the disc tray cannot be removed.
2. When drawing out the disc tray by hand, hold the clamper lever lifted. If not so, the upper surface of the disc tray may be scratched by the convex parts of the clamper lever.

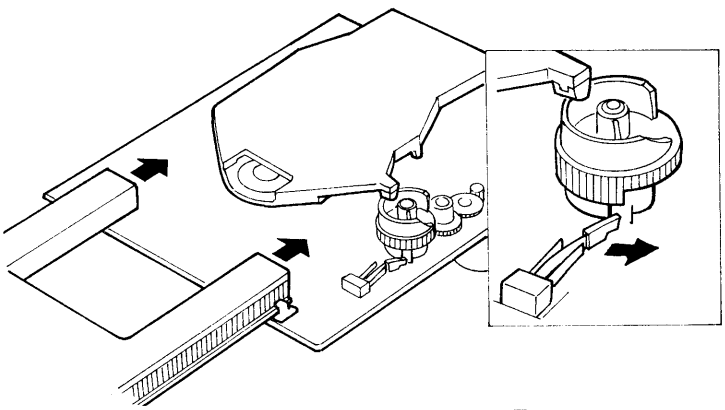

Fig. 8 Installation of Disc Tray

(3) Insertion of disc tray
First, rotate the cam gear (4) counterclockwise until it is locked. At this time, the right side of the leaf switch (S101) turns ON as viewed from its front to enter the open state (refer to the drawing within the square.)
Next, insert the disc tray. At this time, check that the guide rails of the disc tray are put on the tray guides positively. The tray guides are provided at the left and right in the front of the chassis, at the left and right in the middle and at the rear in the right side.
When the disc tray is pushed in, the cam gear engages with the rack gear at the right side of the disc tray. When it is pushed in as it is, the close state is entered.

3. Pickup Drive Mechanism (when driving the pickup to outside)

(1) In the operation of the pickup drive mechanism, the pickup motor (13) rotates so that the worm gear force-fitted into the motor rotates. As the worm gear engages with the gear B (12), rotate the gear B counterclockwise.

(2) The lower side of the gear B (12) engages with the gear A (11) and rotates clockwise in the direction of an arrow to actuate the rack gears A (18) and B (19).
These two rack gears A and B hold in the gear B to prevent back lash.

(3) The start limit switch (S102) detects the start position of the pickup.

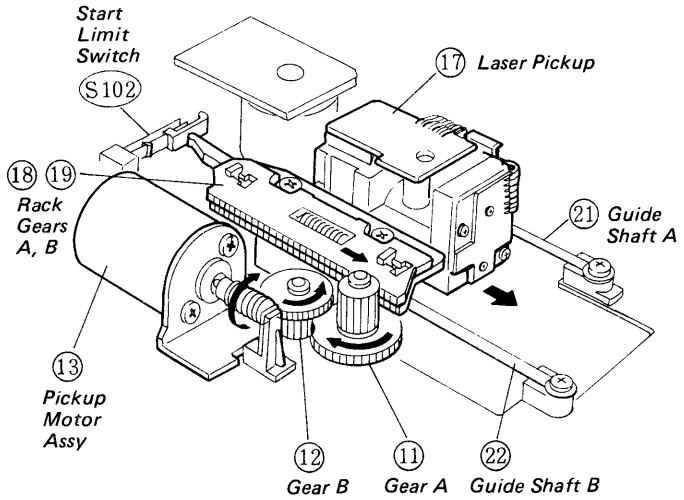

Fig. 9 Pickup Carry Mechanism

4. Replacement of Main Parts

4-1 Replacement of Pickup

(1) Remove the two fixing screws (30) of the rack gears A and B, and remove the rack gears.

(2) Remove the four fixing screws (31) of the guide shafts (21) and (22), disconnect the connector of the connection cord between the pickup and the disc motor mounting PC board, and replace the pickup.

Note: When setting in the rack gears A and B, be careful not to deform the leaf switch (S102).

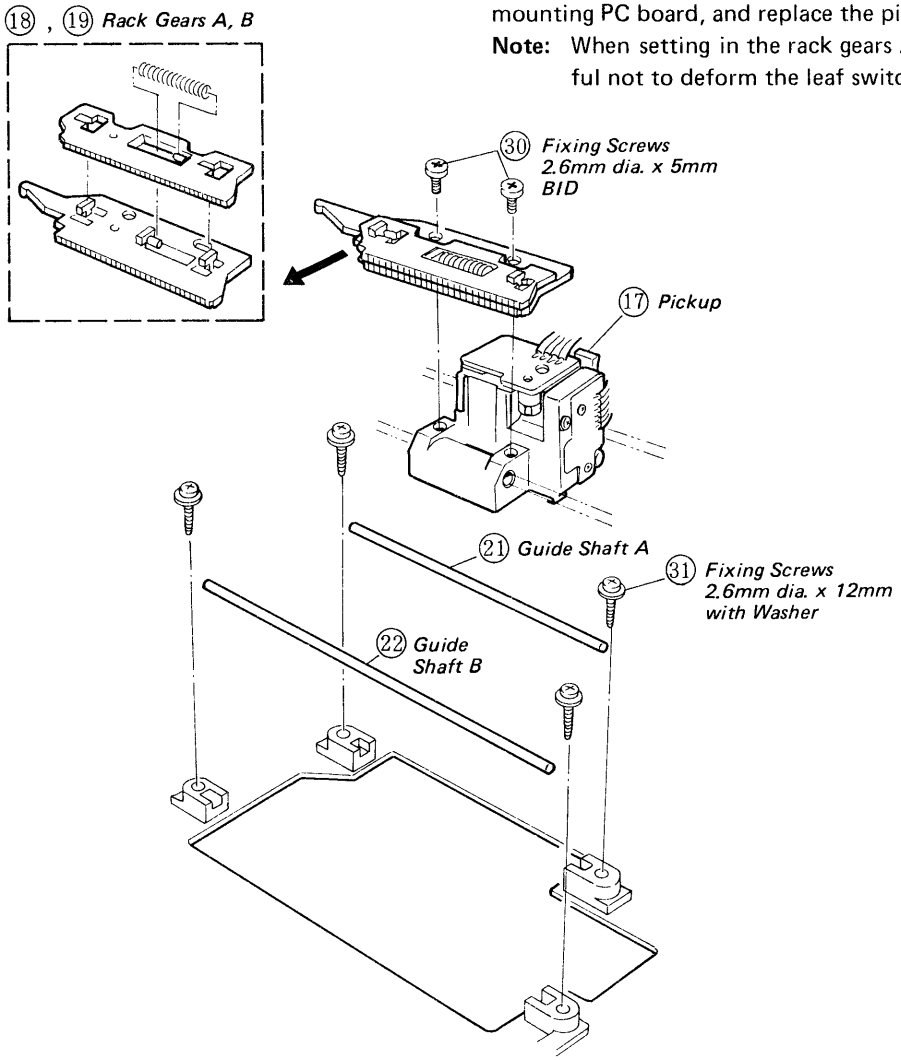

Fig. 10 Replacement of Pickup

4-2 Replacement of Pickup Drive Motor

(1) Disconnect the lead wire of the pickup drive motor ⑬, remove the two fixing screws ㉞ of the motor and replace it.

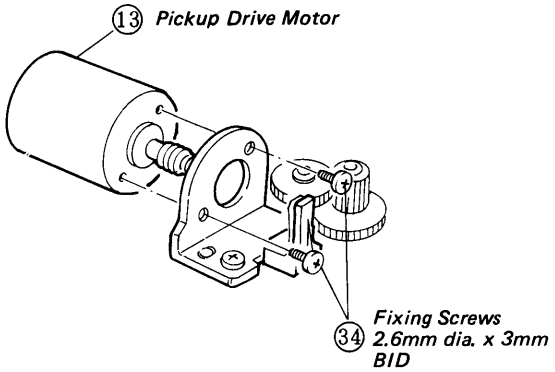

Fig. 11 Replacement of Pickup Drive Motor

4-3 Replacement of Disc Motor and Clamper Lever

(1) Remove the disc motor PC board. Then, open the clamper lever assy catch in the direction of the arrow in the square holes on the upper side of the clamper and remove the clamper lever ㉖. At this time, be careful not to lose the spring ㉙.

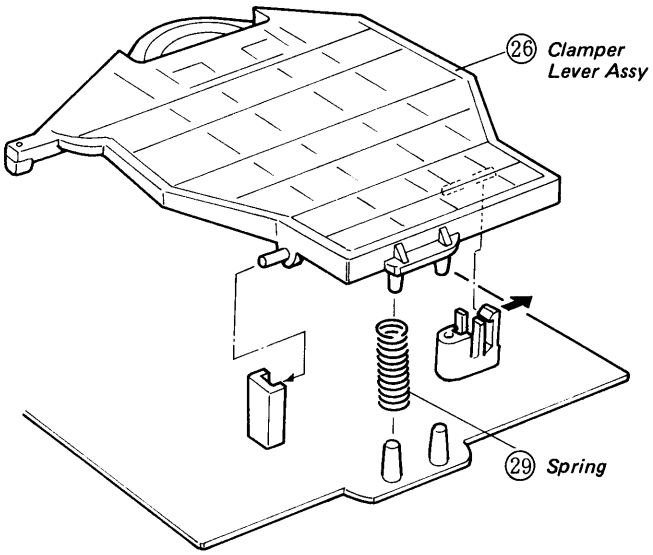

Fig. 12 Removal of Clamper Lever

(2) Draw out the disc table by hand and remove the motor PC board. Then, remove the two fixing screws 36 of the disc motor and replace it.

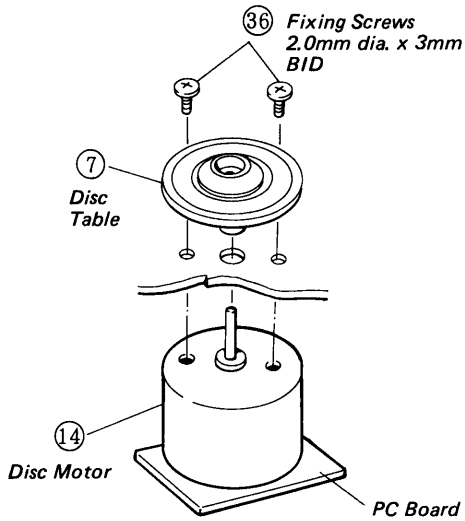

Fig. 13 Replacement of Disc Motor

(3) Set the positioning spacer to the motor shaft as shown in Fig. 14, and push in the disc receiver horizontally until it hits the spacer. (After the disc receiver is installed, remove the spacer.)

Note: There are two kinds of mechanisms corresponding to the using pickups and thickness of positioning spacer is different for each mechanism as shown in Fig. 14.
Correct one which is attached with service part of disc motor

(4) Solder the motor PC board and set the mechanism assy in the player.

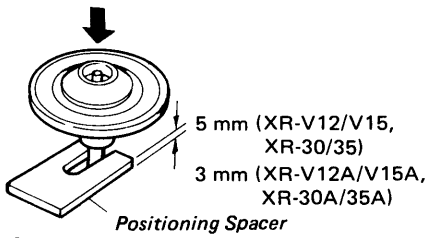

Fig. 14

4-4 Replacement of Loading Motor and Loading Gears

(1) Unsolder the motor terminal on the loading motor PC board, remove the one fixing screw of the board and take it out.

(2) Remove the two fixing screws (35) of the loading motor (15), take it out and replace.

(3) Remove the bushing (28) and replace the drive gear A (5).

(4) Remove the bushings (27) and (28), then the cam gear (4), and replace the drive gear B (6).
In addition, put together the cam gear (4) and the switch lever (10) as shown in Fig. 15 and set them in.

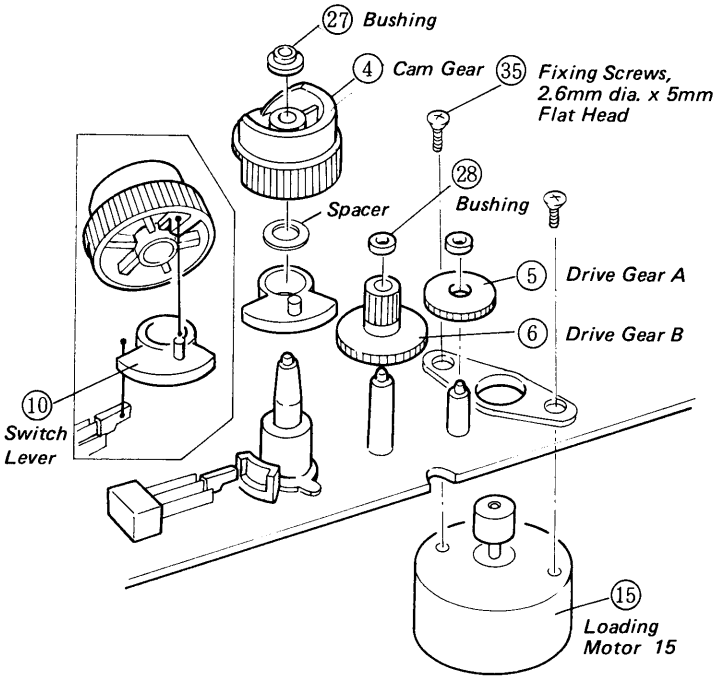

Fig. 15 Removal of Loading Motor and Loading Gear

5. Transportation Lock of Pickup

Of the transportation lock of the pickup, the pickup fixing catch is undone by rotating the cam lock by a screwdriver about 160° counterclockwise as shown in Fig. 16, differently from conventional.

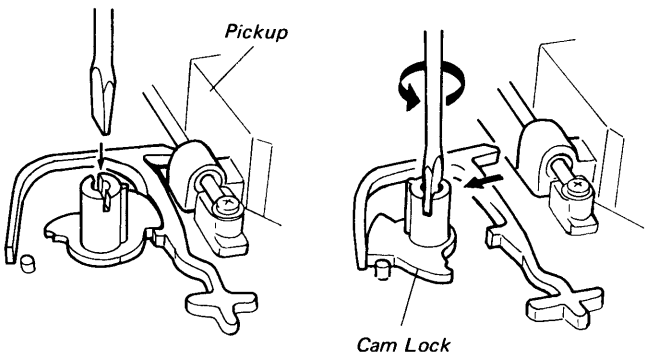

Fig. 16 Transportation Lock of Pickup

MECHANISM EXPLODED VIEW AND LUBRICATION POINTS

XR-P9, XR-J9

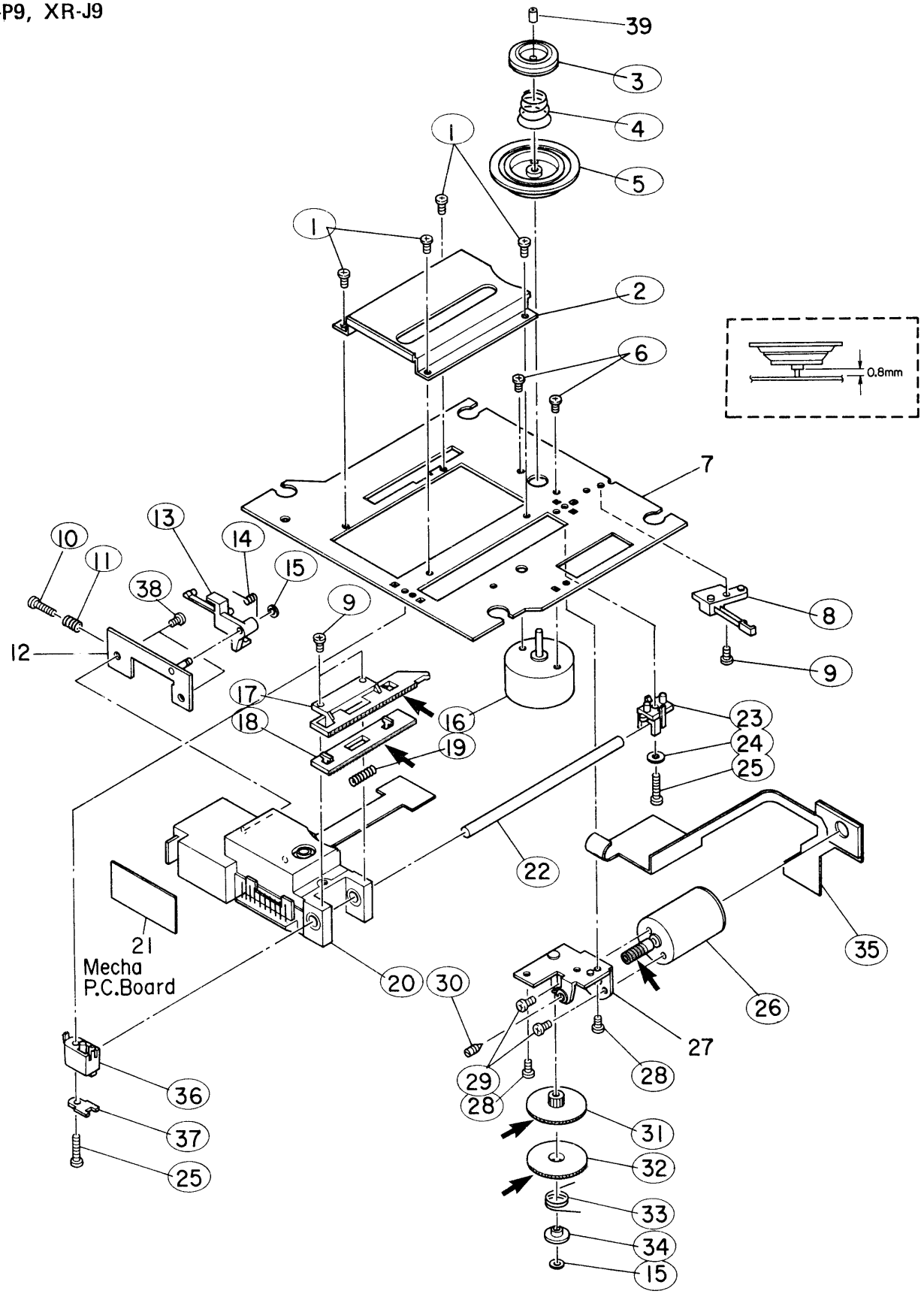

XR-V12/V15(XR-30, XR-35)

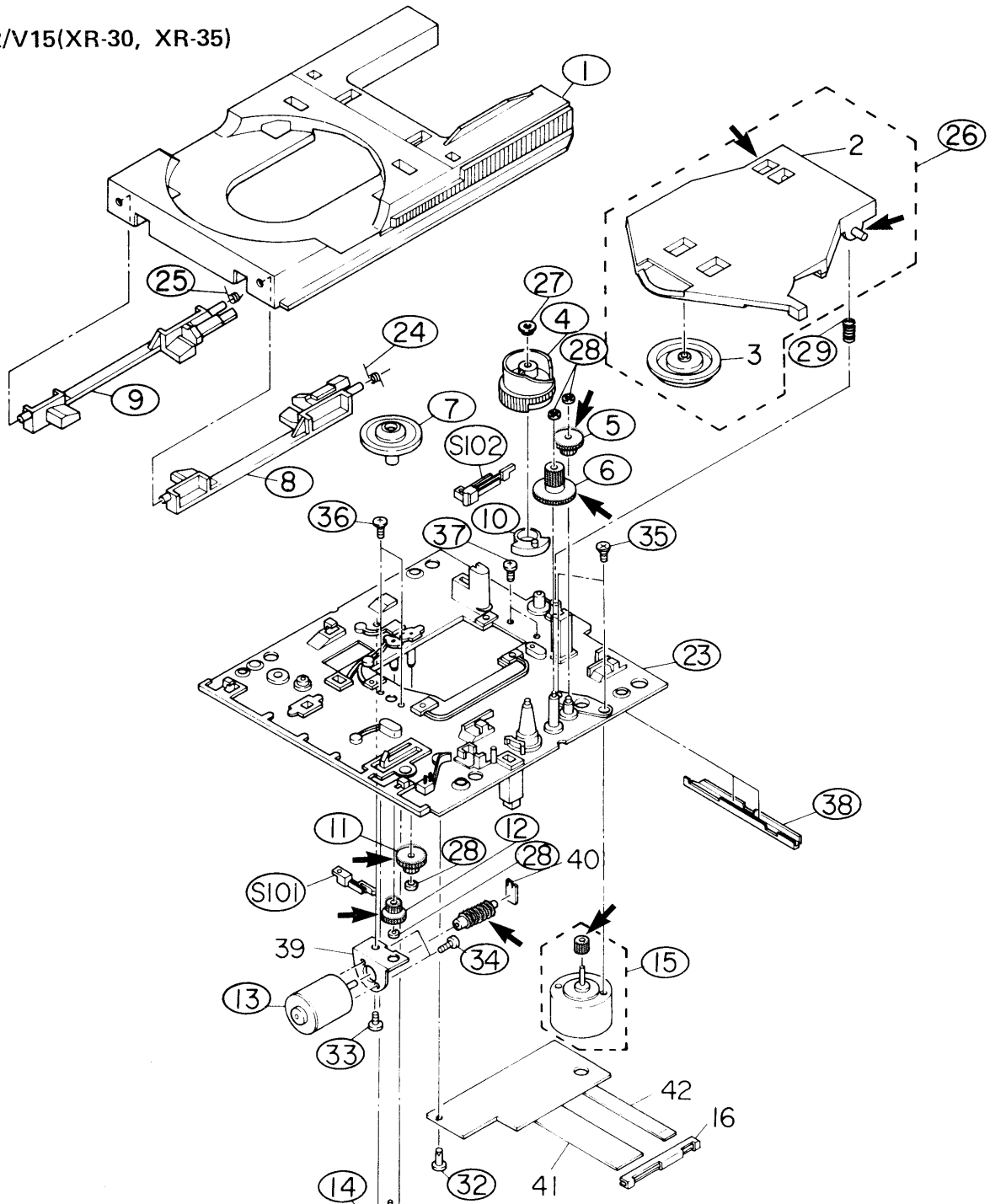

OPH-21

Note: For the player of which the type name has A, use OPH-41.

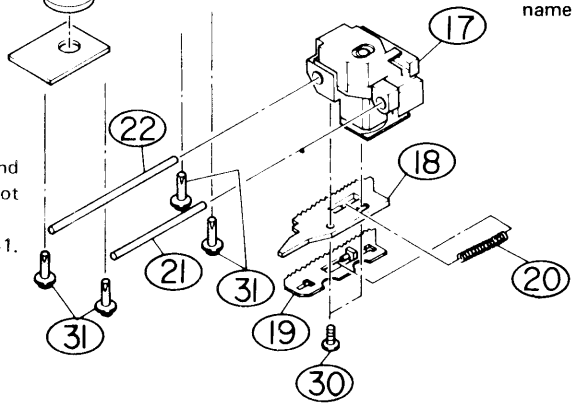

Note: Pickups of XR-V12/A, XR-V15/A, XR-30/A and XR-35A are different respectively and are not changeable each other. (Refer to service data)

Note: Unit with A after its model name employs OPH-41.

VIII. PICKUP REPLACEMENT AND ADJUSTMENT

PICKUP REPLACEMENT XR-P9, XR-J9

Caution on Replacement:

A laser diode mounted inside a pickup is very susceptible to external static electricity. Though it will operate right after replacement, it may be subject to bad offection during replacement or its life may be shortened. When replacing, use conductive gum mat, soldering iron with ground wire, etc. to protect the laser diode from damage by static electricity.

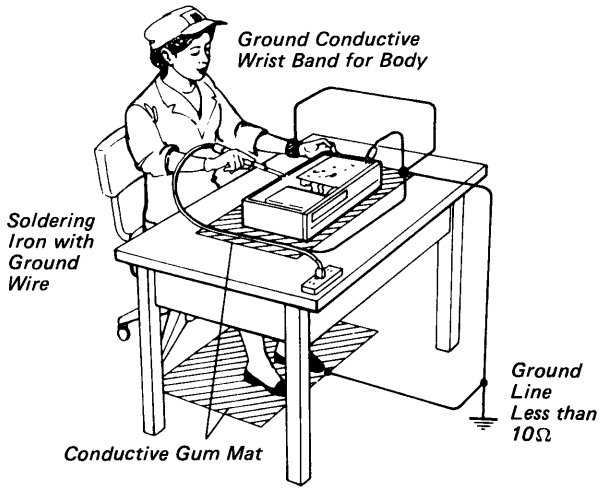

Fig. 1

1. Remove cabinet bottom plate referring to Disassembly Instructions.

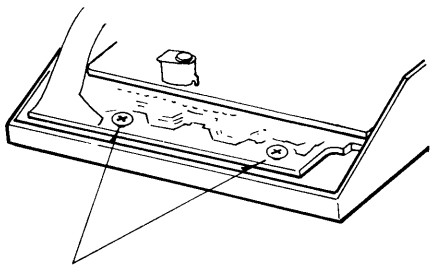

Fig. 2

2. Fix operation P.C. Board temporarily for your convenience to push operation buttons when adjusting.

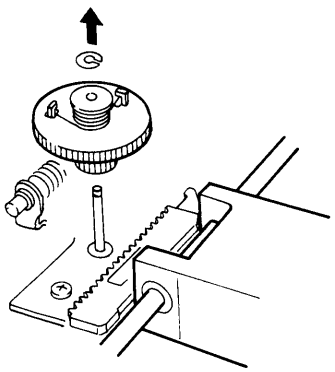

Fig. 3

3. Remove gear A and B assembly shown in Figure 3 by removing one washer.

4. Remove two screws fixing guide shaft, unsolder Main P.C. Board side of Flexible P.C. Board attached to pickup.
   When replacing pickup and Flexible P.C. Board mounted to pickup, first cut off 4 pins that Flexible P.C. Board is soldered to, then remove Flexible P.C. Board on pickup assy using solder wick.
   Be sure to peel off any double sided tape that may be stuck on Flexible P.C. Board.

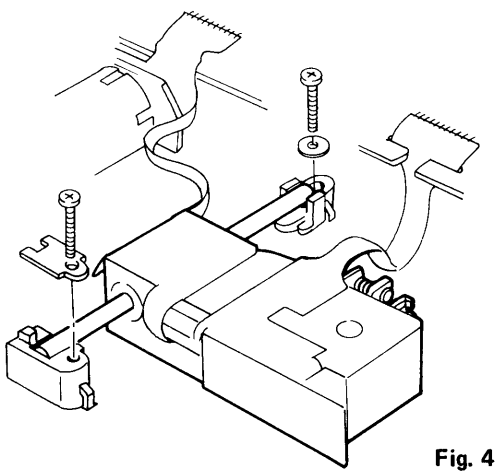

Fig. 4

5. Insert the short pin enclosed as repair parts into removing pickup.

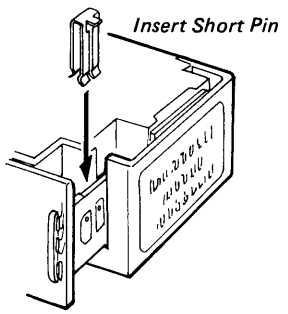

Fig. 5

6. Raise the guide shaft side of the pickup a little and align the pickup height adjusting lever to the cutting of mechanism chassis (Fig. 6), then pull the lever to the guide shaft side and remove the guide lever. (Fig. 6).

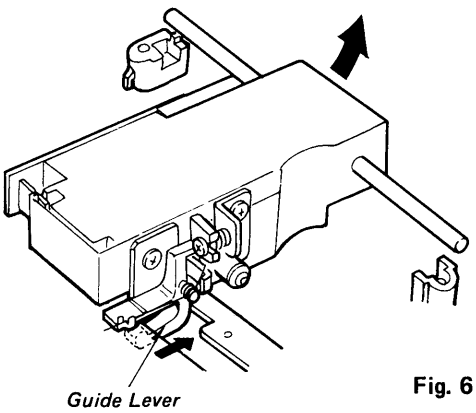

Fig. 6

7. Unsolder the APC board terminal attached to pickup and detach the board. (Attach with both adhereing tape.)

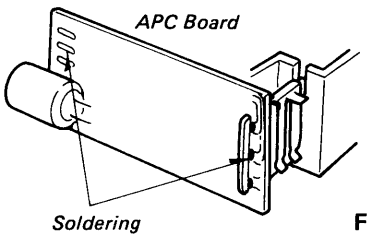

Fig. 7

8. Remove 2 screws securing rack gear and detach the gear.

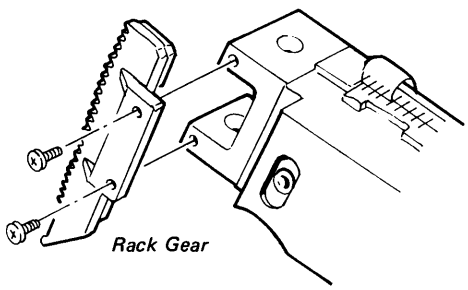

Fig. 8

9. Remove pickup adjustment lever by removing two screws fixing it. (Figure 9)

10. Assemble pickup according to the steps required for laser power coarse adjustment using W sided tape to secure the flex P.C. Board and APC P.C. Board to pickup, but don't install pickup assembly in unit yet.
    1) Assemble pickup adjustment lever, rack gear, APC P.C. Board, and Flexible P.C. Board of APC P.C. Board. After assemblying APC P.C. Board, remove shorting pin.
    2) After laser power adjustment is completed, install the pickup on mechanism.

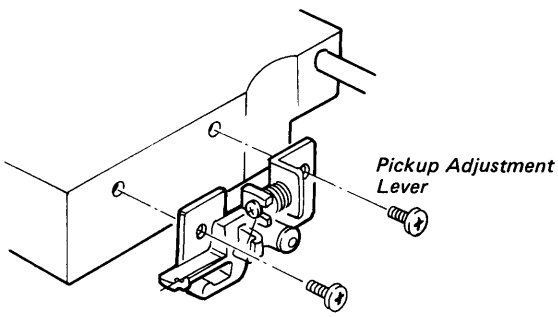

Fig. 9

ADJUSTMENT XR-P9, XR-J9

1. Adjustment Locations

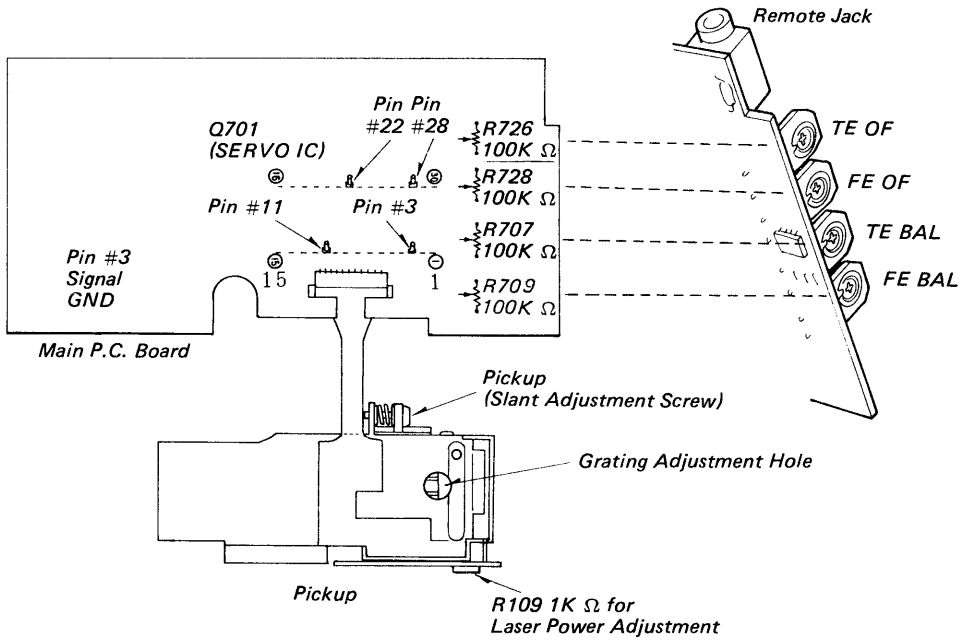

Fig. 10

2. Power Supply

This unit employed a separate type power system. So, solder the AC adapter and the unit as shown in Figure 11 when servicing. Tune on power supply interlock SW S901 by placing holded paper in right hand slot to activiate SW.

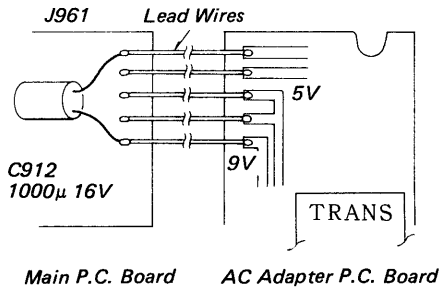

Fig. 11

3. Test Terminal Temporary Soldering

Solder jumper wires to pins #3, #11, and #22 of Q701 TA8101N SERVO IC temporarily.

4. Unit Position for Adjustment

Position unit as shown in Figure 12 when making adjustments, and it allows easy access to adjustment points (except pickup laser power coarse adjustment).

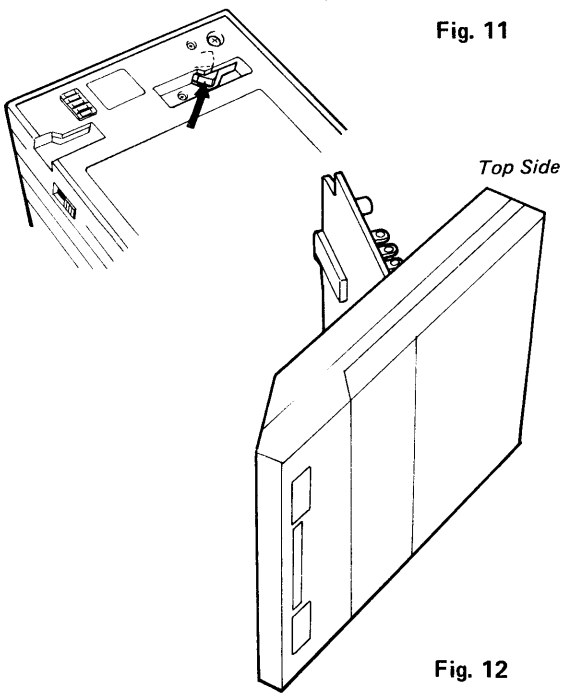

Fig. 12

5. Laser Power Coarse Adjustment

(Perform following adjustment before installing pickup to mechanism.)

1. **Note:** R109 1K ohm laser power adjustment VR on APC P.C. Board should not be turned before the adjustment.
2. Connect Main P.C. Board and pickup Flexible P.C. Board with two wire leads temporarily. (Figure 13)
   Note: Shorting pin should be removed from pickup.
3. Set unit to ON.
   Adjust R109 APC adjustment VR on APC P.C. Board so that meter indicates 150μW with laser power meter sensor applied to pickup lens. (Figure 15)
4. After laser power coarse adjustment is completed, install pickup on mechanism and solder Flexible P.C. Board.

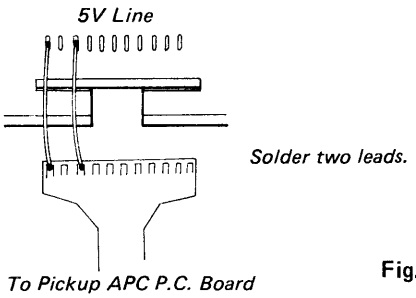

Fig. 13

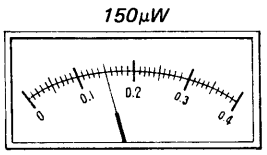

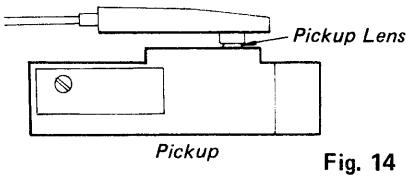

Fig. 14

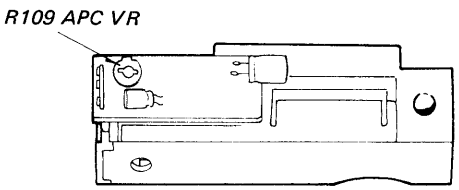

Fig. 15

6. Tracking Error Blance Coarse Adjustment

1. Connect oscilloscope to pins #3 and #22 of Q701 SERVO IC. (Figure 16)
2. Set test disc YEDS-7 in tray.
3. Set power of unit to ON and press play key. Hold pickup drive motor warm gear with your hand to stop its rotation while the unit is searching.
4. Adjust R707 100K ohm TE BAL VR so that tracking error signal waveform obtaines ±10mV with UP key pushed. (Figure 17)
   Once UP key is pushed, it allows operation for about 20 seconds. If the operation stops, push the UP key again.

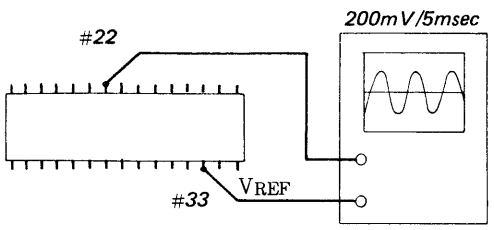

Fig. 16

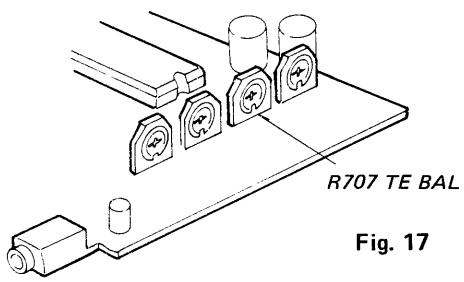

Fig. 17

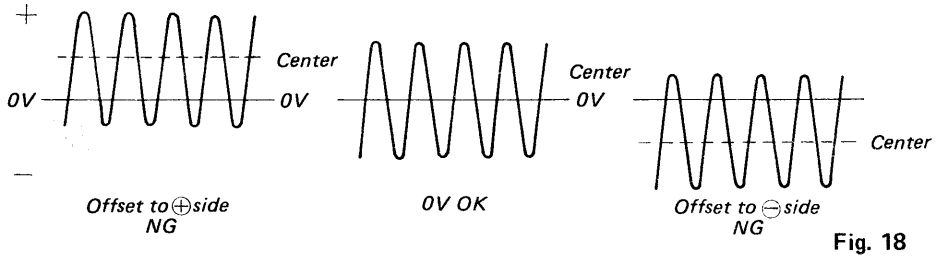

Fig. 18

7. Pickup Slant Adjustment

1. Connect oscilloscope to pins #3 and #11 of Q701 SERVO IC. (Figure 19)
2. Set test disc YEDS-7 to play mode.

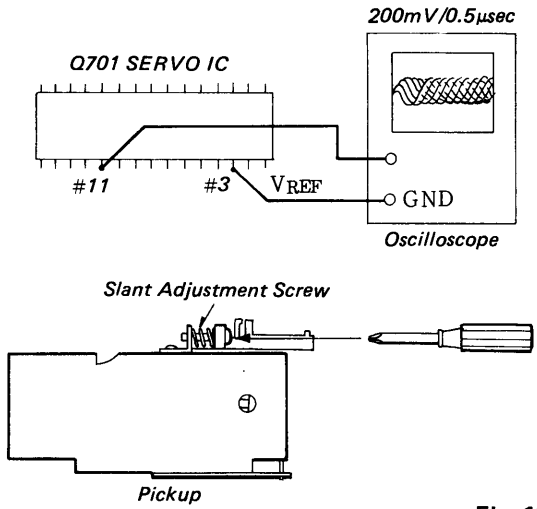

Fig. 19

3. Adjust pickup slant adjustment screw so that center part of RF signal (eye pattern) is clear.

4. When the adjustment is completed, apply screw lock to the slant adjustment screw.

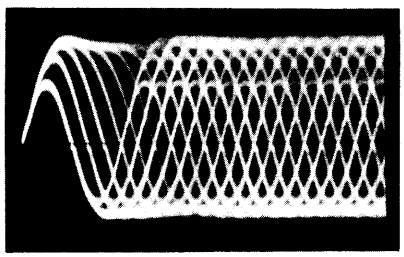

Photo 1 RF Signal (Eye Pattern)

NOTE: PICKUP DIFFRACTION GRATING ADJUSTMENT

* When replacing pickup or if any tracking problem occurs, make sure the tracking waveform by means of following procedure. If the voltage waveform difference between track No. 12 and No. 1 of test disc is 10% or more, proceed the pickup diffraction grating adjustment.

1. Connect oscilloscope to pin #3 and #22 of Q701 as illustrated.
2. Search No. 1 piece and No. 12 piece of test disc YEDS-7.
3. Hold the warm gear of pickup drive motor with your hand to stop the revolution of the motor.
4. Measure the tracking waveform with the UP KEY pressing. (Measure No. 1 piece and No. 12 piece respectively by above mentioned method.

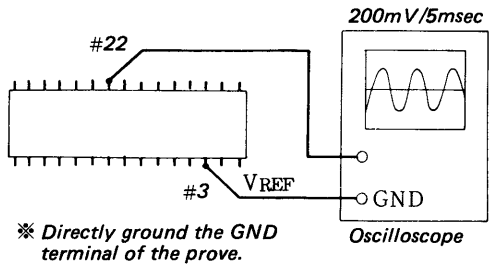

ADJUSTMENT

1. Search No. 12 piece of test disc and proceed the steps 2 ~ 4 described above.
2. Perform steps 3, 4 and insert eccentric adjustment driver into grating adjustment hole and turn the driver carefully (very slowly) until tracking error waveform (TE level) reaches max. amplitude.

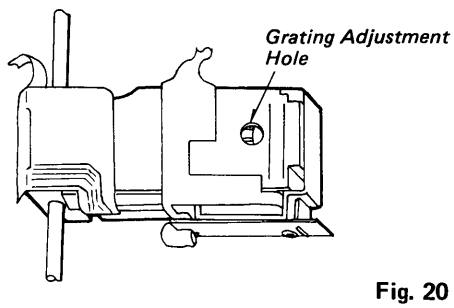

Fig. 20

Note: Adjust the angle with the eccentric adjustment screw driver by observing the turning angle of the protruding plate of the screw driver's knob.
The turning angle should be more or less same as the angle of the edge of razor's blade.
The part No. of the eccentric adjustment screw driver is 22990837.

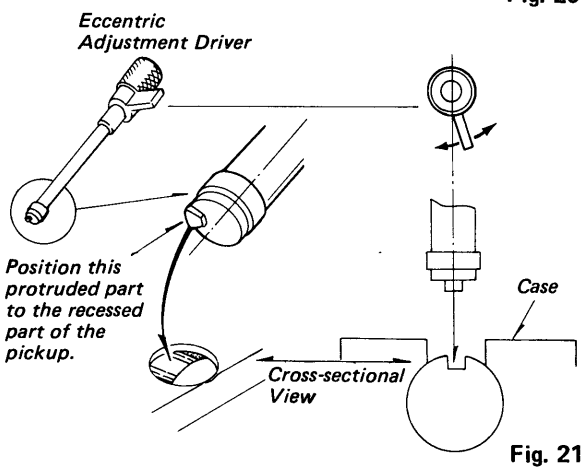

Fig. 21

8. Focus Error Blance Adjustment

1. Connect oscilloscope to pins #3 and #11 of Q701 SERVO IC.

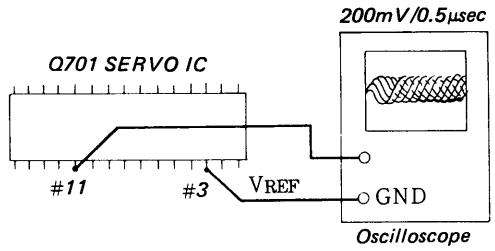

Fig. 22

2. Adjust R729 focus error balance VR so that RF signal (eye pattern) is clear with test disc YEDS-7 played back.
   Refer to photo of pickup slant adjustment for waveform.

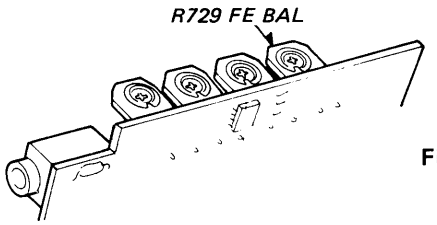

Fig. 23

9. APC VR (Laser Power Fine Adjustment)

1. Connect oscilloscope to pins #3 and #11 of Q701 SERVO IC.
2. Play back test disc YEDS-7.

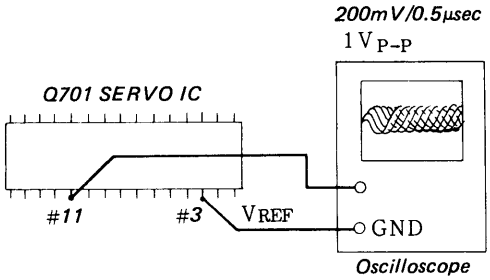

3. Adjust R109 APC VR so that RF signal obtains 1Vp-p. (Photo 1)

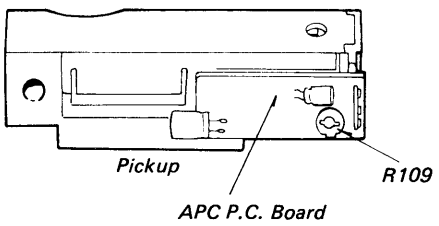

Fig. 24

10. Tracking Error Balance Fine Adjustment

1. Proceed adjustment of item 6 Tracking error balance adjustment again.

11. The Other Adjustment

(Tracking and focus error offset adjustment)
This adjustment is proceeded mainly when Q701 SERVO IC is replaced. This adjustment is not needed in pickup replacement. Check after adjustment of item 1 is completed.

* Check after pickup is assembled completely.

1. Connect oscilloscope to Q701 SERVO IC. (Figure 25)
   For tracking error offset adjustment and check: pin #22
   For focus error offset adjustment and check: pin #28
2. Connect filter circuit shown in Figure 42 across Q701 and oscilloscope.
3. Adjust each R726, R728 so that 0V ±10mV is obtained with power of unit set to ON.
   But unit in stop mode.

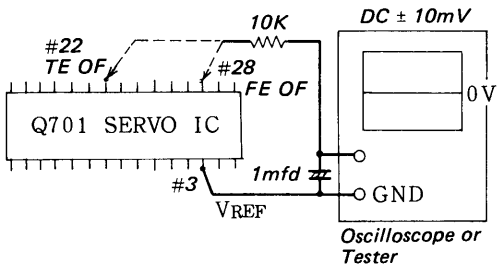

Fig. 25

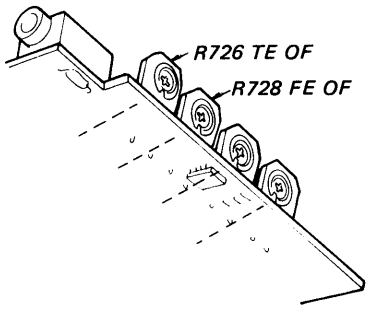

Fig. 26

ADJUSTMENT XR-V12/V15(V12A/V15A), XR-30/35(30A/35A)

1. Adjustment Locations

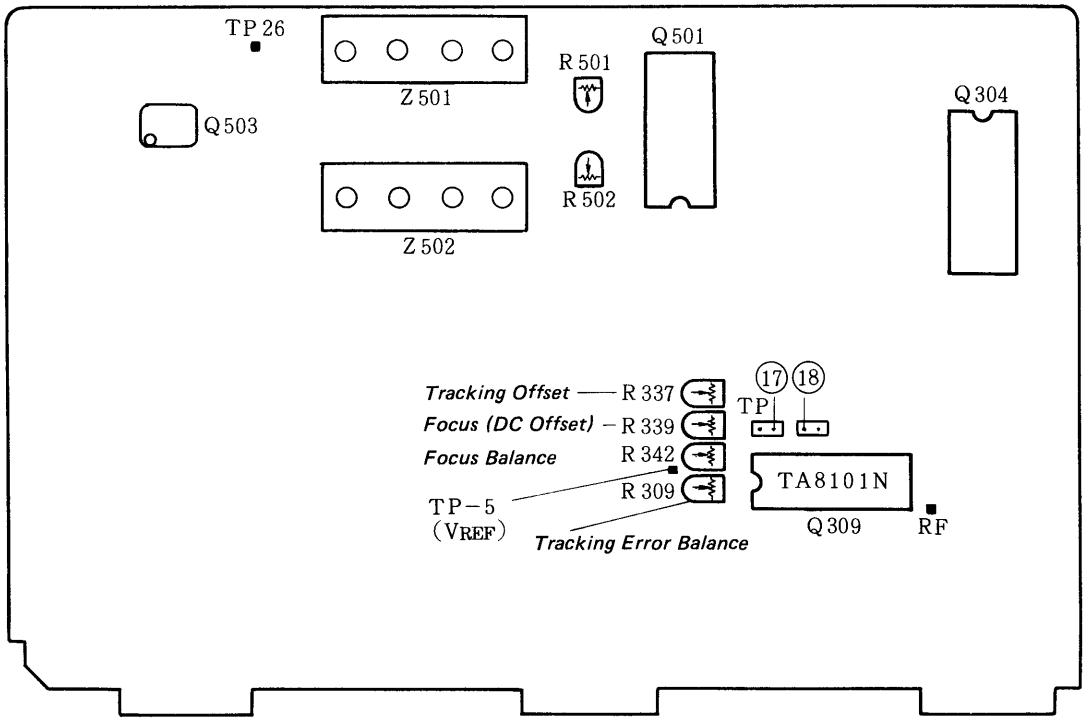

Fig. 1 Main PC Board

2. Adjustment Procedure

2-1 Adjustment of Focus DC Offset (in replacement of TA88101N, VR R339)

(1) Turn the player's power ON to put the player into the stop mode.
(2) Connect an oscilloscope or a tester between TP-17 (FE) and TP-5 (Vref). (DC range 5 mV/div.)
(3) Adjust R339 (100K ohms) so that the DC offset is 0V ± 10mV.

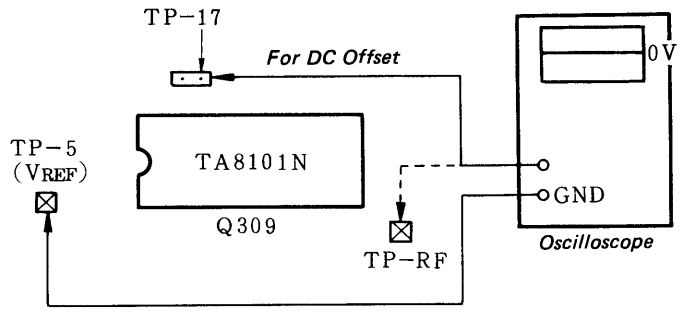

Fig. 2

2-2 Adjustment of Focus Balance

(1) Connect an oscilloscope between TP-RF and TP-5 (Vref). (AC range 0.2V/0.5μsec div.)
(2) Play back the test disc YEDS-7.
(3) Adjust R342 (20K ohms) so that the 3T component of the RF signal is maximized.

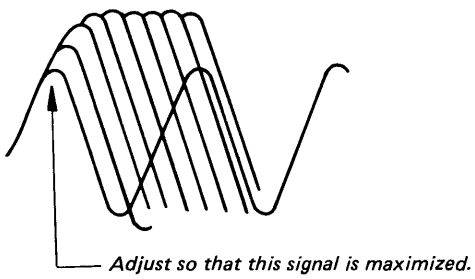

Fig. 3

2-3 Adjustment of Tracking Offset (in replacement of TA8101N, VR R337)

(1) Turn the player's power ON to put the player into the stop mode.
(2) Connect an oscilloscope or a tester between TP-18 (TE signal) and TP-5 (Vref). (DC range 5 mV/div.)
(3) Adjust R339 (100K ohms) so that the DC offset is 0V ± 10mV.

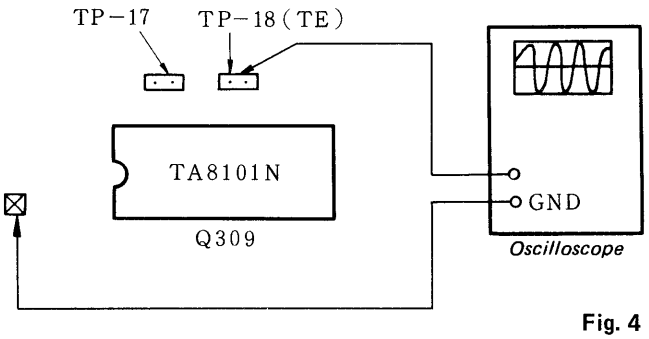

Fig. 4

2-4 Adjustment of Tracking Error Balance

(1) Connect an oscilloscope between TP-18 (TE signal) and TP-5 (Vref). (DC range 0.5V/5 msec div.)
(2) Load the test disc YEDS-7 and perform the search operation by the UP/DOWN key.
(3) Adjust R309 (100K ohms) so that the DC offset of the tracking error signal which appears during the search operation is 0V.

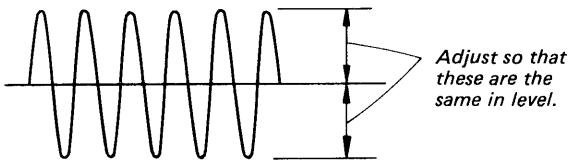

Fig. 5

2-5 Adjustment of Analog Output Offset

In replacement of the pickup, this adjustment is not needed.

(1) Turn the player's power ON.
(2) Connect a DC voltmeter or an oscilloscope between the pins 1/7 (Lch)/(Rch) of Q503 on the main PC board and the GND terminal of the player, and adjust the semi-fixed VR R502 (50K ohms, Lch)/R501 (50K ohms, Rch) so that the offset (DC range) is 0 ± 10mV.

3. Precautions in Replacement of Pickup

■ **Precautions in removal of pickup for repair**

1) When removing the laser pickup, short it by soldering its terminal, to protect the pickup against the damage which may occur during removal of the pickup.
2) After completion of soldering, disconnect the connector and the lead wires. Be careful not to handle the pickup terminal.
3) When installing the laser pickup, unsolder the shorting after connecting the connector and the lead wires.

■ **Precautions in replacement of laser pickup**

1) When replacing the laser pickup with a new one, unsolder the laser diode protection soldering on the PC board.
   * Use a soldering iron grounded (or a soldering iron free from leakage).
   * Cover the working table with a conductive mat grounded.
   * Before work, always be careful not to charge the body by handling the conductive mat or ground wire by both hands.

OPH-21

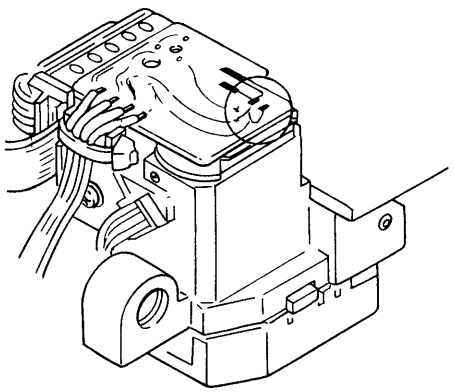

- Before disconnecting the lead wire connector, solder between patterns located as shown in the above drawing.

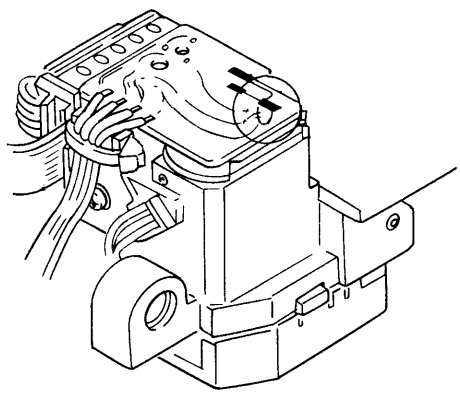

- Soldered state

OPH-23

★ In OPH, for job improvement its lead wire was changed to socket type in the course of production. So,type name of the pickup is OPH-23.
In service parts, therefore, OPH-23 is supplied with a socket lead as a kit. In maintenance of the CD player with OPH-21, this lead wire should be used.

Note: For the position of a short jumper, its illustration should be referred to.

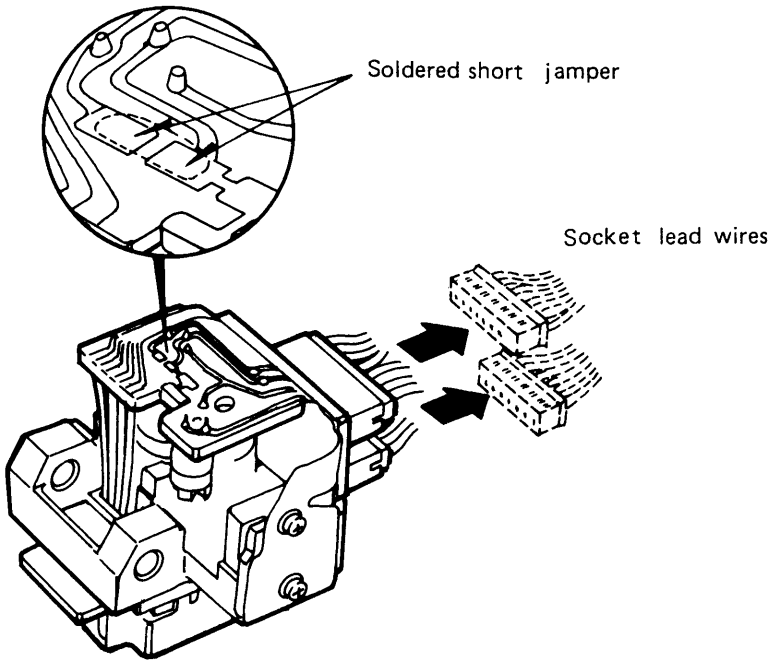

OPH-41

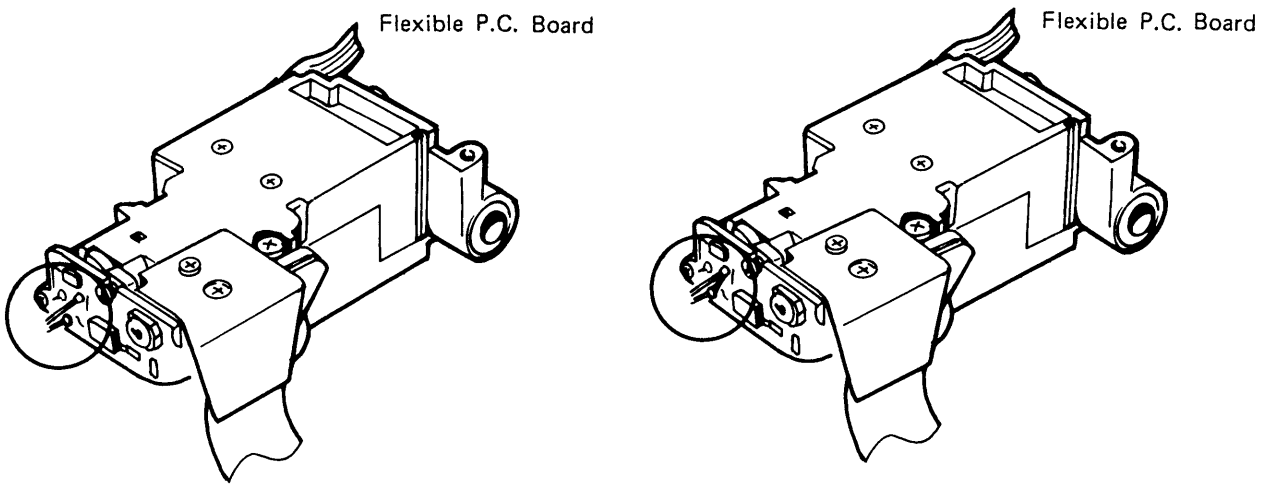

Two kinds of laser pickup and disk motor kit are provided as service parts.
Take care when replacing service parts.

(1) Parts Code for	XR-V12/V15	Pickup	22155210
	XR-30/35	Motor Kit	25792143
(2) Parts Code for	XR-V12A/V15A	Pickup	22155241
	XR-30A/35A	Motor Kit	25792143

IX. TROUBLESHOOTING

RULES ON USE:

Example

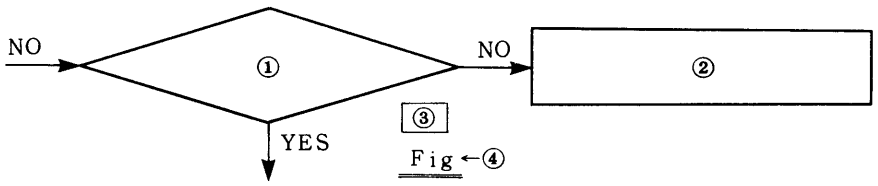

1. Compare the content of ① with the condition of the player to be repaired. If they match each other, go to YES. If not, go to NO.
2. ② in ▭ comments on how the player is defective.
3. ③ in ▭ indicates the reference voltage for the signal or voltage written in ① (in◇). GND or Vref is written in ③. For example, when Vref is written, connect the GND pin of the oscilloscope to the pin Vref (pin③of TA8101N) to check the signal in 1. In addition, the Vref voltage is 2.1 +/—0.15V against the reference of the GND voltage.
4. ④ indicates the Fig. No. (page 32 to 37) in which the waveform of the signal in ① is shown.
5. The items to be checked include the circuit, defective soldering, disconnected pattern, etc.

XR-P9 TROUBLESHOOTING FLOWCHART

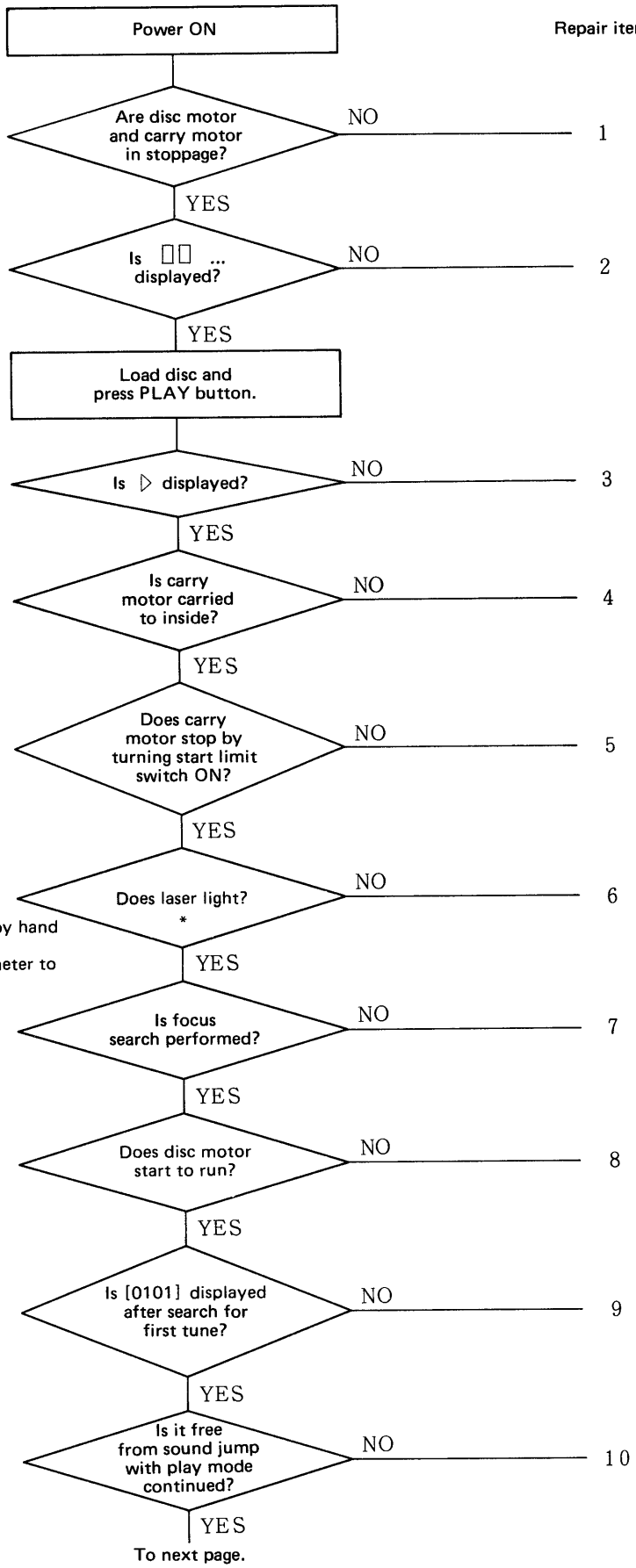

* Push close limit switch by hand and push play switch. Apply the laser power meter to pickup lens.

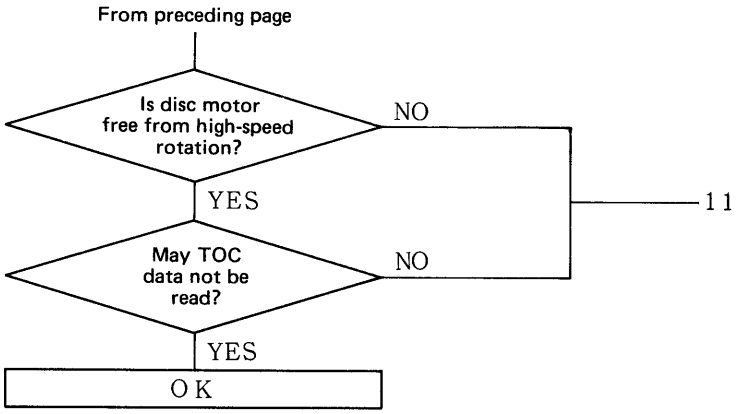
From preceding page
Is disc motor free from high-speed rotation?
NO
YES
11
May TOC data not be read?
NO
YES
OK

[Repair Item 1] At power ON, the disc motor and carry motor run.

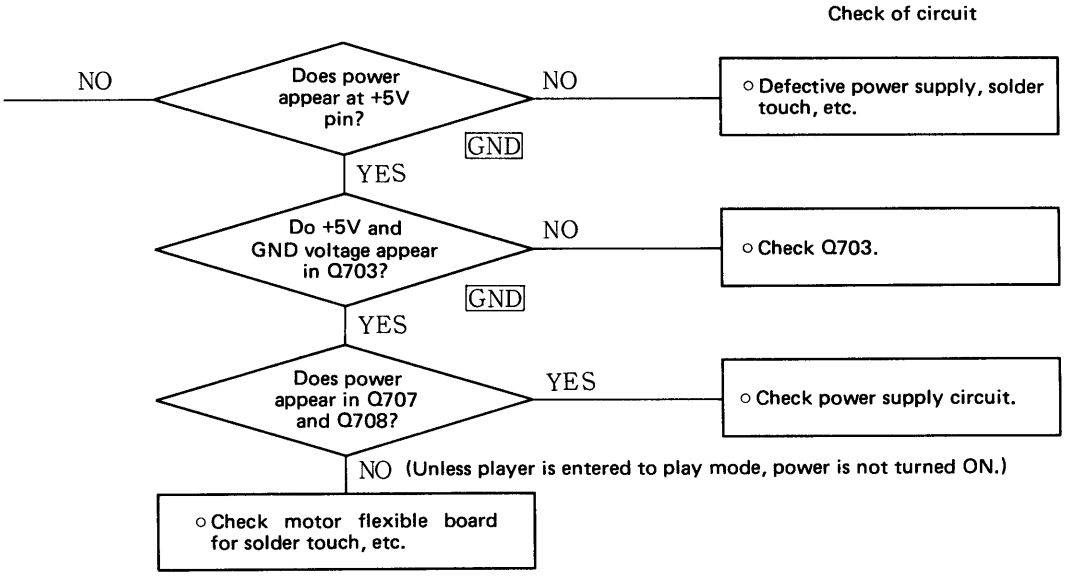

[Repair Item 2] At power ON, 00 ---- is not displayed.

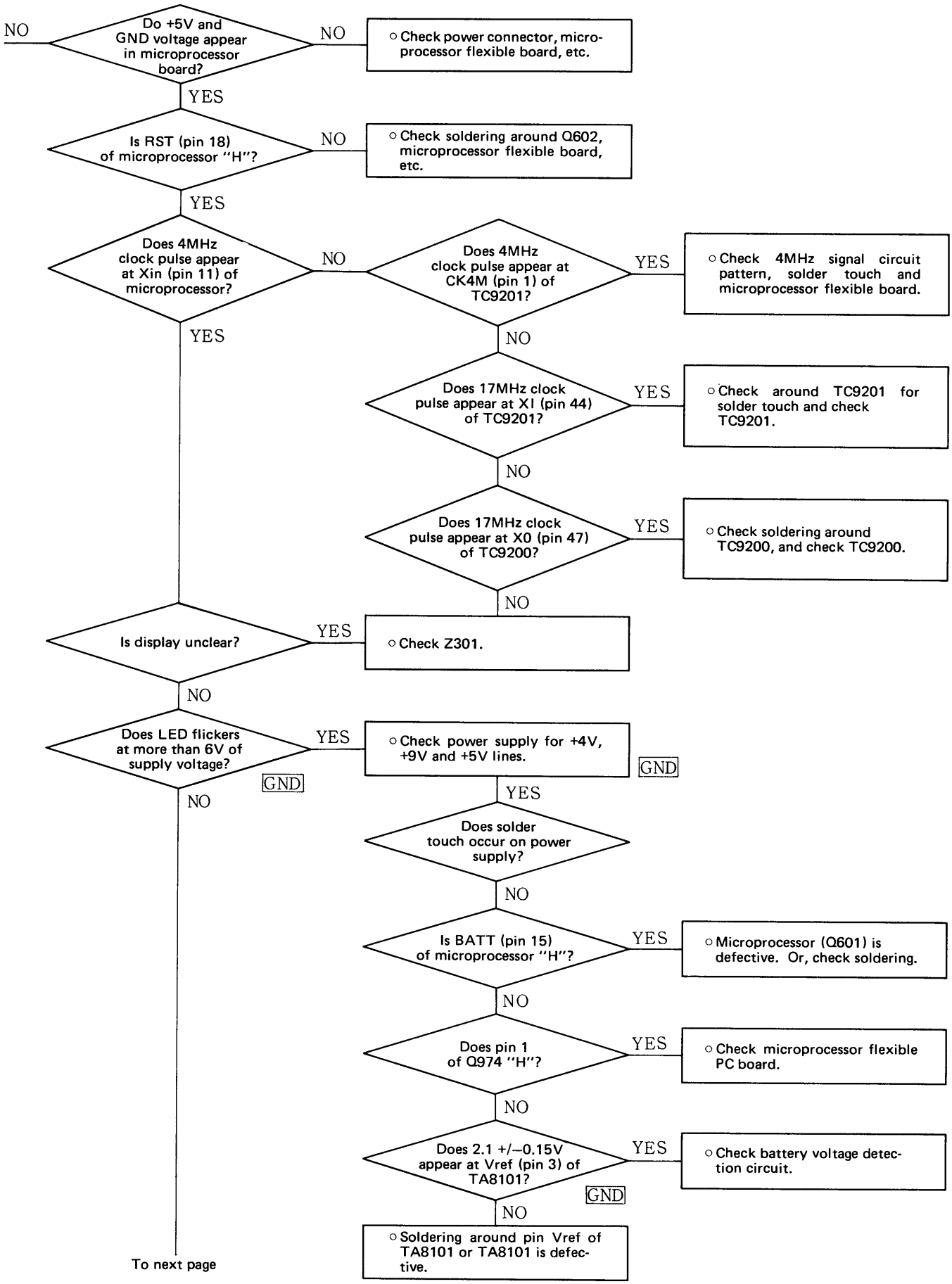

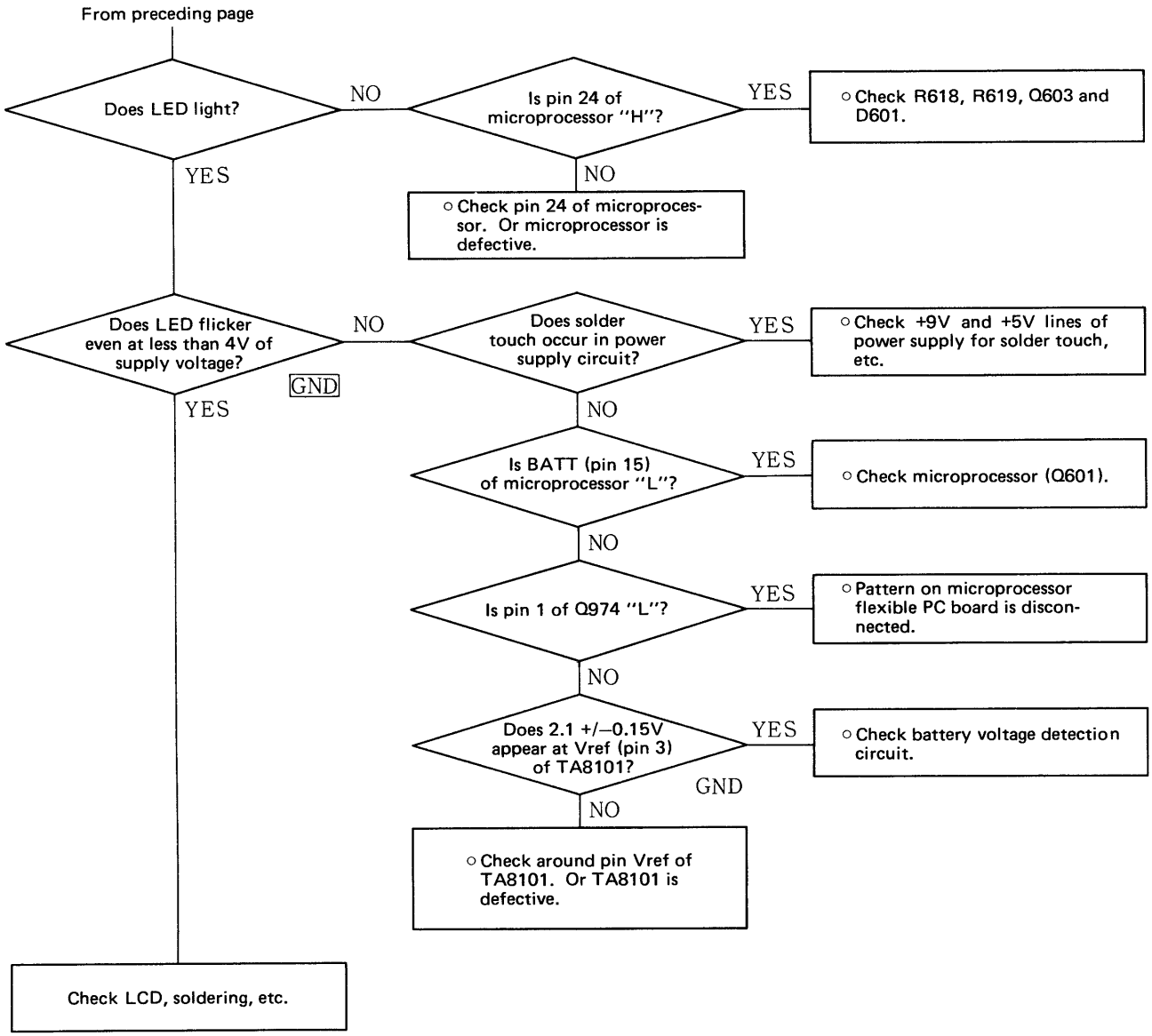
From preceding page
Does LED light?
NO
Is pin 24 of microprocessor "H"?
YES
○ Check R618, R619, Q603 and D601.
YES
NO
○ Check pin 24 of microprocessor. Or microprocessor is defective.
Does LED flicker even at less than 4V of supply voltage?
NO
Does solder touch occur in power supply circuit?
YES
○ Check +9V and +5V lines of power supply for solder touch, etc.
GND
YES
NO
Is BATT (pin 15) of microprocessor "L"?
YES
○ Check microprocessor (Q601).
NO
Is pin 1 of Q974 "L"?
YES
○ Pattern on microprocessor flexible PC board is disconnected.
NO
Does 2.1 +/–0.15V appear at Vref (pin 3) of TA8101?
YES
○ Check battery voltage detection circuit.
GND
NO
○ Check around pin Vref of TA8101. Or TA8101 is defective.
Check LCD, soldering, etc.

[Repair Item 3] Even when the PLAY button is pressed, ▷ 00 is not displayed.

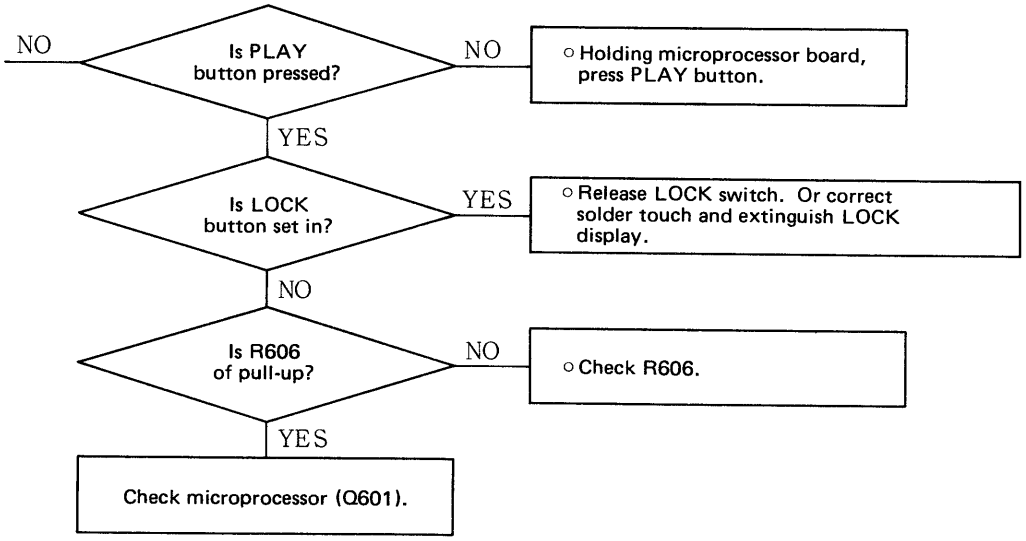

[Repair Item 4] The carry motor does not carry the pickup to inside.

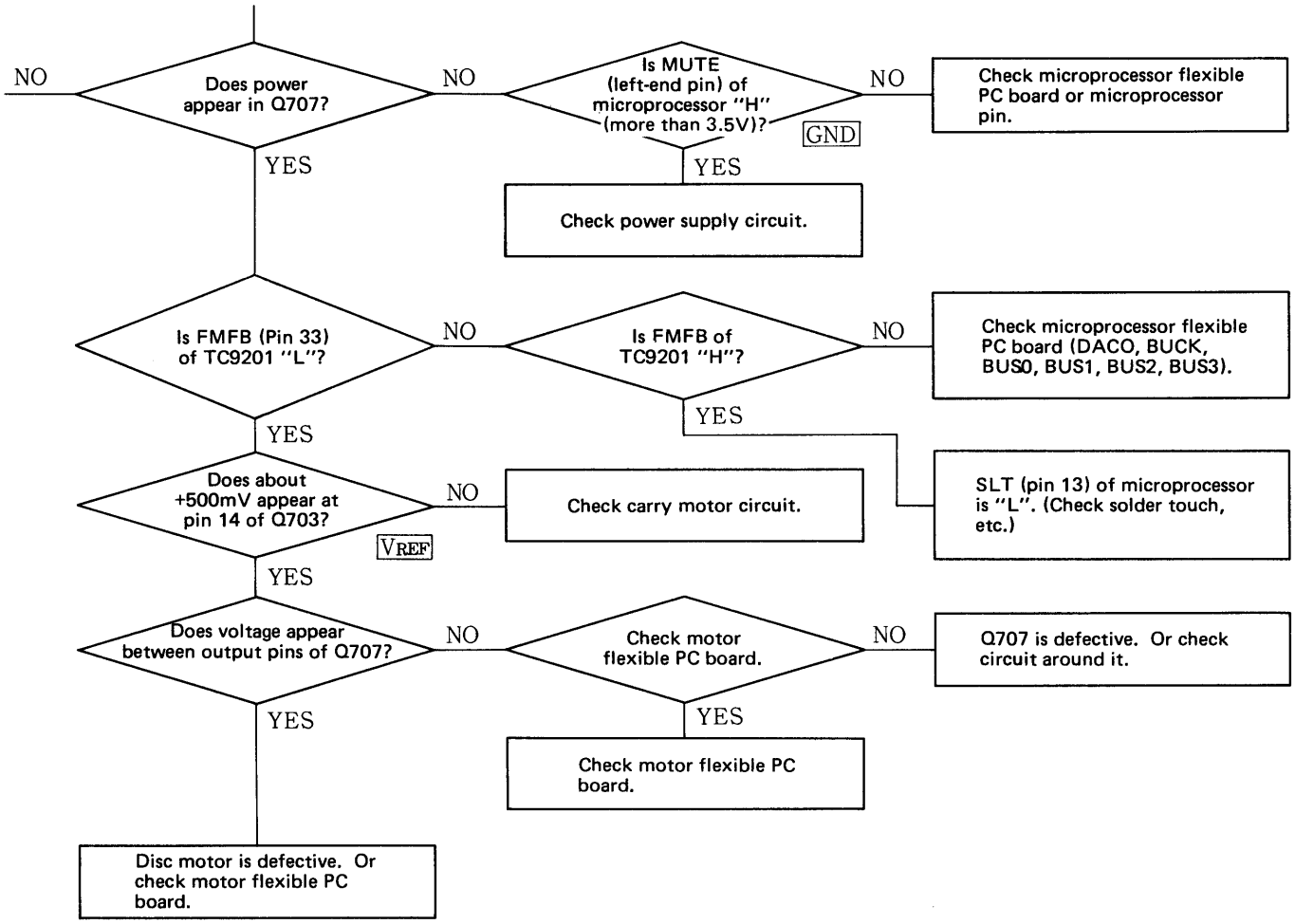

[Repair Item 5] Although the start limit switch is pressed, the carry motor does not stop.

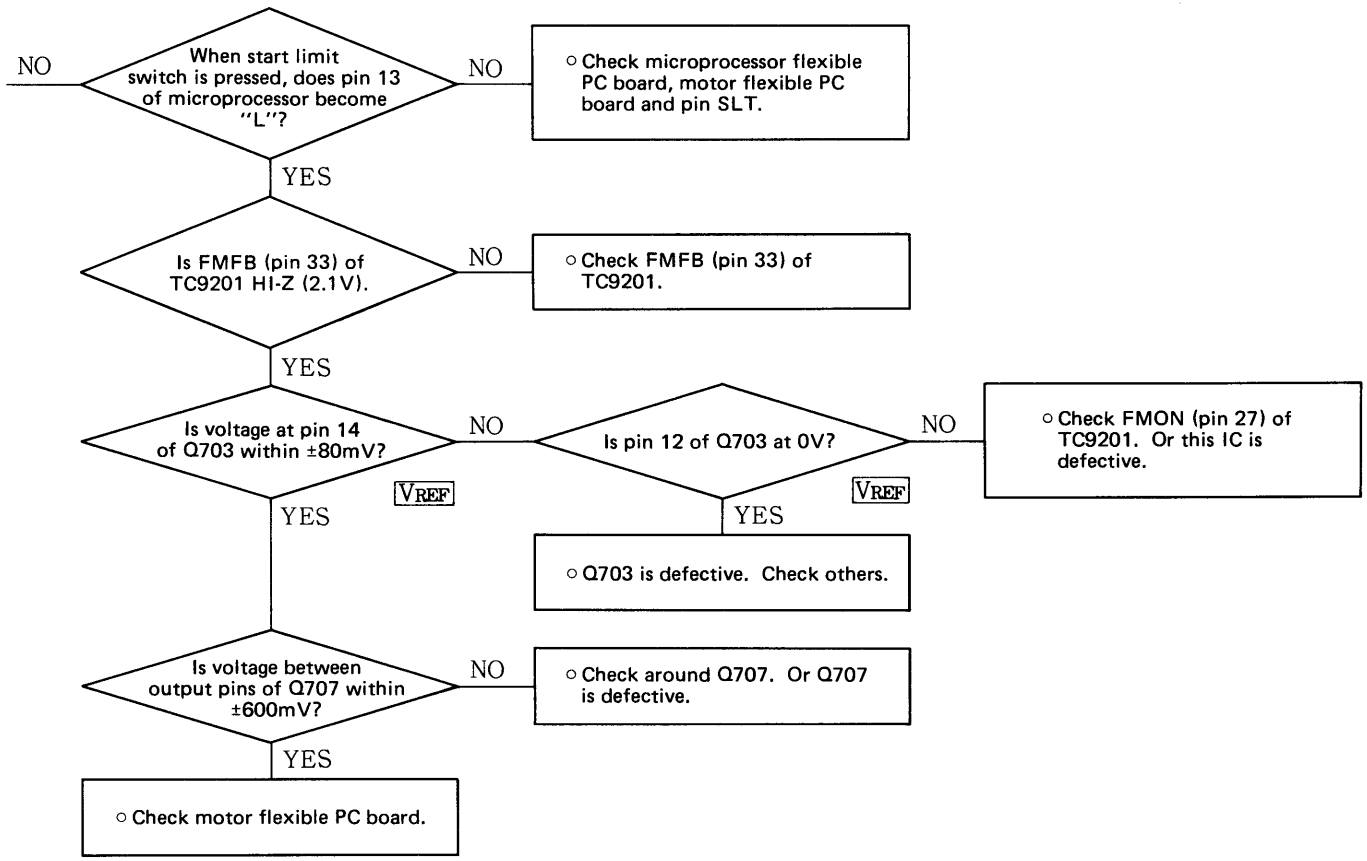

[Repair Item 6] The laser does not light.

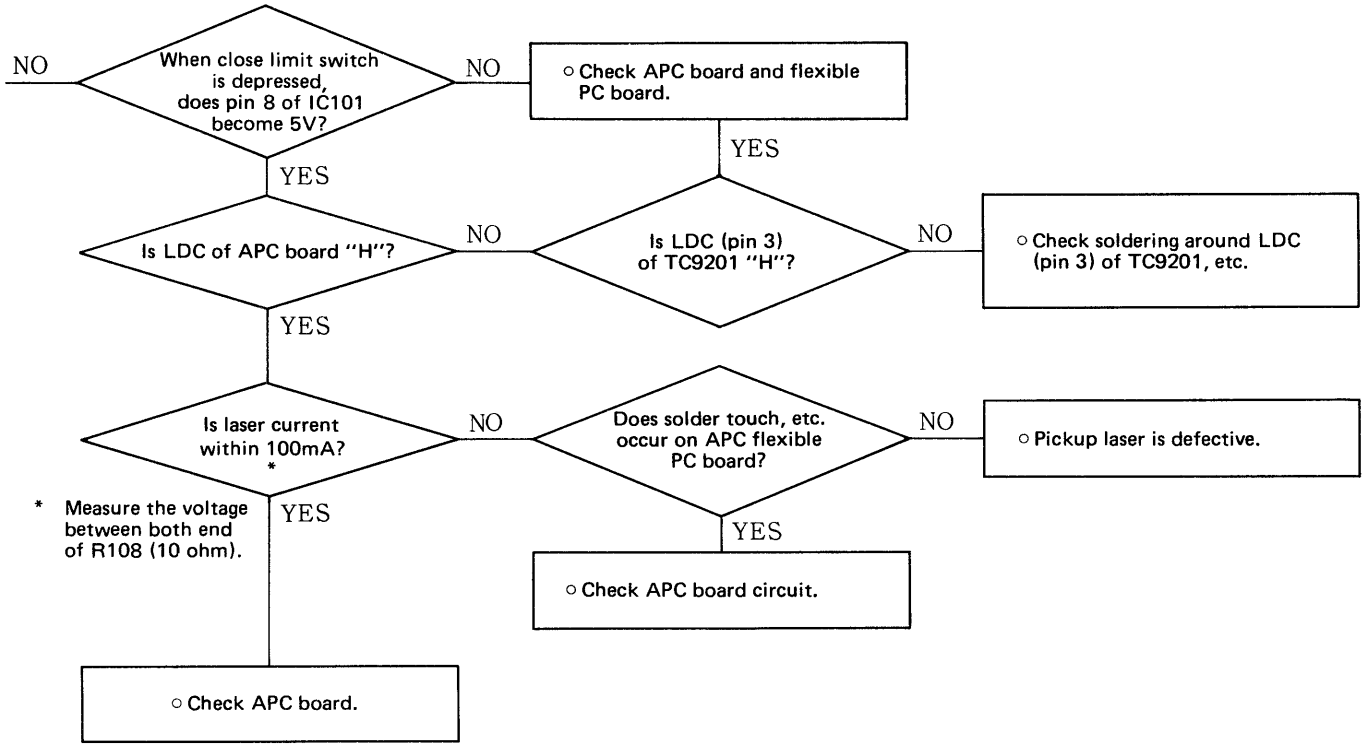

[Repair Item 7] Although the LD lights, the focus search is not made.

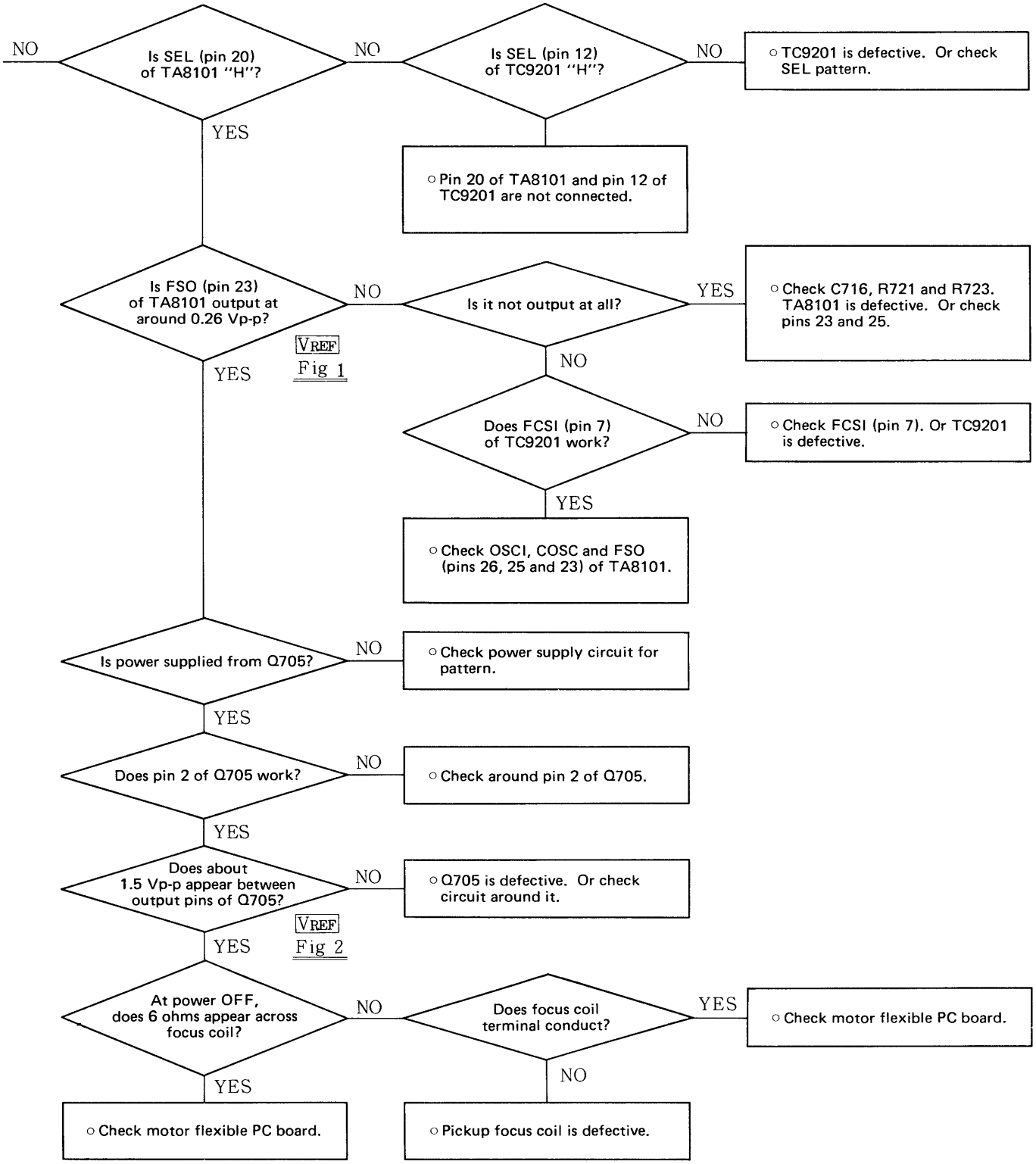

[Repair Item 8] The beam spot is not focused on.

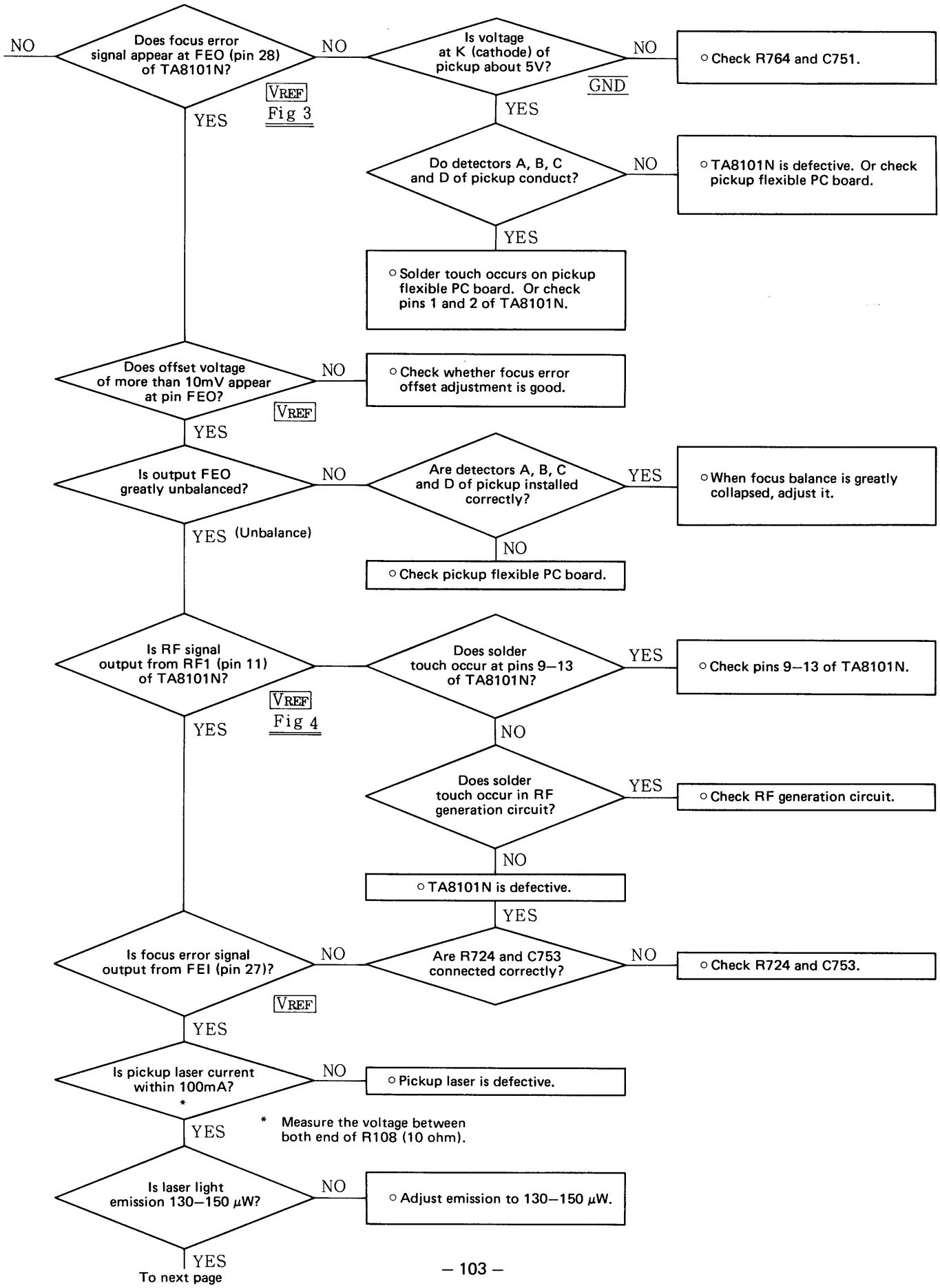

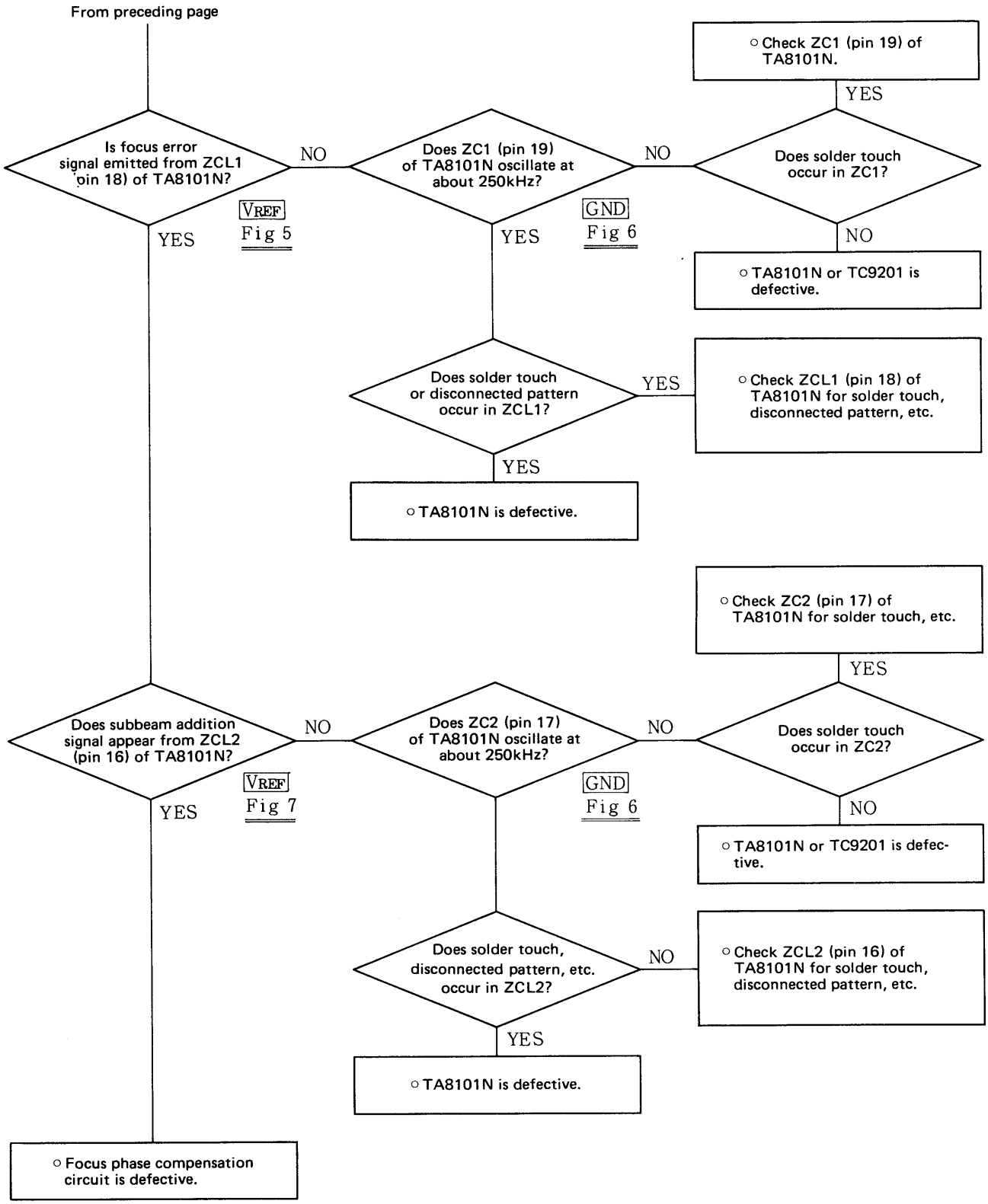
From preceding page
Is focus error signal emitted from ZCL1 (pin 18) of TA8101N?
NO
YES
VREF
Fig 5
Does ZC1 (pin 19) of TA8101N oscillate at about 250kHz?
NO
YES
GND
Fig 6
Does solder touch occur in ZC1?
YES
NO
○ Check ZC1 (pin 19) of TA8101N.
○ TA8101N or TC9201 is defective.
Does solder touch or disconnected pattern occur in ZCL1?
YES
YES
○ Check ZCL1 (pin 18) of TA8101N for solder touch, disconnected pattern, etc.
○ TA8101N is defective.
Does subbeam addition signal appear from ZCL2 (pin 16) of TA8101N?
NO
YES
VREF
Fig 7
Does ZC2 (pin 17) of TA8101N oscillate at about 250kHz?
NO
GND
Fig 6
Does solder touch occur in ZC2?
YES
NO
○ Check ZC2 (pin 17) of TA8101N for solder touch, etc.
○ TA8101N or TC9201 is defective.
Does solder touch, disconnected pattern, etc. occur in ZCL2?
NO
YES
○ Check ZCL2 (pin 16) of TA8101N for solder touch, disconnected pattern, etc.
○ TA8101N is defective.
○ Focus phase compensation circuit is defective.

[Repair Item 9] Although the beam spot is focused on, the first tune is not searched for.

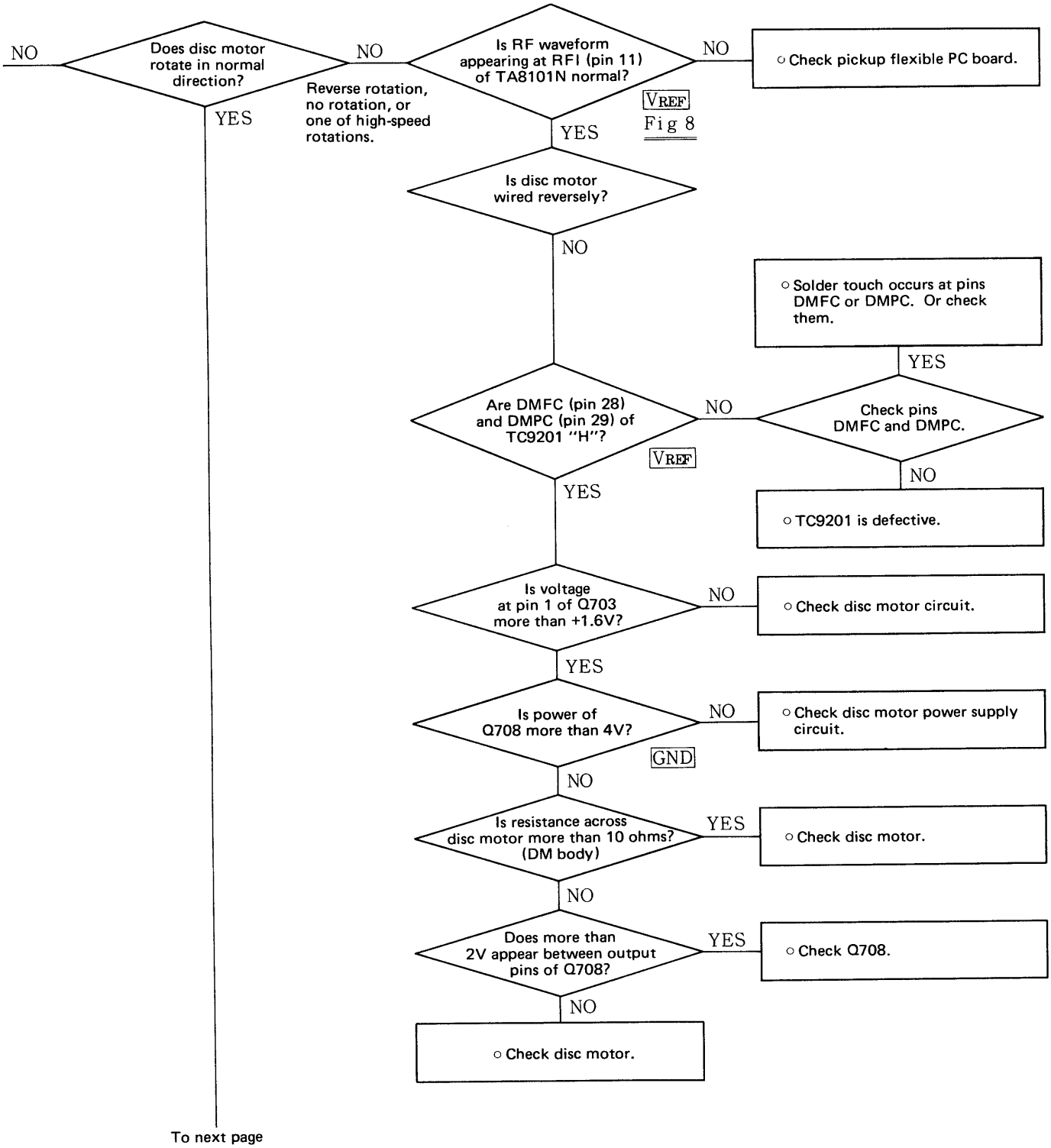

From preceding page

Does EFM signal appear at EFMI (pin 6) of TC9201?

NO (High-speed rotation)

GND

Does EFM signal appear at EFMO (pin 15) of TA8101N?

YES

○ Check R710 and R709.

GND

YES (Disc motor normal rotation)

Fig 9

NO

Do pins 9–13 of TA8101N conduct?

YES

○ Check pins 9–13 of TA8101N for solder touch, etc.

NO

Does solder touch occur in RF generation circuit?

YES

○ Check RF generation circuit.

NO

○ TA8101N is defective.

Is first tune searched for?

YES

Do pins 36–39 and 47–52 of TC9201 conduct?

YES

○ Check WDCK, COPS, SPDA, SCDA, DOUT, PLCK, PPCK, SOS1, SUBQ and SBOK in TC9201 and TC9200.

NO

NO

○ TC9200 or TC9201 is defective.

Is output of pin TSO of TA8101N less than ±10mV at stop mode?

NO

○ Readjust tracking error offset.

VREF

YES

On search mode is DC level symmetry of pin 22 (TSO) of TA8101N good?

NO

○ Readjust tracking error balance.

VREF

Fig 10

YES

Is grating adjustment good?

NO

○ Readjust it.

VREF

YES

Is tracking error signal output from TEOF (pin 26) of TC9201?

NO

○ Solder touch occurs at pin 26 of TC9201. Or TC9201 is defective.

YES

Is offset voltage between pins 7 and 8 of Q703 within ±10mV?

NO

○ Q703 is defective.

VREF

To next page

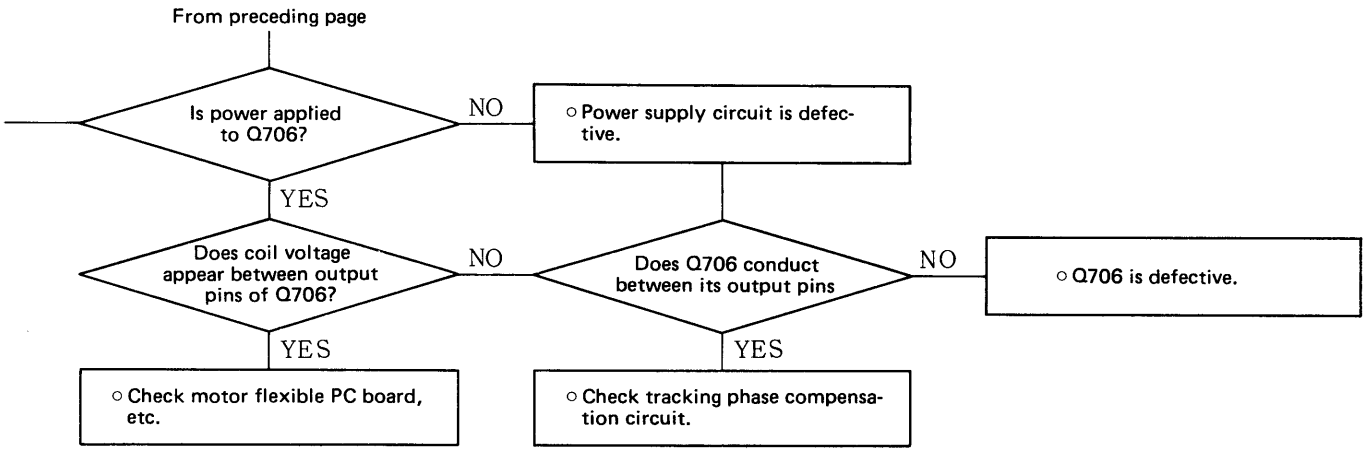
From preceding page
Is power applied to Q706?
NO
○ Power supply circuit is defective.
YES
Does coil voltage appear between output pins of Q706?
NO
Does Q706 conduct between its output pins
NO
○ Q706 is defective.
YES
YES
○ Check motor flexible PC board, etc.
○ Check tracking phase compensation circuit.

[Repair Item 10] Although the disc is played, sound jump occurs.

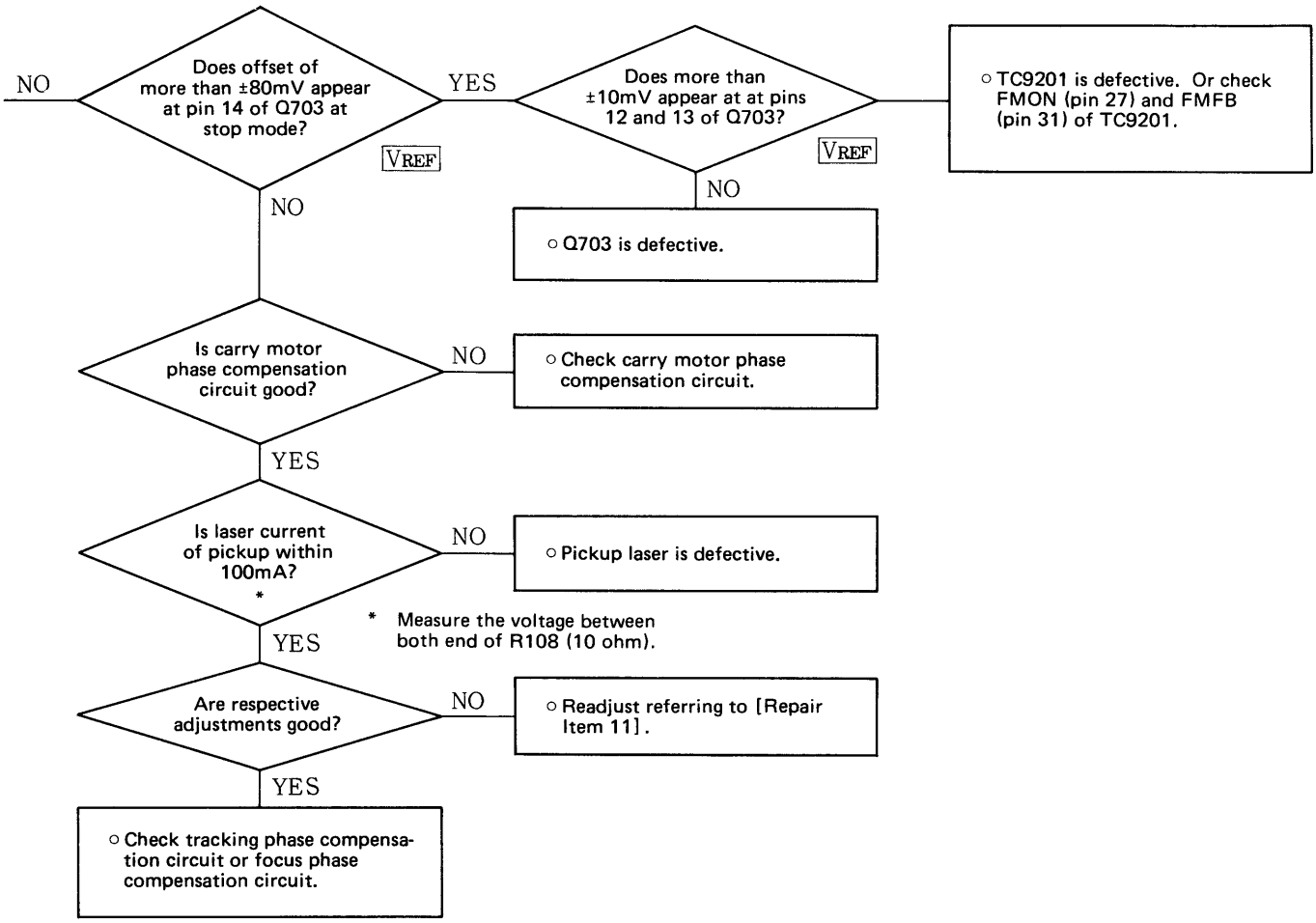

[Repair Item 11]

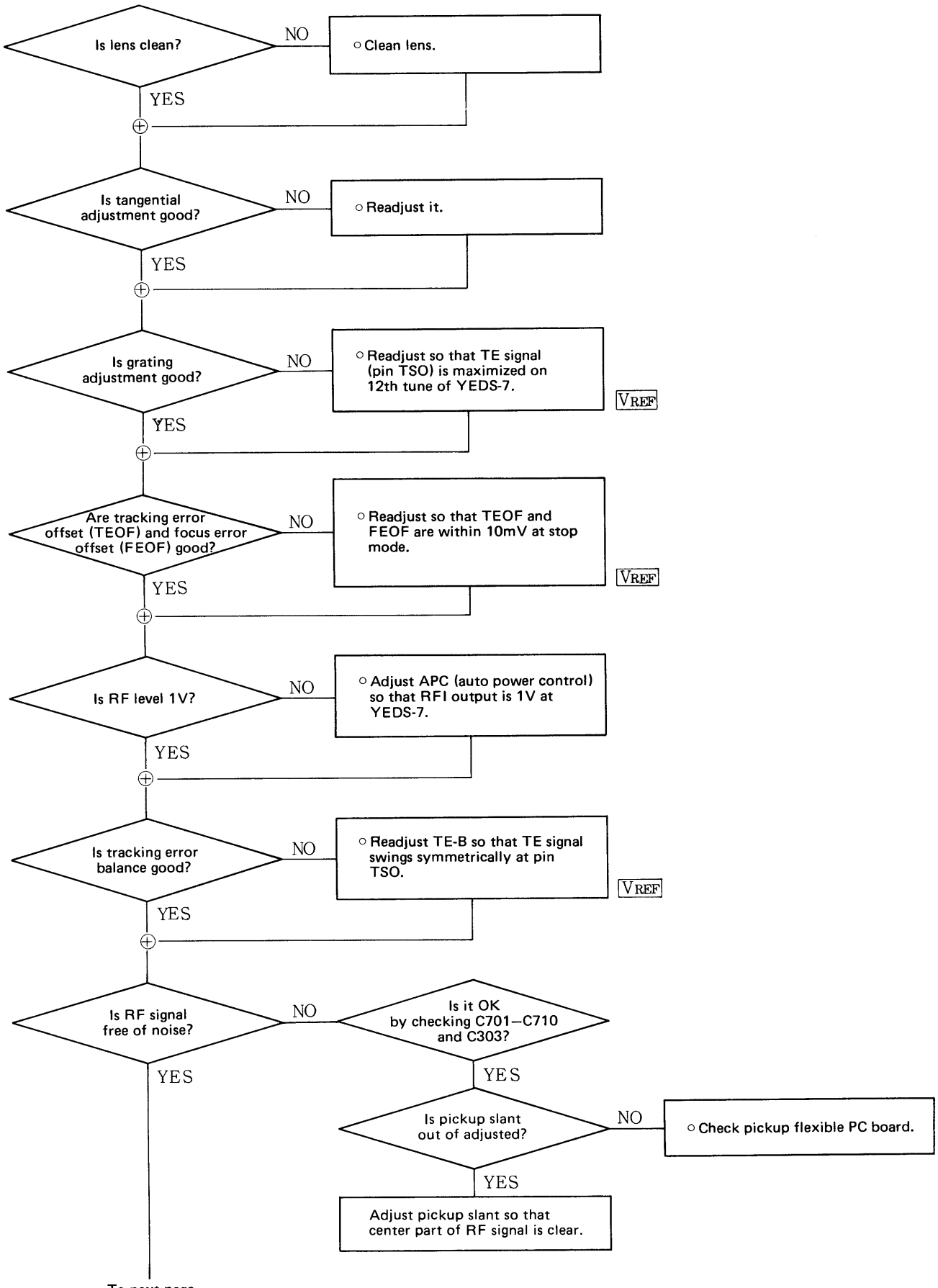

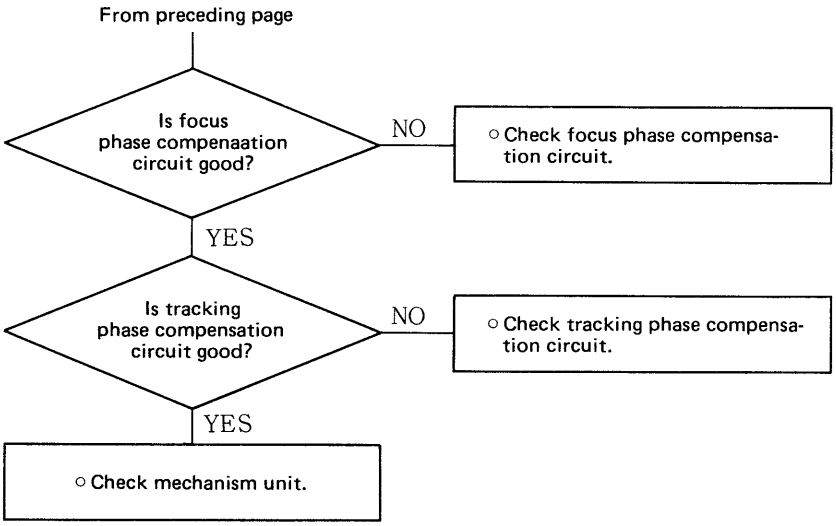
From preceding page
Is focus phase compenaation circuit good?
NO
○ Check focus phase compensation circuit.
YES
Is tracking phase compensation circuit good?
NO
○ Check tracking phase compensation circuit.
YES
○ Check mechanism unit.

Easy check table for 2012 type chip resistor constant designation

A chip resistor, when resistance is 10 ohms or less, is represented by a numerical value, and when more than 10 ohms, is represented by a symbol and a number as shown below.

Example: 1. A 2 100Ω

2. M 6 3.0MΩ

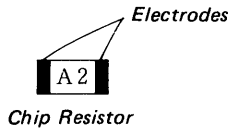

Chip Resistor

Symbol	1	2
A		100

Symbol	1	2	3	4	5	6
A	10	100	1.0K	10K	100K	1.0M
B	11	110	1.1K	11K	110K	1.1M
C	12	120	1.2K	12K	120K	1.2M
D	13	130	1.3K	13K	130K	1.3M
E	15	150	1.5K	15K	150K	1.5M
F	16	160	1.6K	16K	160K	1.6M
G	18	180	1.8K	18K	180K	1.8M
H	20	200	2.0K	20K	200K	2.0M
J	22	220	2.2K	22K	220K	2.2M
K	24	240	2.4K	24K	240K	2.4M
L	27	270	2.7K	27K	270K	2.7M
M	30	300	3.0K	30K	300K	3.0M
N	33	330	3.3K	33K	330K	3.3M
P	36	360	3.6K	36K	360K	3.6M
Q	39	390	3.9K	39K	390K	3.9M
R	43	430	4.3K	43K	430K	–
S	47	470	4.7K	47K	470K	–
T	51	510	5.1K	51K	510K	–
U	56	560	5.6K	56K	560K	–
V	62	620	6.2K	62K	620K	–
W	68	680	6.8K	68K	680K	–
X	75	750	7.5K	75K	750K	–
Y	82	820	8.2K	82K	820K	–
Z	91	910	9.1K	91K	910K	–

* No designation is given for 10 ohms or less and 3.9 Mohms or more.

X. WAVEFORMS (XR-P9)

Fig. 1 Waveform at Pin FSO (Pin 23 of TA8101) in Focus Search

Waveform [VREF]

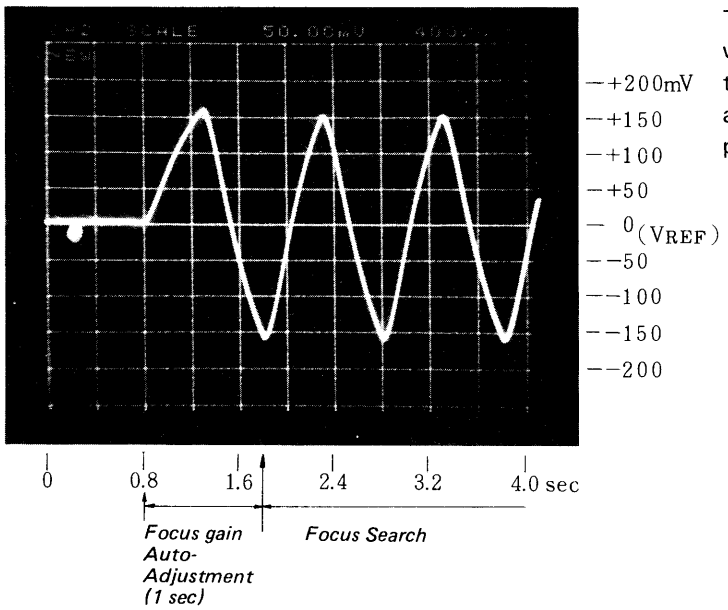

The waveform in Fig. 1 appears at pin FSO in focus search when the PLAY button is pressed with no disc. Of this triangular wave, the frequency is about 1 Hz and the voltage is 250–330 mVp-p. The first one cycle refer to the period for auto-adjustment of focus gain.

Fig. 2 Output Waveform of Q705 (Focus Actuator Coil Drive IC) in Focus Search

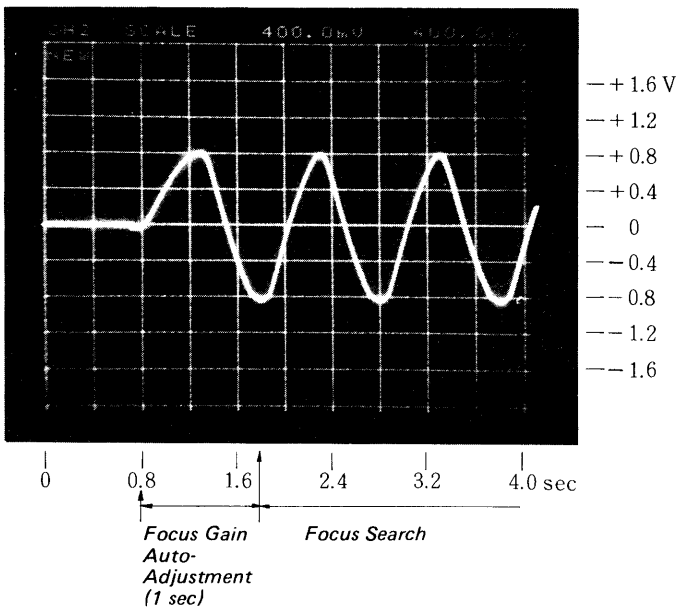

The waveform in Fig. 2 appears from Q705 in focus search when the PLAY button is pressed with no disc.
Q705 is a BTL amp. Thus, when the GND pin and hot pin of the oscilloscope are connected respectively to pins 9 and 16 of Q705, the drive waveform of the focus actuator coil can been seen directly.
The waveform in Fig. 2 is the output signal when the waveform in Fig. 1 is input to the driver IC (Q705). Therefore, the waveform in Fig. 2 is identical to that in Fig. 1 in respect to the time axis.

Fig. 3 Waveform at Pin FEO (Pin 28 of TA8101) in Focus Gain Auto-Adjustment Waveform V_{REF}

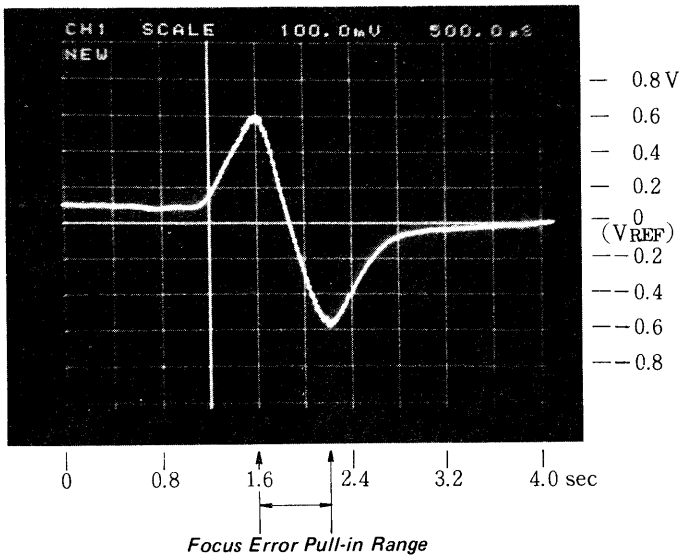

The waveform in Fig. 3 appears at pin FEO (pin 28 of TA8101) in focus gain auto-adjustment (see Figs. 1 and 2) when the PLAY button is pressed with a disc loaded.
TA8101 handles the signal detected by the pickup, and the focus error signal is output to pin FEO. The focus error signal appears when the spacing between the disc and the focus actuator reaches around a specified value (working distance) in focus search (also in focus gain auto-adjustment). Of this signal, the pull-in range refers to the distance between two peak points which is about 13 μm. In addition, this wave varies about ±6 dB due to irregularity of discs or pickups.

Fig. 4 Waveform at Pin RFI (Pin 11 of TA8101) in Focus Gain Auto-Adjustment Waveform V_{REF}

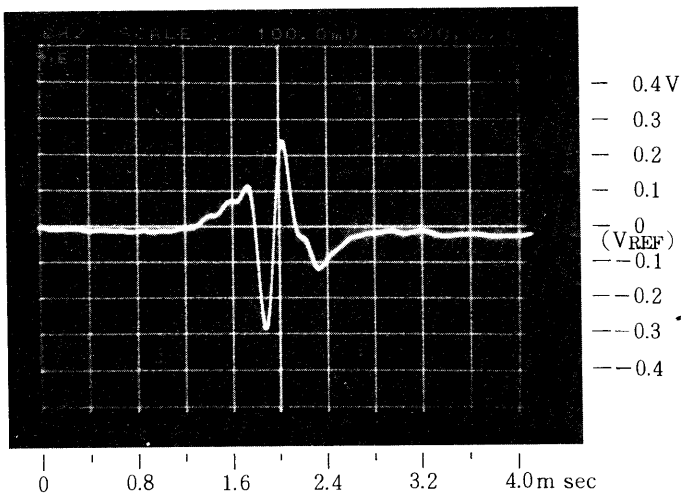

The waveform in Fig. 4 appears at pin RFI (pin 11 of TA8101) in focus gain auto-adjustment when the PLAY button is pressed with a disc loaded.
Pin RFI outputs the RF signal in play. In focus gain adjustment, the reflection light from the disc is detected by the pickup and is output in the form of such a wave. The period of time during which this wave is output concurs with that during which the focus error signal in Fig. 3 is output. Namely, when the focus actuator is within the focus pull-in range, a waveform as shown in Fig. 4 is output.

Fig. 5 Waveform at Pin ZCL1 (Pin 18 of TA8101) in Focus Gain Auto-Adjustment Waveform [VREF]

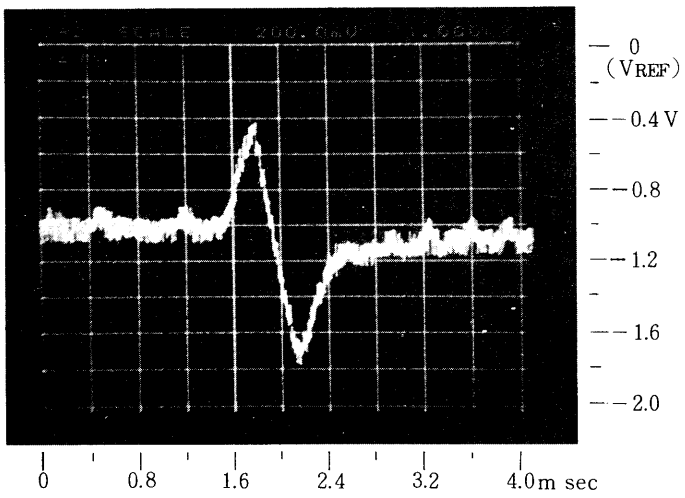

The waveform in Fig. 5 is the output of the signal resultant from processing the focus error signal of Fig. 3 by TA8101 and TC9201. However, the ZCL signal varies between voltage Vref and GND, and not with the center of voltage Vref.

Fig. 6 Waveform at Pin ZC1/ZC2 (Pin 17/19 of TA8101) in Stop Waveform [VREF]

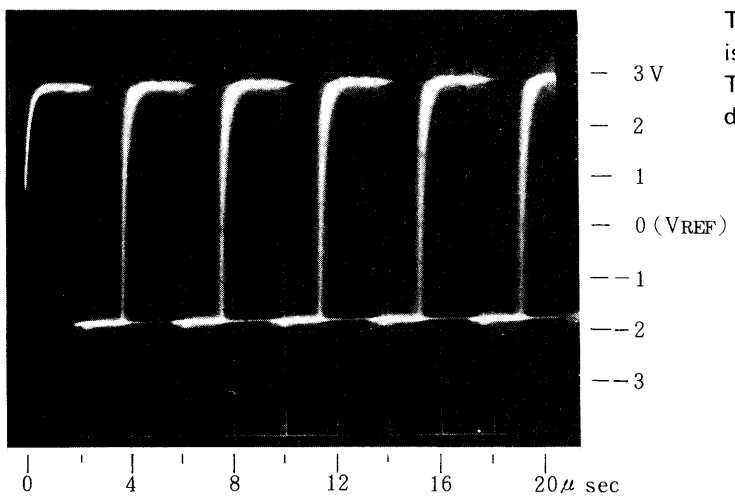

The waveform in Fig. 6, which is a signal of about 250 kHz, is used in signal processing between TC9201 and TA8101. This signal is always output with power ON. Its frequency does not change in play or search and its rise time changes.

Fig. 7 Waveform at Pin ZCL2 (Pin 16 of TA8101) in Focus Gain Auto-Adjustment **Waveform** VREF

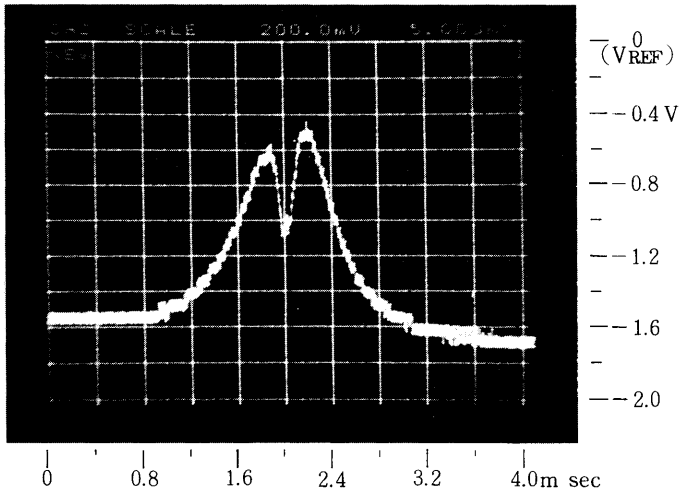

The waveform in Fig. 7 appears at pin ZCL2 (pin 16 of TA8101) in focus gain auto-adjustment when the PLAY button is pressed with a disc loaded. In focus search (also in focus gain auto-adjustment), pin ZCL2 outputs the pickup subbeam addition signal (E+F). This wave is also output when the focus actuator is around the focus pull-in range as those in Figs. 3, 4 and 5.

Fig. 8 Waveform at Pin RFI (Pin 11 of TA8101) in Play **Waveform** VREF

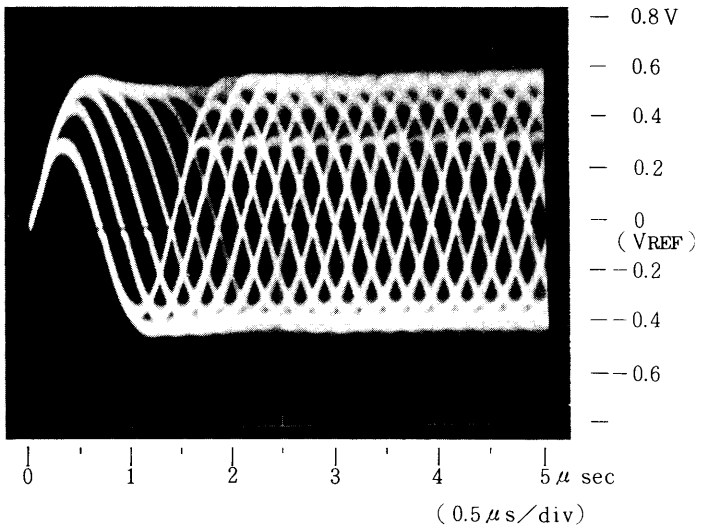

The waveform in Fig. 8 appears at pin RFI (pin 11 of TA8101) in play with a disc loaded. This signal, which is of eyepattern, is the pickup reading output of a signal recorded on the disc. In the player, adjust APCVR (R109) so that the RFI output is 1 Vp-p.

Fig. 9 Waveform at Pin EFMO (Pin 15 of TA8101) in Play **Waveform** GND

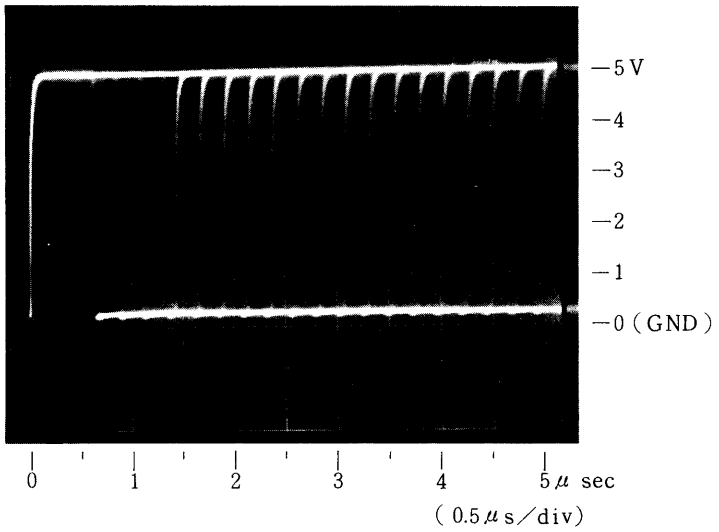

The waveform in Fig. 9 is the EFM signal which is 1 0.5V digital signal into which the RF signal of Fig. 8 is converted by TA8101. The CLV signal (DMPC, DMFC) generated in TC9201 and TC9200, etc. is produced from this signal. Thus, unless the EFM signal is input to TC9201, the disc motor does not rotate normal.

Fig. 10 Waveform at Pin TSO (Pin 22 of TA8101) when Tracking Servo is Removed **Waveform** VREF

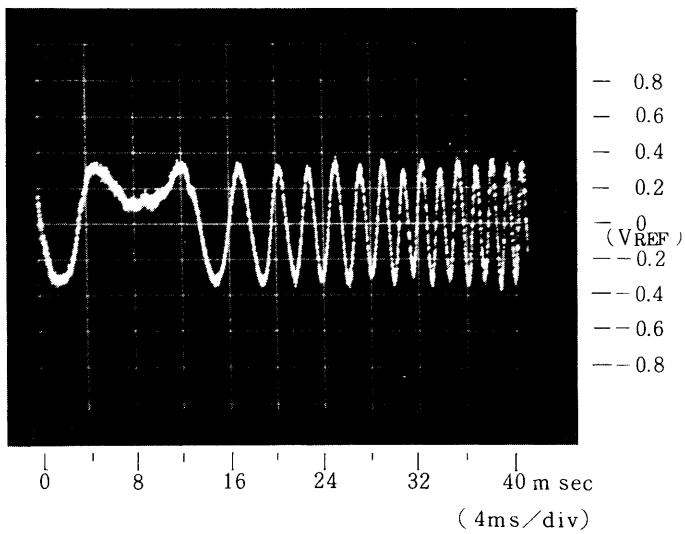

The waveform in Fig. 10 appears at pin TSO (pin 22 of TA8101), when search is applied from play mode, the carry motor is stopped compulsorily and the tracking servo is removed. To pin TSO, the tracking error signal is applied. In addition, the amplitude of this wave is automatically adjusted to within around 0.8 Vp-p ±0.1V. The grating adjustment of the pickup should be made so that the TSO signal amplitude is maximum, and the tracking error balance adjustment by R707 be made so that the symmetry of the TSO signal is optimum.

TOSHIBA CORPORATION
1-1, SHIBAURA 1-CHOME, MINATO-KU, TOKYO 105, JAPAN