ORDER NO. HAD8607690C0
A6

Service Manual

Compact Disc Player

SL-XP5

SL-XP5

COMPACT disc DIGITAL AUDIO

DIGITAL

Portable CD Player

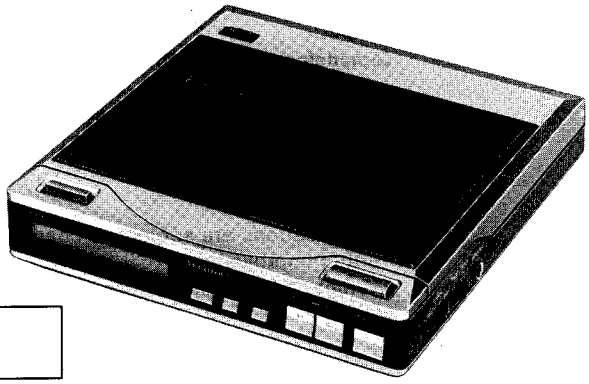

Color

(K)...Black Type
(S)...Silver Type

Color	Areas
(K) (S)	[M].....U.S.A.
(K) (S)	[MC]...Canada.
(K) (S)	[E].....Switzerland and Scandinavia.
(K) (S)	[EK]....United Kingdom.
(K) (S)	[XL]....Australia.
(K) (S)	[EG]...F.R. Germany.
(K) (S)	[EB]....Belgium.
(K) (S)	[EH]...Holland.
(K) (S)	[EF]....France.
(K) (S)	[Ei].....Italy.
(K) (S)	[XA]....Asia, Latin America, Middle Near East, Africa and Oceania.
(K) (S)	[XB]....Saudi Arabia.
(K) (S)	[PA]....East PX.
(K) (S)	[PE]....European Miliary.
(K) (S)	[PC]....European Audio Club.

SPECIFICATIONS

(* Measured by EIAJ (CP-307))

■ Audio

No. of channels: 2 (left and right, stereo)
Frequency response: 4~20,000Hz±0.5dB*
Dynamic range: More than 90dB (1kHz)*
S/N radio: More than 90dB (1kHz)*
Harmonic distortion: 0.004% (1kHz, 0dB)
Total harmonic distortion: 0.006% (1kHz, 0dB)*
Channel separation: More than 90dB (1kHz)*
Wow and flutter: Below measurable limit*
Output voltage: 1.8V (0dB)*
Output impedance: 1kΩ
Load impedance: More than 10kΩ

■ Signal Format

Sampling frequency: 44.1kHz
Correction system: Technics Super Decoding Algorithm
D-A conversion: 16-bit linear

■ Pickup

Type: FF-1 (Fine Focus· 1 beam)
Light source: Semiconductor laser
Wavelength: 780nm
Spindle system: Brushless DD motor

■ Phones

Phones jack: Mini-phones jack
Output: Max. 30mW (32Ω) (adjustable)
Impedance: 16Ω~50Ω
Plug: Mini-phones plug
High filter switch: on-off switch

■ Functions

Features: Auto play, Track random access, Program play (18-track memory). Forward skip, Backward skip, Forward search, Backward search, Repeat play, Phones jack, High filter switch, Music matrix
Digital display: Number of tracks, Total playing time (min., sec.), Track being played, Elapsed playing time, Remaining time, Programming order, Repeat indicator, Battery indicator.

■ General

Power supply: Dual DC in +6V, −6V
Power consumption:
AC adaptor; 9W
Rechargeable battery; 3.4W
Dimensions (W×H×D): 126×22.9×126mm (4-31/32"×29/32"×4-31/32") (CD player only, without protrusions)
Weight: 480g (1.1 lbs.) (CD player only)

■ AC adaptor

Power supply:
Input; For United Kingdom and Australia: AC 240V, 50Hz
For Continental Europe: AC 220V, 50Hz
For U.S.A. and Canada: AC120V, 60Hz
For others: 110/127/220/240V, 50 or 60Hz
Output; Dual DC +6V, −6V

Technics

Matsushita Services Company
50 Meadowland Parkway,
Secaucus, New Jersey 07094

Panasonic Hawaii Inc.
91-238 Kauhi St. Ewa Beach
P.O. Box 774
Honolulu, Hawaii 96808-0774

Matsushita Electric Trading Co., Ltd.
P.O. Box 288, Central Osaka Japan

Panasonic Sales Company, Division of Matsushita Electric of Puerto Rico, Inc.
Ave. 65 De Infanteria, KM 9.7
Victoria Industrial Park
Carolina, Puerto Rico 00630

Matsushita Electric of Canada Limited
5770 Ambler Drive, Mississauga,
Ontario, L4W 2T3

Panasonic Tokyo Office
Matsushita Electric Trading Co., Ltd.
6th Floor, World Trade Center Bldg.,
No. 4-1, Hamamatsu-cho 2-Chome, Minato-ku,
Tokyo 105, Japan

Dimensions (W×H×D): For United Kingdom and Australia:
51.4×75.4×58.5mm
(2-5/32"×2-15/16"×2-5/16")
For Continental Europe:
51.4×75.4×95.5mm
(2-5/32"×2-15/16"×3-3/4")
For U.S.A. and Canada:
51×75×58mm
(2"×2-15/16"×2-9/32")
For others:
56.4×95.4×61mm
(2-3/16"×3-3/4"×2-13/32")

Weight: For United Kingdom and Australia:
480g (1.1lbs.)
For Continental Europe:
390g (0.9 lbs.)
For U.S.A. and Canada:
390g (0.9 lbs.)
For others: 550g (1.2lbs.)

■ Rechargeable battery

Charging time (to full charge): Approx. 5 hours
(When unit is not in use)
(Recharging during disc play is possible too, but the recharging time is longer.)

Continuous operation time: Approx. 5 hours
(When unit is stationary)

Battery life: Approx. 200 rechargings

Operation temperature range: 32°F~113°F (0°C~45°C)

Storage temperature range: −68°F~113°F (−20°C~45°C)

Output: Dual DC +6V, −6V

Dimensions (W×H×D): 126×12×126mm
(4-31/32"×15/32"×4-31/32")
(without protrusions)

Weight: 620g (1.4lbs.)

Specifications are subject to change without notice for further improvement.
Weight and dimensions are approximate.

■ CONTENTS

	Page
SAFETY PRECAUTION	2
PRECAUTION OF LASER DIODE	3
ACCESSORIES	3
LOCATION OF CONTROLS	4
OPERATION	5
SET-UP AND CONNECTIONS	7
CLEANING OF LENS	8
HANDLING PRECAUTIONS FOR OPTICAL PICKUP	8
DISASSEMBLY INSTRUCTIONS	9
WIRING DIAGRAM	12
HOW TO REPLACE CHIPS	12
HOW TO REPLACE IC'S (Small Outline type)	13
RESISTORS AND CAPACITORS	14
INTERNAL CONNECTIONS OF LCD	15
TROUBLESHOOTING	16
TERMINAL FUNCTION OF LSI	19
EXPLODED VIEW	23
REPLACEMENT PARTS LIST	25
PACKING	27
PRINTED CIRCUIT BOARD	28
SCHEMATIC DIAGRAM	31
BLOCK DIAGRAM	35

■ SAFETY PRECAUTION (This "safety precaution" is applied only in U.S.A.)

1. Before servicing, unplug the power cord to prevent an electric shock.
2. When replacing parts, use only manufacturer's recommended components for safety.
3. Check the condition of the power cord. Replace if wear or damage is evident.
4. After servicing, be sure to restore the lead dress, insulation barriers, insulation papers, shields, etc.
5. Before returning the serviced equipment to the customer, be sure to make the following insulation resistance test to prevent the customer from being exposed to a shock hazard.

• INSULATION RESISTANCE TEST

1. Unplug the power cord and short the two prongs of the plug with a jumper wire.
2. Turn on the power switch.
3. Measure the resistance value with ohmmeter between the jumpered AC plug and each exposed metal cabinet part, such as screwheads antenna, control shafts, handle brackets, etc. Equipment with antenna terminals should read between 3MΩ and 5.2MΩ to all exposed parts. (Fig. A) Equipment without antenna terminals should read approximately infinity to all exposed parts. (Fig. B)

Note: Some exposed parts may be isolated from the chassis by design. These will read infinity.

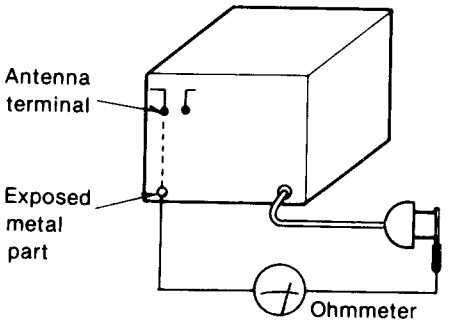

(Fig. A)

Resistance = 3MΩ—5.2MΩ

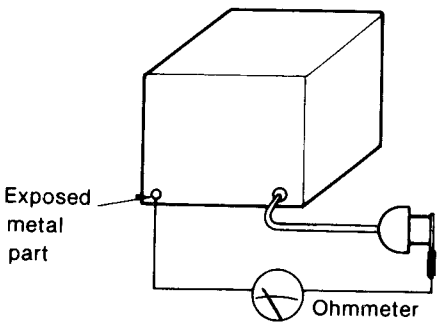

(Fig. B)

Resistance = Approx ∞

4. If the measurement is outside the specified limits, there is a possibility of a shock hazard. The equipment should be repaired and rechecked before it is returned to the customer.

Adjustment and Checking Method Power-on Manual

■ MEASUREMENTS AND ADJUSTMENTS

Caution:
- It is very dangerous to look at or touch the laser beam. (Laser radiation is invisible.)
  With the unit turned "on", laser radiation is emitted from the pickup lens.
  Be careful during adjustments in particular.

ELECTRICAL ADJUSTMENT

Measuring Instruments and Special Tools

- Servo gain adjuster (SZZP1017F)
- Test disc
  Test disc (SZZP1014F) old type
  Test disc (SZZP1014F) new type
  Inspection test disc (SZZP1054C)
  Uneven disc (SZZP1056C)
  Black band disc (SZZP1057C)
- Ordinary disc
- Short lead wire
- Conversion connector (SZZP1032F)
- Connector with lead wire (SZZP1074C)
- Filter for tracking offset balance (SZZP1060C)
- Power supply connector (SZZP1077C)
- Two-channel oscilloscope (with trigger) of 30 MHz or over
- Low frequency oscillator
- DC power supply unit

Adjustment Points

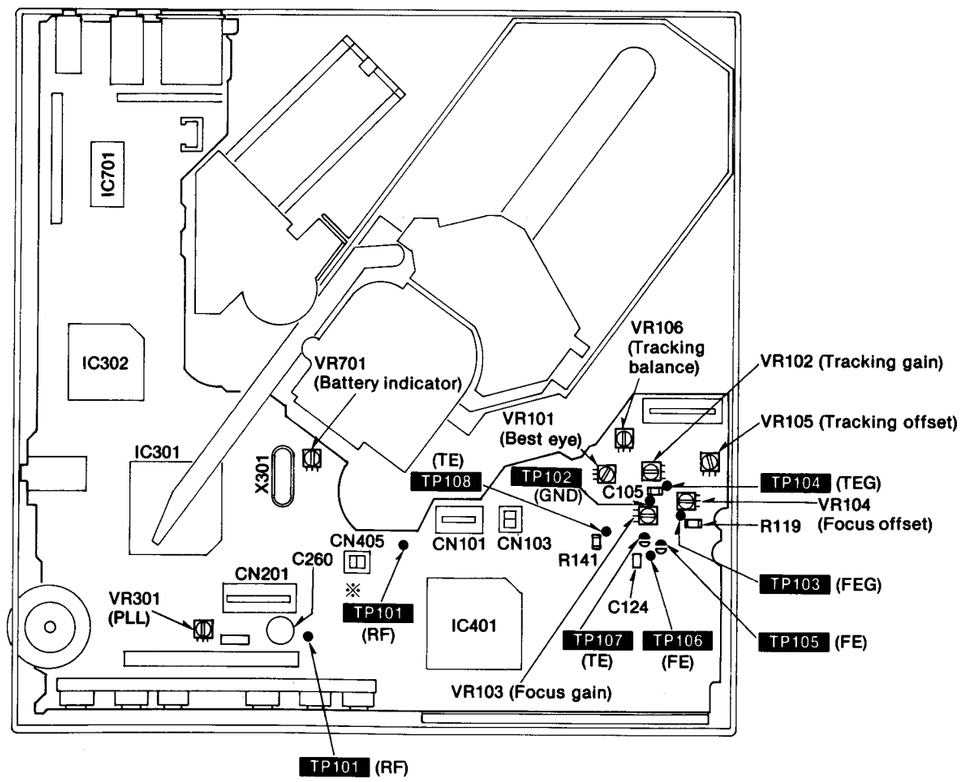

※ This Test point (TP101) was added during the production.

Preparation for Adjustments

1. Installation of servo gain adjuster (SZZP1017F).
   a) Be sure to turn off the power switch of the player.
   b) Remove the battery pack supply connector (CN702) and install the **power supply connector (SZZP1077C)** instead. Connect the clips of servo gain adjuster to the power supply connector lead wires, matching the colors of the lead wires.
   c) Connect the connector of servo gain adjuster to the **conversion connector (SZZP1032F)** and the **connector with lead wire (SZZP1074C)**.
   d) Remove the solder shorted part of focus and tracking gain circuit.
   e) Solder the lead wires of the **connector with lead wire (SZZP1074C)** to the test points. (TP105 to Red, TP106 to Brown, TP107 to Yellow, TP108 to Orange)
2. Solder the oscilloscope connecting short lead wires to TP101 (RF), TP102 (GND), TP103 (FEG), and TP104 (TEG) of the P.C.B.

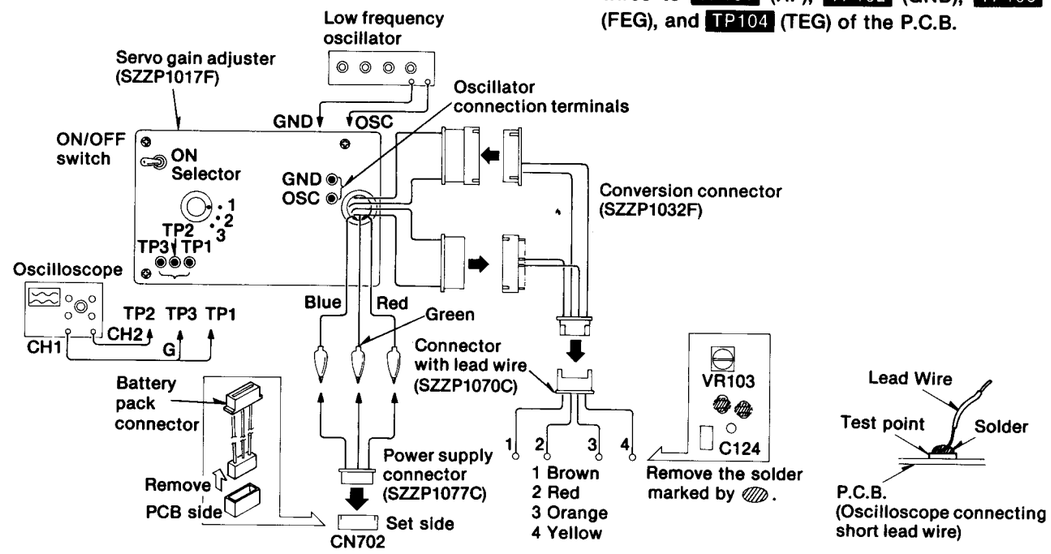

Adjustment Procedure

Step 1: Temporary setting of each VR. (Mechanical center)
▼
Step 2: Best eye (PD balance) adjustment.
▼
Step 3: Focus gain adjustment.
▼
Step 4: Tracking gain adjustment.
▼
Step 5: Focus offset adjustment.
▼
Step 6: Tracking offset adjustment.
▼
Step 7: Tracking balance adjustment.
▼
Step 8: PLL adjustment.
▼
Step 9: Check of operation after adjustment.
▼
Step 10: Battery indicator adjustment.

BEST EYE (PD BALANCE) ADJUSTMENT

1. Set the selector switch of the servo gain adjuster to "2" and ON/OFF switch to "ON".
2. Connect CH1 of the oscilloscope to TP101 (+) and TP102 (−) of the P.C.B.
   Oscilloscope setting: VOLT 200mV
   SWEEP.....0.5µsec.
   INPUT.....AC
3. Place the test disc (**SZZP1014F or SZZP1054C**) and turn on the power switch of the player.
4. The player to the play mode.
5. Adjust **VR101** so that the eye pattern of RF signal is stretched to maximum.
6. Turn off the power switch of the player.

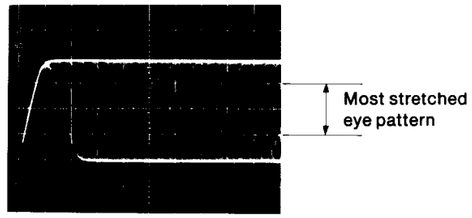

FOCUS GAIN ADJUSTMENT

1. Set the low frequency oscillator to **1kHz** and an output voltage **150mVp-p**, Then connect the oscillator to the terminals **OSC** and **GND** of the servo gain adjuster.
2. Connect CH1 and CH2 of the oscilloscope to **TP1** and **TP2** of the servo gain adjuster.
   (**TP3** is the grounding terminal.)
   Oscilloscope setting: VOLT 100mV
   (both channels)
   SWEEP.....1msec.
   INPUT.....AC
3. Place the test disc (**SZZP1014F or SZZP1054C**) and turn on the power switch of the player.
4. The player to the play mode.
5. Set the selector switch of the servo gain adjuster, from "2" to "1" and ON/OFF switch to "ON".

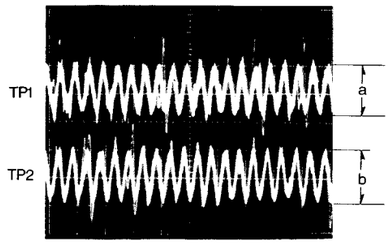

6. The 1kHz signal will be displayed on the oscilloscope. Then adjust **VR103** so that the waveforms and amplitudes of **both channels become equal**.
7. Shift the selector switch of the servo gain adjuster from "1" to "2".
8. Turn off the power switch of the player.

TRACKING GAIN ADJUSTMENT

1. Set the low frequency oscillator to **1.5kHz** and an output voltage **150mVp-p**, Then connect the oscillator to the terminals **OSC** and **GND** of the servo gain adjuster.
2. Connect CH1 and CH2 of the oscilloscope to **TP1** and **TP2** of the servo gain adjuster.
   (**TP3** is the grounding terminal.)
   Oscilloscope setting: VOLT 100mV
   (both channels)
   SWEEP.....1msec.
   INPUT.....AC
3. Place the test disc (**SZZP1014F or SZZP1054C**) and turn on the power switch of the player.
4. The player to the play mode.
5. Set the selector switch of the servo gain adjuster from "2" to "3" and ON/OFF switch to "ON".

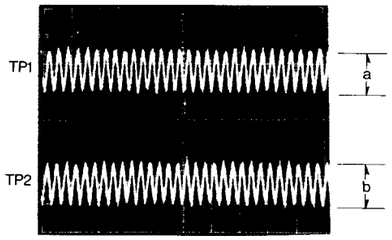

6. The 1.5kHz signal will be displayed on the oscilloscope. Then adjust **VR102** so that the waveforms and amplitudes of **both channels become equal**.
7. Shift the selector switch of the servo gain adjuster from "3" to "2"
8. Turn off the power switch of the player.

FOCUS OFFSET ADJUSTMENT

1. Connect CH1 of the oscilloscope to the TP101 (+) and TP102 (−). Connect CH2 to the TP103 (+) and TP102 (−) of the P.C.B.
   Oscilloscope setting: VOLT 500mV (CH1)
   200mV (CH2)
   SWEEP.....0.5msec.
   INPUT.....AC (CH1)
   DC (CH2)
   MODE.....NORM
   (Triggering via CH1)
2. Place the test disc (**SZZP1057C, Black band disc**) and turn on the power switch of the player.
3. The player to the play mode.
4. Check the waveforms of CH1 and CH2 on the oscilloscope and adjust **VR104**, so that the waveform around the triggering point becomes as shown in the illustration.

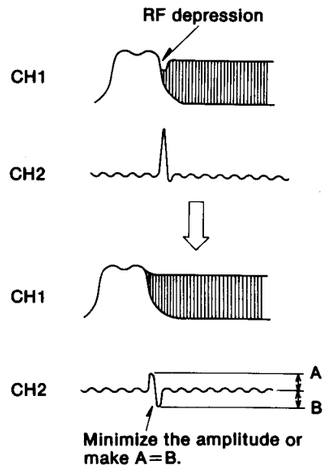

TRACKING OFFSET ADJUSTMENT

1. Connect CH1 of the oscilloscope to the TP101 (+) and TP102 (−). Connect the CH2 to the TP104 (+) and TP102 (−) of the P.C.B.
   Oscilloscope setting: VOLT 500mV (CH1)
   200mV (CH2)
   SWEEP.....0.5msec.
   INPUT.....AC (CH1)
   DC (CH2)
   MODE.....NORM
   (Triggering via CH1)
2. Place the test disc (**SZZP1057C, Black band disc**) and turn on the power switch of the player.
3. The player to the play mode.
4. Check the waveforms of CH1 and CH2 on the oscilloscope and adjust **VR105** so that the waveform around the triggering point becomes as shown in the illustration.

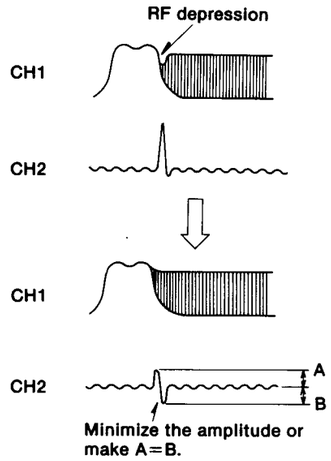

TRACKING OFFSET BALANCE ADJUSTMENT

1. Solder the **filter for tracking balance (SZZP1060C)** to the test point as shown.
   Remove the short lead wires TP104 and TP102 connected during the preparation for adjustment.
2. Connect CH1 of the oscilloscope to Ⓑ (+) and Ⓒ (−) of the filter for tracking balance.
   Oscilloscope setting: VOLT 20mV
   SWEEP.....1msec.
   INPUT.....DC
3. Place the **test disc (SZZP1014F or SZZP1054C)** and turn on the power switch.
4. The player to the play mode.
5. After playing, set the ON/OFF switch to "**OFF**" of the servo gain adjuster.
6. Adjust **VR106** so that the voltage at the waveform center of the oscilloscope is **0±10mV**.
7. After the adjustment, shift the ON/OFF switch to "**ON**" of the servo gain adjuster.

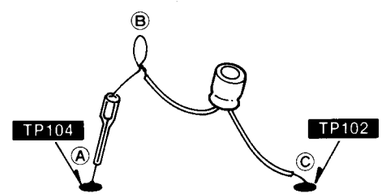

(Filter for tracking balance)

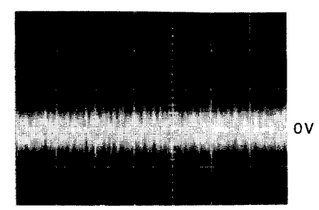

PLL ADJUSTMENT

1. Connect CH1 of the oscilloscope to the **line out terminal** (either of Lch or Rch) and **ground.**
   Oscilloscope setting: VOLT 1V
   SWEEP .....1msec.
   INPUT .....DC
2. Place the **test disc (SZZP1054C)** and turn on the power switch.
3. Play **Track 6 (wedge 0.7mm)** of the test disc.
4. Check the waveform displayed on the oscilloscope and adjust **VR301** in the following steps.
   Step 1. Turn **VR301** clockwise slowly and observe the point at which the waveform on the oscilloscope begins to be disturbed.
   Step 2. Turn **VR301** counterclockwise slowly and observe the point at which the waveform on the oscilloscope begins to be disturbed.
   Step 3. Set **VR301** in the middle between the points observed in the above steps "1" and "2".
5. Turn off the power switch of the player.

• NG

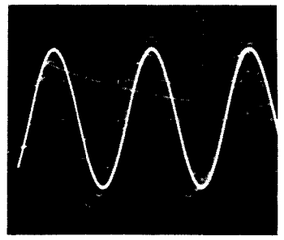

• OK

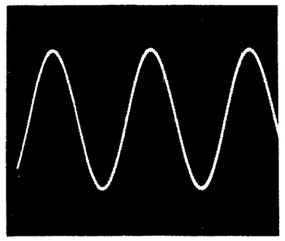

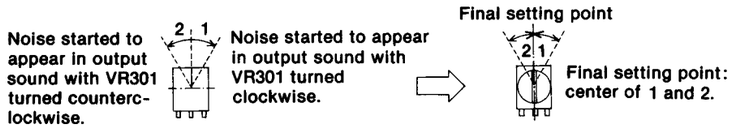

REMOVAL OF THE SPACIAL TOOLS

1. Remove the servo gain adjuster.
2. Shift the battery pack power connector as it was.
3. Remove the lead wire soldered to the test point.
4. Solder the open portions of focus servo and tracking servo circuits.

CHECK OF PLAY OPERATION AFTER ADJUSTMENT

• Check of skip search

1. Play an ordinary disc.
2. Press the skip button and check to see that the skip search functions (forward and reverse).

• Check of manual search

1. Play an ordinary disc.
2. Press the manual search button and check to see that smooth manual search can be done at low and high speeds (forward and reverse).

• Check to make sure the best adjusted condition for defects

1. Play the test disc (SZZP1054C).
2. Play the track 6 (wedge 0.7mm) and see that there is no sound skip or noise.
3. Play the track 13 (black dot 0.7mm) and see that there is no sound skip or noise.

BATTERY INDICATOR ADJUSTMENT

1. Be sure to remove the AC adaptor from the player.
2. Remove the battery pack power supply connector CN702 and install the **power supply connector (SZZP1077C)** instead.
3. Connect DC power supply units to the power supply conector.
   Red lead .....+5.9V
   Green lead .....Ground
   Blue lead .....−7.2V
4. Re-check the voltage from **DC power supply unit** and adjust it to **+5.9V.**
5. Turn on all the digits of the battery indicator by **VR701**, and turn them off in order. Stop turning **VR701** when the 3rd digit turns off coming down to the 2nd digit.

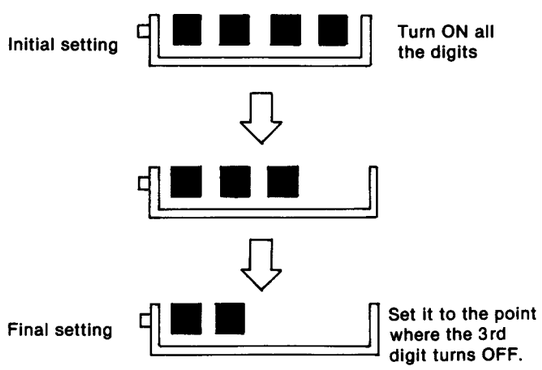

OPTICAL PICKUP ADJUSTMENT

Measuring Instruments and Special Tools

- Two-channel oscilloscope (with trigger) of 30MHz or over
- Test disc
  Test disc (SZZP1014F) old type
  Test disc (SZZP1014F) new type
  Inspection test disc (SZZP1054C)
- Hexagonal wrench (2mm)
- Screw lock paint (RZZ0L01)
- Lead wires

Adjustment Procedure and Adjustment Points

- If the optical pickup is replaced, adjust it according to the following procedure.

Stop 1: Temporary setting of each VR. (Mechanical center)

Step 2: Turntable height adjustment.

Step 3: Mechanical adjustment.

Step 4: Electrical adjustment. ...See pages 1~5.

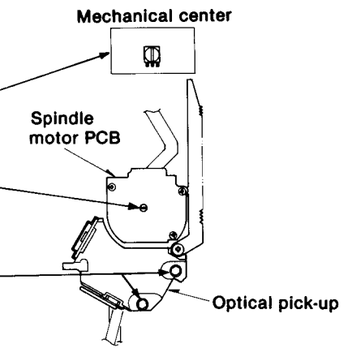

TURNTABLE HEIGHT ADJUSTMENT

1. Turn off the power switch of the player.
2. Solder the lead wires to TP103 (FEG) and TP102 (GND) of the P.C.B. so that the probe of oscilloscope can be connected.
3. Connect CH1 of the oscilloscope to the TP103 (+) and TP102 (−) of the lead wires.
   Oscilloscope setting: VOLT 200mV
   SWEEP .....5msec.
   INPUT .....DC
4. Set the oscilloscope to DC zero balance.
5. Place the **test disc (SZZP1014F or SZZP1054C)** and turn on the power switch of the player.
6. Hold the set by the hand with the top face up.
7. The player to the play mode.
8. Turn the **adjusting screw** at the bottom of the spindle motor drive P.C.B. with a flat screwdriver so that the waveform is **0±50mV.**
9. Turn off the power switch of the player.
10. After the adjustment, apply **screw lock paint (RZZ0L01)** to the adjusting screw.

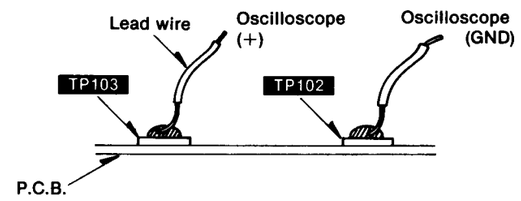

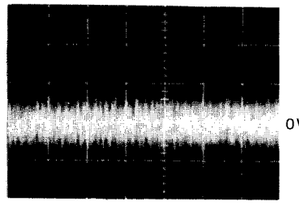

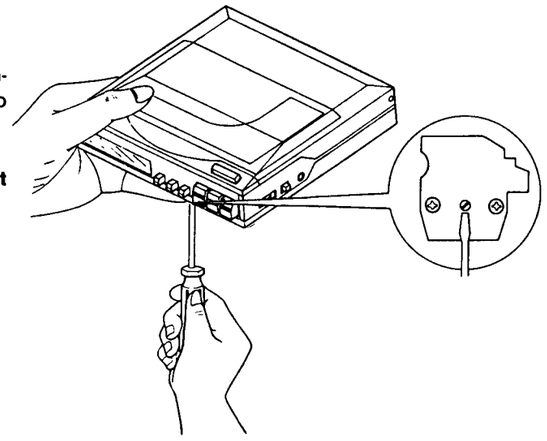

MECHANICAL ADJUSTMENT

1. Connect CH 1 of the oscilloscope to TP101 (+) and TP102 (−) of the P.C.B.
   Oscilloscope setting: VOLT 200mV
   SWEEP.....0.5µsec.
   INPUT.....AC
2. Place the **test disc (SZZP1056C)** and turn on the power switch of the player.
3. Monitoring the RF signal on the oscillosocpe, adjust the **two adjusting screws** alternately so that the vertical fluctuation of RF signal is minimized and the eye pattern most open.
4. Turn off the power switch of the player.
5. After the adjustment, apply **screw lock paint (RZZ0L01)** to the two adjusting screws.

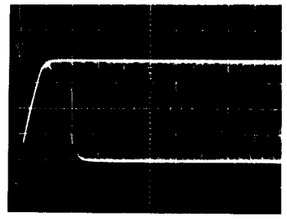

■ CHECKING METHOD POWER-ON

• Check the parts on the back of the P.C.B., voltage, etc. according to the following procedure.

Special Tools

• FPC extension cord (SZZP1075C)

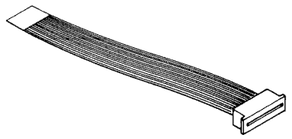

• Extension connector (SZZP1076C)

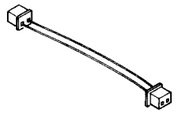

Procedure

1. Remove the bottom cover.
2. When the optical pickup is at the inner periphery, the P.C.B. cannot be removed because of the rack gear. So, remove the traverse motor setscrews (Ⓐ, Ⓑ) and shift the optical pickup to the outer periphery, then secure the traverse motor with the screws.
3. Remove the spindle board FPC (CN201) and inner periphery detection switch connector (CN405).
4. Remove the screws Ⓒ which fastens the P.C.B.

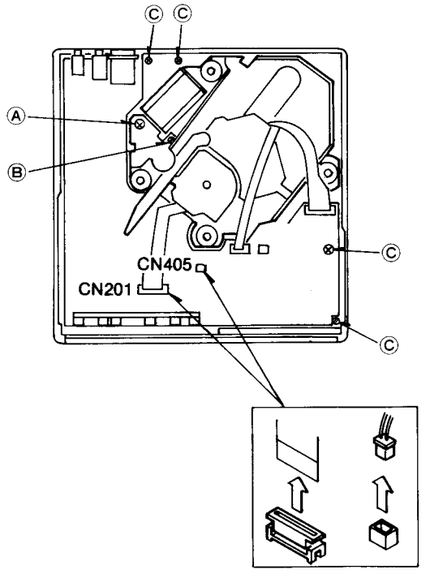

5. Remove the P.C.B. and place it in the position as shown, then connect the FPC extension cord and extension connector. (Connect the FPC extension cord in correct position.)
6. Solder the terminals of switch (S1) to make them shorted.

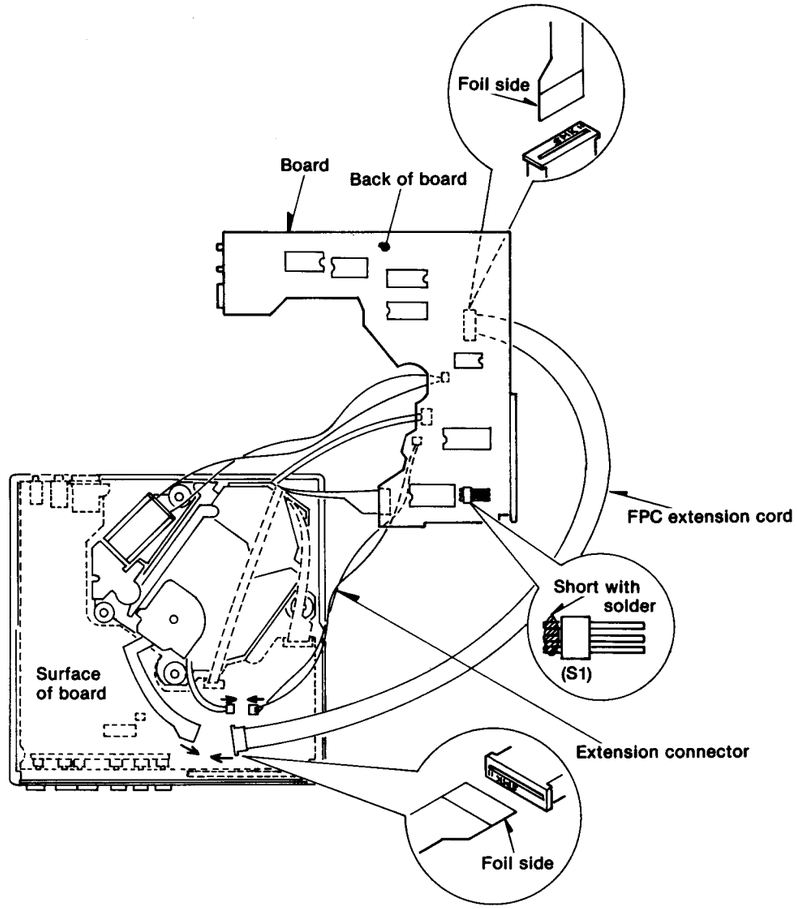

Printed in Japan
860809800 Ⓗ AM

ORDER NO. HAD8803086S0
A6

Service Manual

Supplement

Compact Disc Player

Portable CD Player

SL-XP5

COMPACT disc DIGITAL AUDIO

DIGITAL

Please file and use this supplement manual together with the service manual for Model No. SL-XP5, Order No. HAD8607690C0.

Note:

- This supplement has been issued to correct an error in the "Cabinet Parts Location" on page 23.

CORRECTION

■ REPLACEMENT PARTS LIST

Ref. No.	Change of Parts No. OLD	→ NEW	Part Name & Description	Remarks
CABINET PART				
4	SHRD27-1	**SHRD100**	CAP	Change
SCREW				
N24	——	**XTN14+CJ15FZ**	SCREW	Addition

Technics

Matsushita Services Company
50 Meadowland Parkway,
Secaucus, New Jersey 07094

Panasonic Sales Company, Division of Matsushita Electric of Puerto Rico, Inc.
Ave. 65 De Infanteria, Km.9.7
Victoria Industrial Park
Carolina, Puerto Rico 00630

Panasonic Hawaii, Inc.
91-238, Kauhi St. Ewa Beach
P.O. Box 774
Honolulu, Hawaii 96808-0774

Matsushita Electric of Canada Limited
5770 Ambler Drive, Mississauga,
Ontario, L4W 2T3

Matsushita Electric Trading Co., Ltd.
P.O. Box 288, Central Osaka Japan

Panasonic Tokyo Office
Matsushita Electric Trading Co., Ltd.
6th Floor, world Trade Center Bldg.,
No. 4-1, Hamamatsu-cho 2-Chome,
Minato-ku, Tokyo 105, Japan

■ CABINET PARTS LOCATION

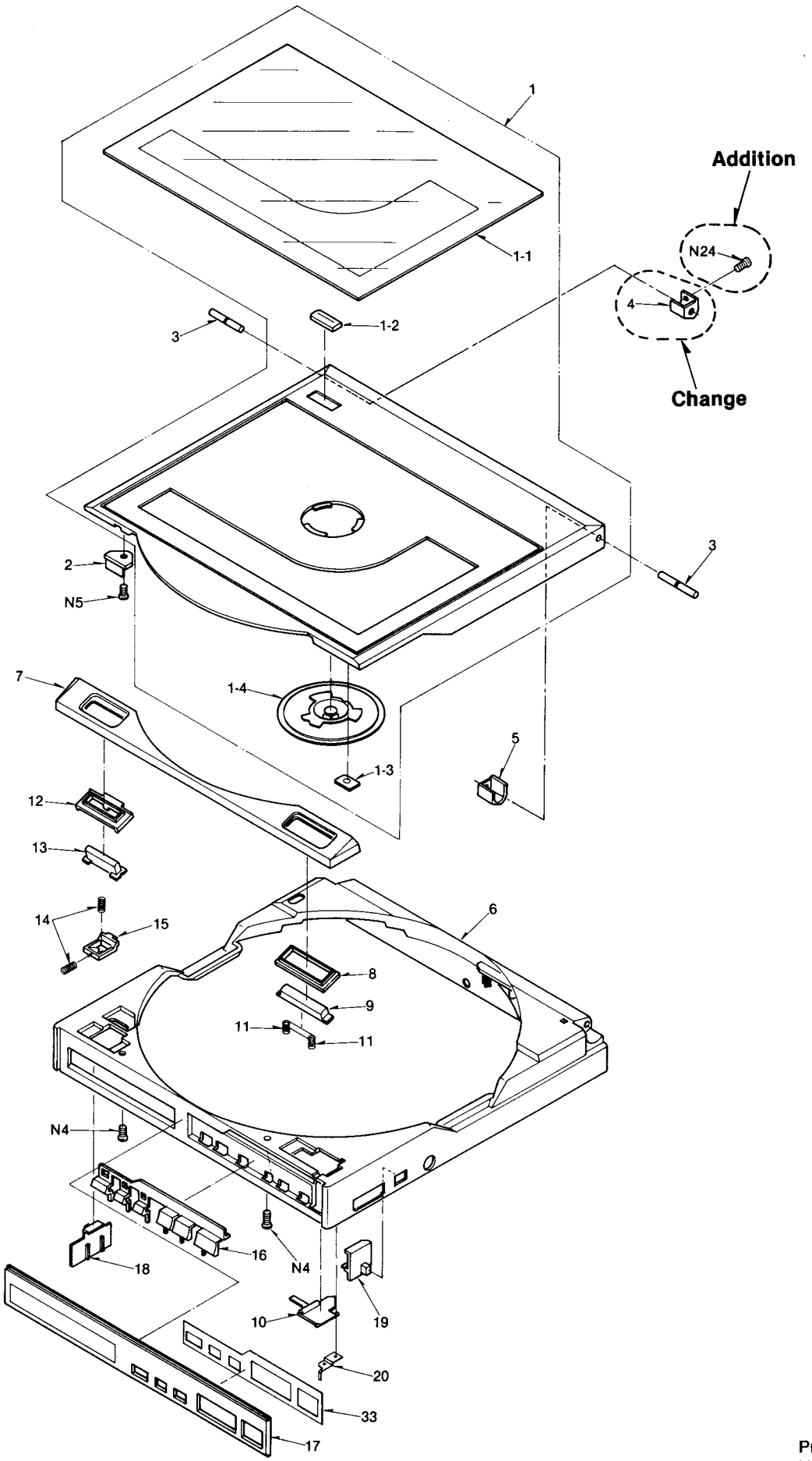

Printed in Japan
H880311420SN

■ PRECAUTION OF LASER DIODE

CAUTION:

THIS PRODUCT UTILIZES A LASER.
USE OF CONTROLS OR ADJUSTMENTS OR PERFORMANCE OF PROCEDURES OTHER THAN THOSE SPECIFIED HEREIN MAY RESULT IN HAZARDOUS RADIATION EXPOSURE.

ADVARSEL:

I DETTE A APPARAT ANVENDES LASER.

• Use of caution labels

•For [E], [EK], [XL], [EG], [EB], [EH], [EF], [Ei], and [XB] areas.

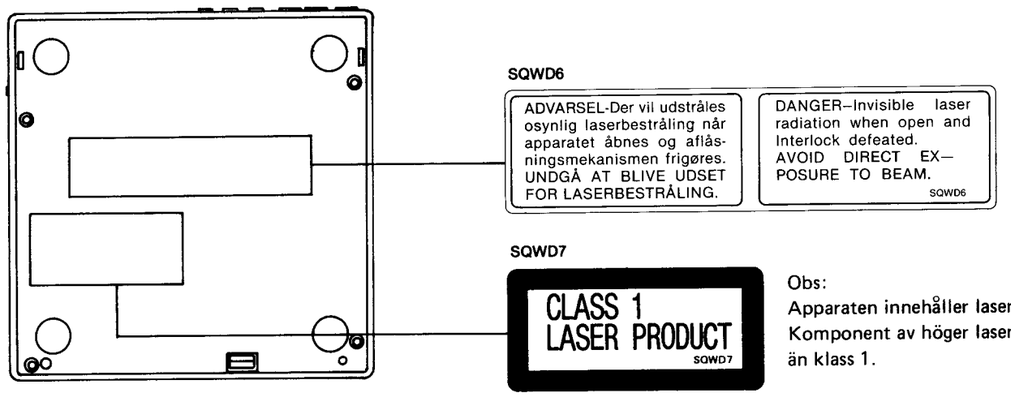

Obs:
Apparaten innehåller laser Komponent av höger laserklass än klass 1.

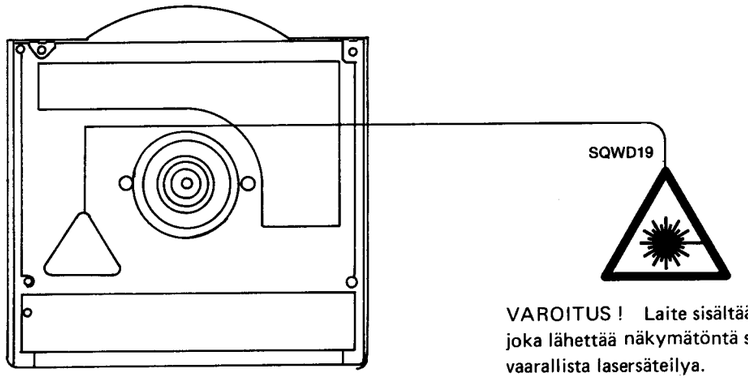

VAROITUS ! Laite sisältää laserdiodin, joka lähettää näkymätöntä silmille vaarallista lasersäteilya.

■ ACCESSORIES

AC adaptor	Rechargeable battery	Soft carrying case	Stereo connection cable	**Note:** Stereo earphones
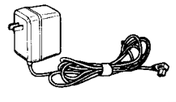				

Note: Stereo earphones are inclueded in the set for [M], [MC], [XL], [XA], and [XB] areas as an accessory.
For other areas, stereo earphones are option.

■ LOCATION OF CONTROLS

Front panel

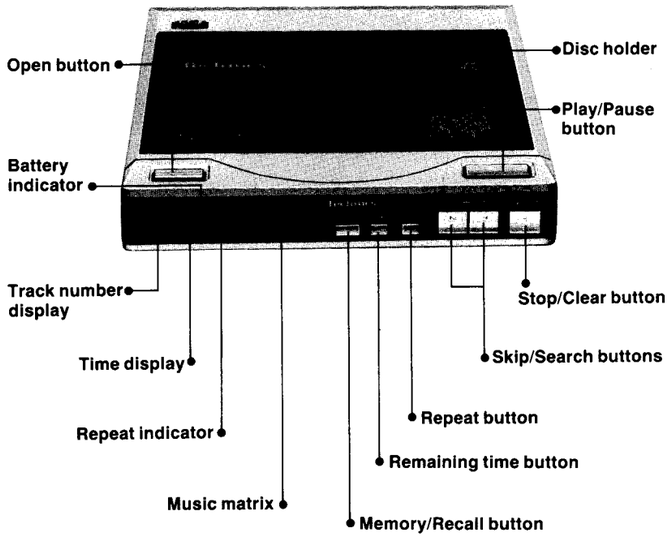

Left side panel

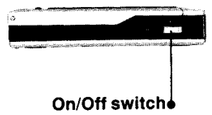

Back panel

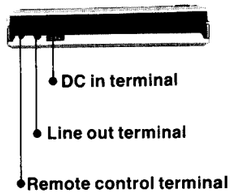

Right side panel

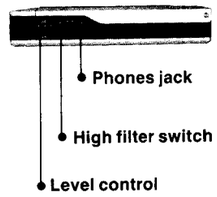

Rechargeable battery (included):
The battery of this unit was charged by the manufacturer before shipping. However, during transport and storage it may have discharged.
Be sure to recharge the battery before using it for the first time.
Note: If the battery is nearly discharged, all battery indicator display segments and the repeat indicator will flash on and off. If the battery is completely discharged, there will be no display at all.
CAUTION with AC Adaptor: Charge only the battery, Model **SH-CDB5U**. Other types of battery may burst causing personal injury and damage.

• About the Soft Carrying Case

Always use the soft carrying case when carrying the unit and rechargeable battery. When attaching or removing the shoulder belt, place the unit horizontally on a flat surface to prevent dropping it.

■ Attaching the shoulder belt

1 Put the portable CD player into the soft carrying case, so that the two metal eyelets on the rechargeable battery protrude from the slits in the carrying case.

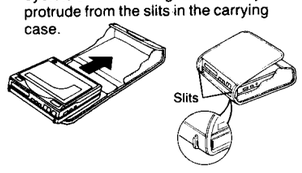

2 Press in the belt stopper, slide the holder in the direction of the arrow and then hook one end of the belt to one of the metal eyelets. Attach the other end in the same manner.

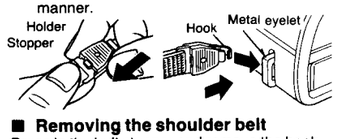

■ Removing the shoulder belt

Press in the belt stopper and remove the hook from the metal eyelet.
To adjust the length of the belt, loosen or tighten it little by little as shown in the figure. Be sure to leave about 3 cm (1³⁄₁₆") at the end of the belt, to prevent it from slipping out.

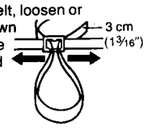

• How to use Stereo Earphones

■ Taking out the earphones

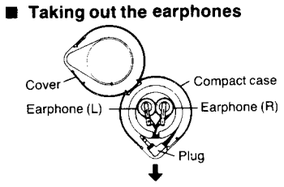

1. Holding the plug body pull out the phone lead in direction of the arrow.
2. Open the cover of the compact case and taking hold of the body take out the earphones.

■ Putting the earphones back into their case

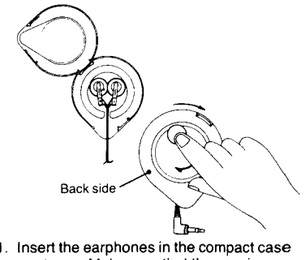

1. Insert the earphones in the compact case as shown. Make sure that they are in securely, then close the cover.
2. Rotate the back of the compact case in the direction of the arrow, as shown in the figure, to wind up the phone lead.

■ Notes:

•If the earphones do not fit into the ears properly, cover them with the ear pads (included).
•Before plugging the earphones into the jack, be sure to reduce the volume level to the minimum to avoid damaging the earphones or your hearing.
•Do not place or store earphones in the following places:
1) Locations exposed to direct sunlight.
2) Humid or dusty locations.

■ OPERATION

(The following explanation will use, as an example, a compact disc on which 7 tracks, having a total playing time of 49 minutes and 58 seconds are recorded.)

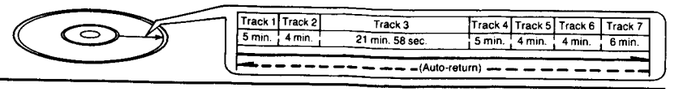

To listen from the beginning of a disc (automatic play)

To listen to the disc from the beginning to the end...
(First, set the level controls of this unit and the amplifier to the minimum.)

1 Switch "on".
Display illuminates momentarily as shown below.

Music matrix
Overflow indicator

Up to 15 tracks can be shown in the music matrix display.
The > indicator will illuminate if the disc contains more than 15 tracks.

2 Press (open) button.
Open the disc holder fully.

3 Insert the disc.
Label must face upward.

4 Close by hand.
Note:
- Close by pushing down near the "open" mark, until the disc holder locks in place.
- The disc will begin rotating and the total number of tracks and total playing time will be displayed, then the player switches to the stop mode. The > indicator will illuminate if there are more than 15 tracks on the disc.

Total playing time (Time display)
Total number of tracks (Track display)

5 (play/pause) Press.
Disc play begins from track 1.
During disc play the number of the track being played flashes on and off.

Flashes on and off.
Playing time
Track number

■ Press the (play/pause) button to stop play for a moment.
- The disc is rotating while the unit is in the pause mode.

Flash on and off during the pause mode.

- When pressed again, play will resume from where it was.

■ Press the (stop/clear) button to stop play before disc ends.
- The disc will stop, and the disc's total number of tracks and total playing time will be displayed.
- All program settings are cancelled when this button is pressed.

Total playing time
Total number of tracks

■ When play ends
The disc stops rotating and the total number of tracks and total playing time are displayed.
(Now, the unit is in the stop mode.)
(Stop mode)
- Press the open button and take out the disc.
- Switch power OFF.

■ Press the (remain time) button if you want to know the remaining time.
(remaining time display function)

On/Off switch
Open button

To listen to a certain track(s) repeatedly (repeat play)

Using this function all tracks or only the programmed tracks are played repeatedly.

■ Press the (repeat) button before or during play.

The repeat indicator will illuminate.
When pressed again, it goes out.

- All tracks will be repeated during automatic play.
- During direct play, the tracks from the selected track to the end of the disc are played, then the pickup returns to the first track and plays all tracks repeatedly.
- Each programmed track will be repeated, during program play.
- To repeat only one track, program that track, then press the repeat button.

Repeat indicator

Repeat play continues until this button is pressed again to cancel the repeat mode (indicator goes out).

To search for a certain track (search play)

Using this function it is possible to search a certain location during disc play, and play from that point on. (During disc play.)

- For search play, keep either button pressed. (Any desired position on the disc can be found by moving the pickup fast forward or fast backward during disc play.

  ⏭ Forward skip/search button (Pickup moves forward.)
  ⏮ Backward skip/search button (Pickup moves backward.)

- The pickup moves slowly at first and then rapidly, it the search button is held down.
- The desired track can be found by listening to the disc sound [at about −12 dB (¼) of the normal volume level].

■ During program play,
search is possible only within the track being played. To search for some other track, follow the "skip" procedure to find the start of the track, and then perform search as necessary.

To listen to tracks in a certain order (program play)

Using this function up to 18 tracks can be programmed in any order.
(For example, if track 3, track 5 and track 1 are programmed and played in this order.)

4 Press the (play/pause) button.
Program disc play begins from track 3.

Note:
- All program entries will be cancelled when the disc is taken out, or if play is stopped before the end.

1 Press one of the (-skip/—search) buttons to select the track number.
⏭ Button to move the pickup forward track by track.
⏮ Button to move the pickup backward track by track.
Press 3 times to program the 3rd track.
If you advance too far, press the ⏮ button to return.
- The selected track number will appear in the display.

Track number

■ Press during disc play, to confirm the program contents.

3 Repeat steps 1 and 2 to program the desired tracks in the desired order.
For example, when track 3,5 and 1 are programmed in that order, the display advances through the following steps.

Second entry
Third entry

Display and programming sequence
(Programming is not possible during disc play.)

2 Press the (memory/recall) button to program the track number.
The display below shows track 3 is programmed.

Programming completed.
Track number
First entry

To listen immediately to a certain track (random access play)

Any desired track can be accessed immediately.
(When the unit is in the stop mode.)
In the example, track 3 is selected for random access play.

2 Press the (play/pause) button.
- Play will start from track 3 and continue to the end of the disc.
- The player switches to the stop mode when disc play has ended.

1 Press one of the (-skip/—search) buttons momentarily to select the desired track number.
For example, press the ⏭ button 3 times to start from track 3.
If you advance too far, press the ⏮ button to return.

Repeat button

■ SET-UP AND CONNECTIONS

Connection of power source

This unit can be operated by the following power sources:

1. Household AC power (AC adaptor: **SH-CDA5U: Included)**
2. Rechargeable battery **(SH-CDB5U:** included)
3. Automobile cigarette lighter socket (car adaptor: SH-CDC7 option)

CAUTION:
Use only car adaptor, Model: SH-CDC7 manufactured by Matsushita Electric Industrial Co., Ltd.

1 Connection to a household AC outlet

Use the included AC adaptor.

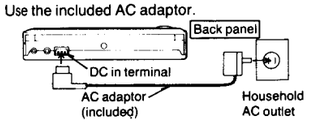

2 Using the rechargeable battery

Use only the rechargeable battery included with this unit.

When attaching or removing the rechargeable battery, place the battery horizontally on a flat surface to prevent dropping it.

■ Attaching the rechargeable battery

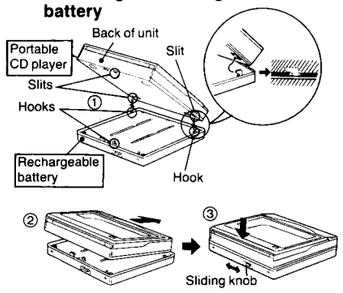

① Set the slits of the unit onto the hooks of the rechargeable battery.
② Slide the unit in the direction of the arrow and fit the unit and battery together.
③ While gently pressing down on the back of the unit, move the sliding knob of the rechargeable battery to the right and then to the left.
Confirm that the sliding knob is locked in its left most position.

Notes: 1. Make sure that the sliding knob is locked completely or the unit may be disconnected from the battery.
2. Be careful not to drop the battery.
3. Do not allow any foreign metal objects to touch the terminals. This may cause a short circuit and damage the unit.

■ Removal

Push the sliding knob to the unlock position and lift the portable CD player from the rechargeable battery (refer to above illustration ③→②).
Note: Be careful not to drop the unit or battery.

Recharging the battery

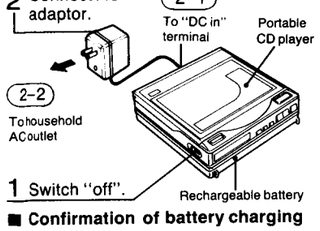

■ Confirmation of battery charging condition

- Disconnect the AC adaptor and set the on/off switch to "on". All battery indicator segments will illuminate momentarily.

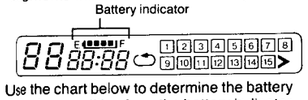

Use the chart below to determine the battery charging condition from the battery indicator (AC adaptor must be disconnected).

Battery indicator	Operation of unit	Recharging
E F	possible	unnecessary
E F	possible	unnecessary
E F	possible	recharge soon
E F	possible (see note)	recharge

■ Recharging time

- Recharging only: approx. 5 hours
- Recharging during disc play is possible too, but the recharging time is longer. With a fully charged battery the unit may be operated continuously for about 5 hours. (When the unit is stationary.)

Disconnect the AC adaptor after recharging the battery if the unit is not going to be used for some time.

Notes:
- CD play may be impossible if only one segment of the battery indicator illuminates.
- When using the AC adaptor or car adaptor (option) all four battery indicator segments will illuminate, even if the battery is discharged.
The right most segments may not be steadily illuminated.
- Carefully read the battery handling precautions on page 15.

■ Life of the rechargeable battery

The life of a rechargeable battery is limited. Furthermore, each time the battery is recharged, the length of time that the unit can be used between charges is slightly reduced. When used at room temperature (68°F, 20°C), the battery can be recharged about 200 times before the time between charges is reduced to about half of the initial time. When the length of time between charges gets extremely short, replace the rechargeable battery (SH-CDB5) with a new one (option).

Listening through earphones or headphones

Connect the plug of the earphones (included) or headphones (option) to the phones jack.
See page 4 for use of earphones (included).

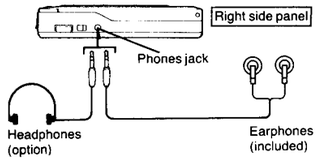

■ Phones level adjustment

(First, turn down the level control.)

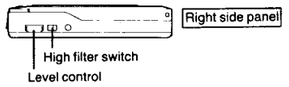

- Adjust the level control:
"max.": The output level increases.
"min.": The output level decreases.
- Set high filter switch to "on", if high-frequency sound range is too strong.

Note:
While listening through the phones, it is normal to hear a switching noise when switching power on or pressing the Play/Pause button.

Listening through an audio system

Use the stereo connection cable (included) to connect this unit to an amplifier or a receiver.

- Switch OFF the power to the amplifier or receiver before connecting this unit.
- Do not connect this unit to the PHONO terminals of the amplifier or receiver.
- Output level adjustment should be performed on the amplifier or receiver.

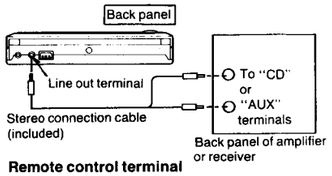

Remote control terminal
If the portable CD player is connected to an amplifier or receiver with an appropriate remote control terminal, the CD player may be operated using the remote control unit of the amplifier or receiver.
(Please refer to the operating instructions of the amplifier or receiver. Contact your dealer for details.)

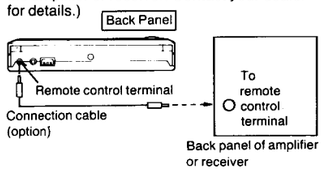

■ CLEANING OF LENS

If the lens is stained causing sound skip or operation failure, open the top cover by pressing the open button, and clean the lens.

• To remove dust or dirt

Blow the lens with the blower provided in the cleaning kit to remove dust or dirt.

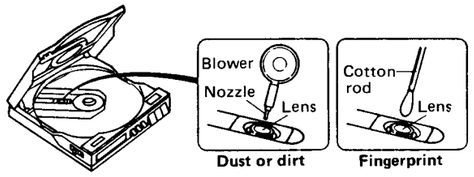

• To remove fingerprint

If the blower is not enough, moisten the cotton rod with the lens cleaner solution and wipe the lens with it from center of the lens to outside.

Cautions:
- Do not directly apply the cleaner solution to the lens. Do not apply too much solution to the cotton rod or otherwise the solution will flow into the player.
- Wipe the lens carefully. Do not give too much stress to the lens or otherwise it may scratch the lens or cause optical pickup trouble.
- If the solution should be too much applied, wipe the lens with a dry cotton rod.

Lens cleaning kit (Part No. : SZZP1038C)

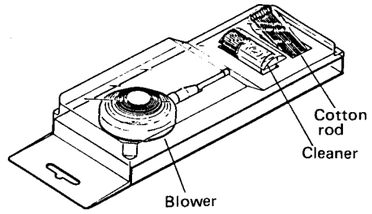

■ HANDLING PRECAUTIONS FOR OPTICAL PICKUP

The laser diode in the optical pickup may break down due to potential difference caused by static electricity of clothes or human body.
So, be careful of electrostatic breakdown during repair of the optical pickup.

• Handling of optical pickup

1. Do not give excessive shock to the optical pickup because it is of extremely high precision structure.
2. To prevent the breakdown of the laser diode, an anti-static shorting pin is inserted into the FPC.
When removing or connecting the short pin, finish the job in a short time.
3. Take care not to give excessive stress to the FPC.
4. Do not turn the variable resistor (laser power adjustment). (It has been already adjusted.)

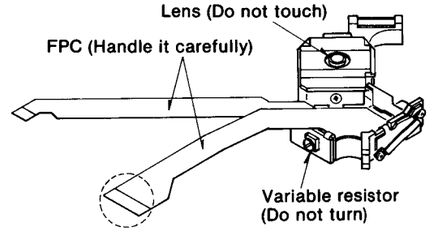

Be sure to short this portion (Use the shorting pin or clip.)

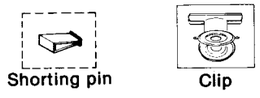

• Grounding for electrostatic breakdown prevention

1. Human body grounding
Use the anti-static wrist strap to relieve the static electricity from your body.
2. Work table grounding
Put a conductive material (sheet) or steel sheet on the area where the optical pickup is placed, and ground the sheet.

Caution:
The static electricity of your clothes will not be grounded through the wirst strap. So, take care not to let your clothes touch the optical pickup.

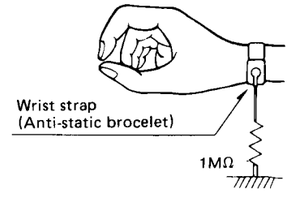

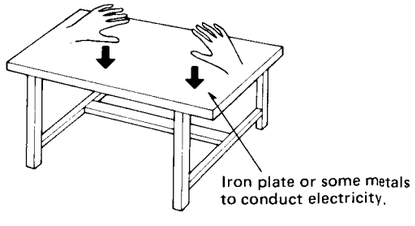

■ DISASSEMBLY INSTRUCTIONS

- **Cautions for laser diode light emission**

In this unit, the compact disc information is read by the laser beam diffused from the laser diode in the optical pickup. It is dangerous to directly look at the laser beam or to let it touch your body. During the normal operation of this unit, the laser diode will not emit light unless the disc holder is closed and S1 (laser ON/OFF switch) is turned ON. When servicing the unit, note that the laser diode emits lights if power switch is turned on with S1 ON.

- **This unit uses FPC and care should to bakes during assembly and disassembly.**

Ref. No. 1	How to remove the bottom cover
Procedure 1	• Remove the 4 screws.

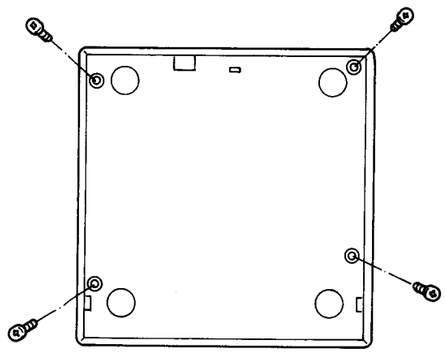

Ref. No. 2	How to remove the chassis assembly
Procedure 1 → 2	1. Remove the 6 screws. 2. Remove the chassis assembly by arrows ❶ and ❷.

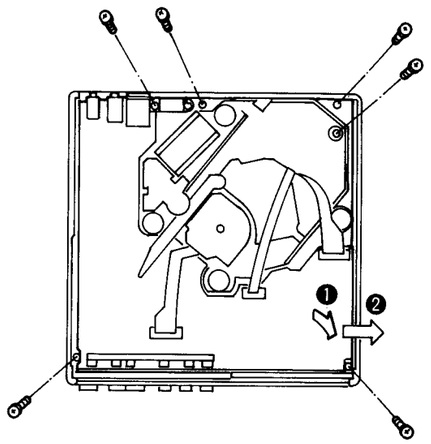

Ref. No. 3	How to remove the play/pause and open buttons
Procedure 1 → 2 → 3	• Remove the 2 screws of front panel.

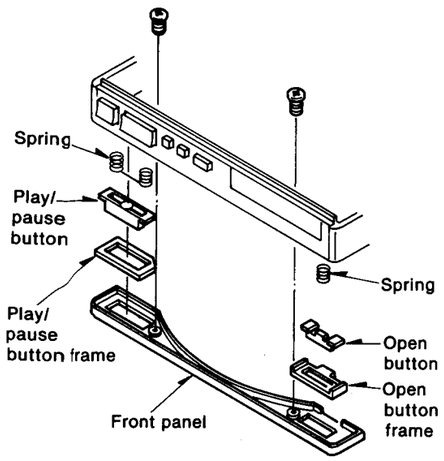

Ref. No. 4	How to remove the operation button
Procedure 1 → 2 → 4	1. Push the arrow-marked part to remove the display panel. 2. Remove the operation button from the cabinet.

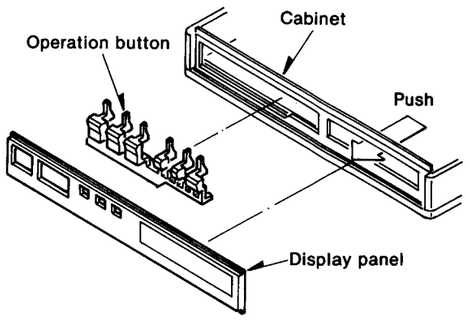

Ref. No. 5	How to remove the top cover
Procedure 1 → 2 → 5	• Push the shaft with a screwdriver to remove the shaft (right and left).

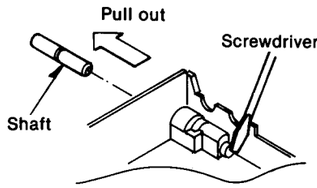

Ref. No. 6	How to remove the main P.C.B.
Procedure 1 → 6	1. Remove the 2 screws. 2. Remove the traverse motor block. 3. Move the optical pickup outside.

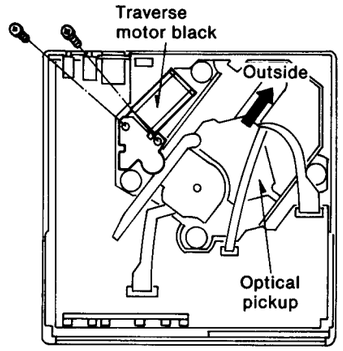

4. Remove the 3 screws ❶~❸, and remove the spindle motor drive coil board.
5. Pull out the 2 connectors (CN103, CN405).
6. Pull out the 3 FPC cords (CN101, CN102, CN201).
7. Remove the 2 screws ❹ and ❺.
8. Remove the main P.C.B. by arrows ❻ and ❼.

Refer to the optical pickup handling precautions (See page 8).

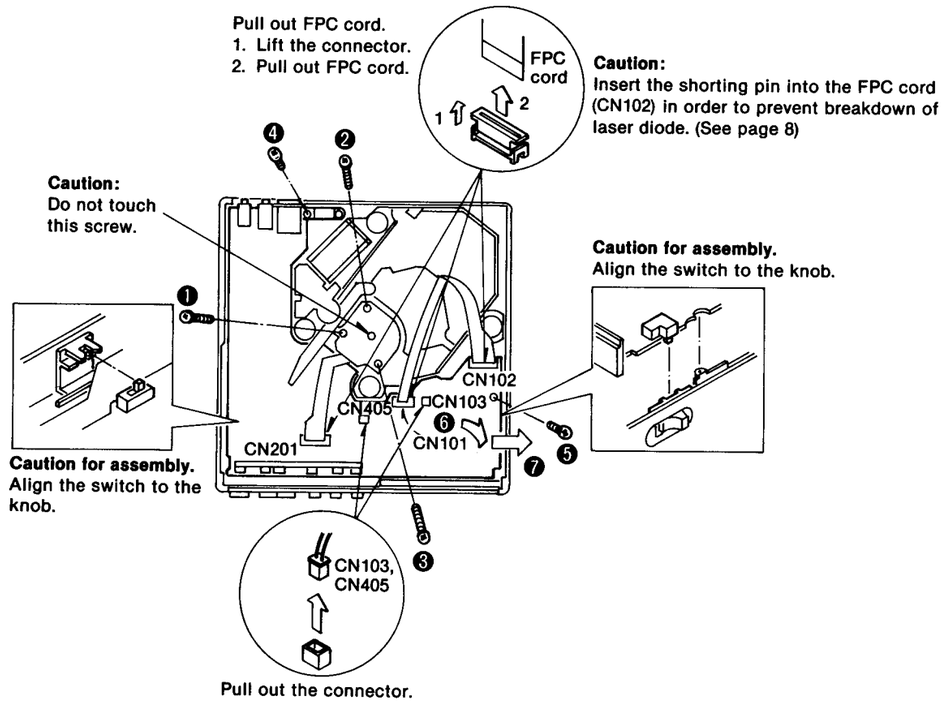

Ref. No. 7	How to remove the optical pickup
Procedure 1 → 7	

Refer to the optical pickup handling precautions (See page 8).

1. Remove the rack setscrew ❶.
Note: Take care not to lose the wave washer.
2. Remove the 2 screws (❷, ❸) of the guide shaft fitting plate A and B.
3. Pull out the FPC cords (CN101, CN102).
4. Pull out the optical pickup in the direction of the arrow Ⓐ.
Note: If the guide shaft is replaced, apply grease (Part No. SZZ0L24) to the guide shaft.

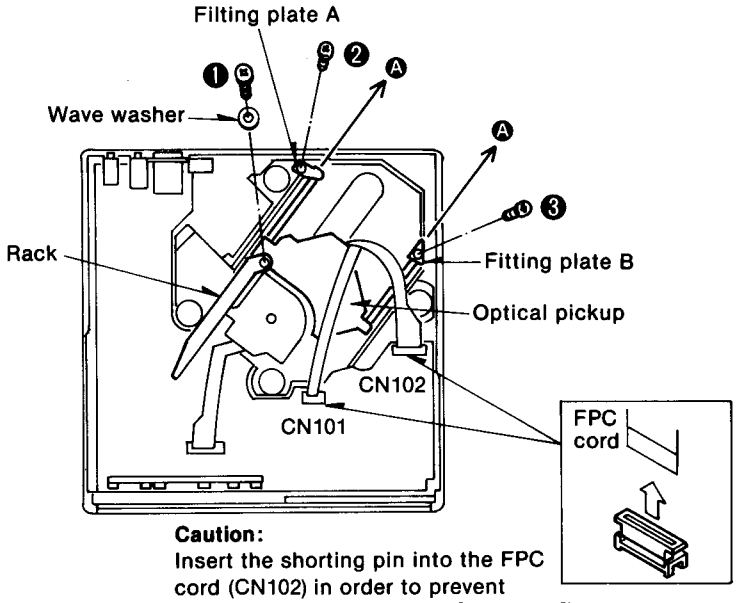

Caution:
Insert the shorting pin into the FPC cord (CN102) in order to prevent breakdown of laser diode. (See page 8)

Ref. No. 8	How to remove the traverse unit
Procedure 1 → 8	

Refer to the optical pickup handling precautions (See page 8).

1. Remove the 4 screws.
2. Pull out the 2 connectors (CN103, CN405).
3. Pull out the 3 FPC cords (CN101, CN102, CN201).

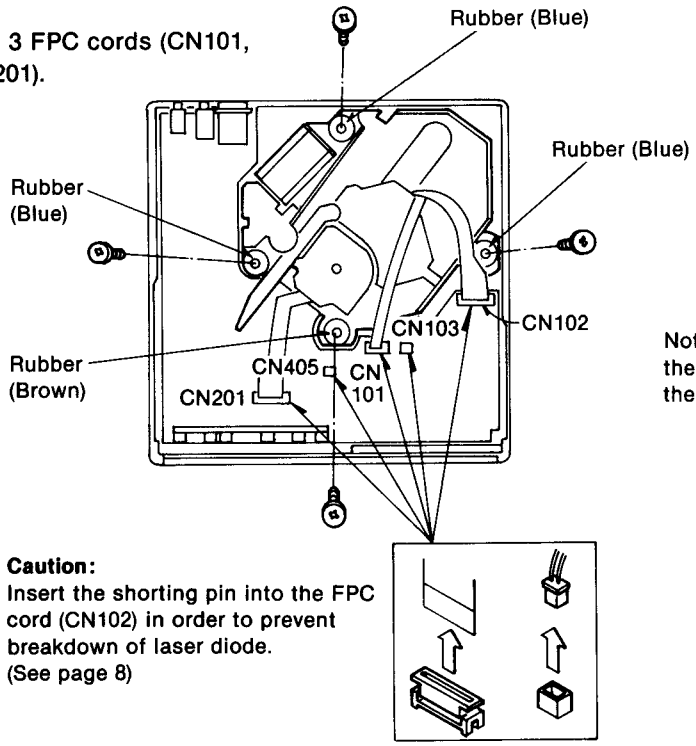

Note the color of each rubber, they must be reinstalled in their original position.

Caution:
Insert the shorting pin into the FPC cord (CN102) in order to prevent breakdown of laser diode.
(See page 8)

■ WIRING DIAGRAM

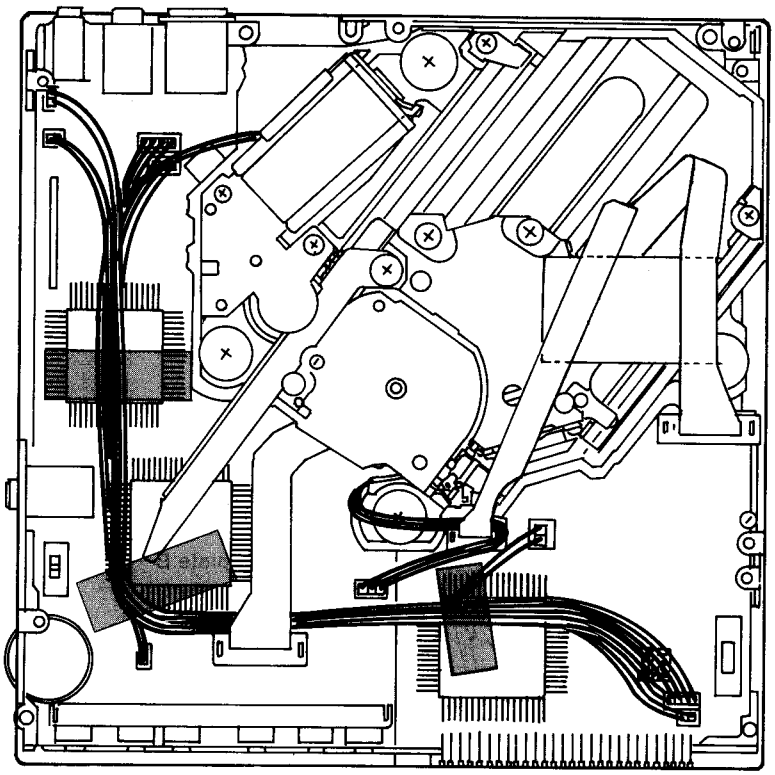

(A view with bottom cover removed)

■ HOW TO REPLACE CHIPS

(Resistor, capacitor and jumper)

- **Removing procedure**

1. Completely remove the solder from both ends of the chip by use of solder sucker.
2. Touch the soldering iron to the end of the chip as shown in Fig. 1, then turn the tweezers in the direction of the arrow.

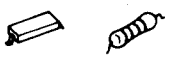

Without color cord With color cord

Chip resistor

Do not re-use chip resistor or capacitor without color cord.

- **Replacing procedure**

1. Place solder on the foil where the chip is fitted. Then solder the chip by holding the soldering iron as shown in Fig. 2.

Note:

1. If the chip jumper is removed, connect a coated lead wire to the part. (See Fig. 3).
   Chip jumper is marked with "J" on the printed circuit board.

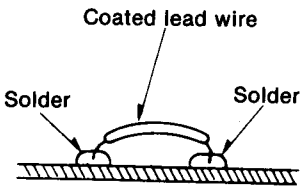

Fig. 3

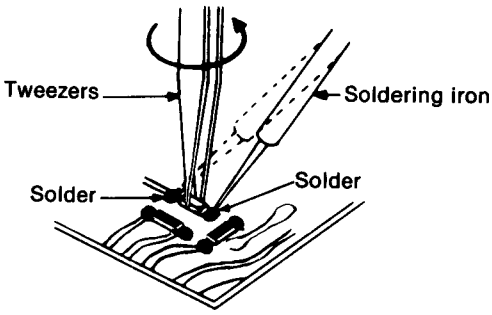

Fig. 1

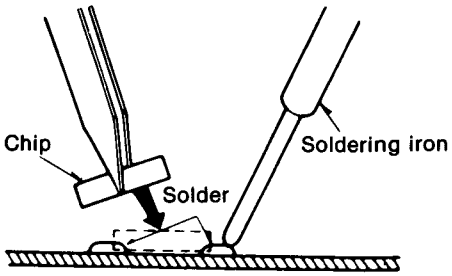

Fig. 2

- **Note for replacing chips**

1. Do not heat the chip more than 3 seconds.
2. Do not rub the electrode against the chip.
3. Use the tweezers with care not to damage the surface of the chip.
4. It is desirable to use a pencil type soldering iron. And use soldering iron less than 60W.

■ HOW TO REPLACE IC'S (Small outline type)

	Replacing procedure		Cautions
1	Reduce the amount of solder on each pin of the integrated circuit by use of a solder sucker.	(Example) H–130 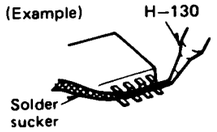	• Recommended tool .....Special soldering iron * H605M and H-130. * H605E and H-130. • Do not touch the soldering iron to the area for a long time. It may otherwise cause removal of the print foil. • When shifting the pin upward, do the job quickly while the solder is melting. If the solder is hard, it may cause removal or breakage of the print foil. • When using a pencil type soldering iron. 1. Completely remove the solder from each IC pin by use of solder sucker. 2. Raise each pin by means of an eyeleteer, hold the pliers then remove IC package from P.C.B.
2	Melt the solder on the pin (one electrode) with the soldering iron.		
3	While the solder is melting, shift the pin upward by the soldering iron to remove it from the foil.	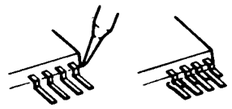	
4	Remove each pin from the foil according to the above-mentioned procedure.	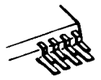	

*** Special soldering iron**
(Refer to Technical Information, ORDER NO. GAD84125486T1)...For U.S.A. and Canada
(Refer to Technical Information, ORDER NO. GAD84115476T8)...For others

•H–605 Spot Heater (hot-air solder iron)

This device that uses hot air to melt solder was developed to remove Flat-Package ICs, RHCs and chip parts.

•H–605M (For 120V power source)
•H–605E (For 200V/220V/240V power source)

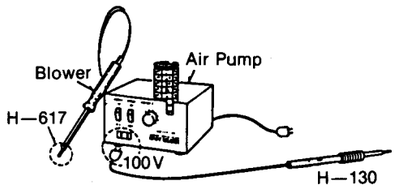

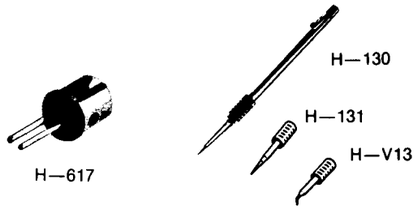

•H–617 Twin Nozzle (for spot heater)

Special nozzle for the removal of RHCs and chip resistors. (Nozzle diameter: 1.0mm×2)

•H–130 Slim Pencil Solder Iron

An ultrasmall ceramic heater solder iron is extremely handy for soldering chip parts, RHCs, ICs etc., to high-density circuit boards.

Features:

•Rated power:	100V, 15W
•Max. temp.:	400°C
•Heater:	ceramic (long life)
•Insulation resistance:	100MΩ
•Length:	178mm
•Weight:	16g (not including cord)

•H–131, H–V13 Cap Bits

Solder tip for the slim pencil Solder Iron and is composed of a bit holder and a corrosion resistance solder tip.

Permits changing of solder tips even while still hot.

•Solder tip: 0.3mm

■ RESISTORS AND CAPACITORS

Notes: * Important safety notice:
Components identified by ⚠ mark have special characteristics important for safety. When replacing any of these components use only manufacturer's specified parts.
* Bracketed indications in Ref. No. columns specify the area.
Parts without these indications can be used for all areas.

Numbering System of Resistor

Example

ERD	25	F	J	102
Type	Wattage	Shape	Tolerance	Value

ERX	2	AN	J	471
Type	Wattage	Shape	Tolerance	Value 47x10¹ (ohm)

Numbering System of Capacitor

Example

ECKD	1H	102	Z	F
Type	Voltage	Value	Tolerance	Peculiarity

ECEA	50	M	330
Type	Voltage	Peculiarity	Value (33x10° microfarad)

Resistor Type	Wattage	Tolerance
ERD : Carbon ERG : Metal Oxide ERX : Metal Film ERQ : Fuse Type Metal ERD□ L : Carbon (chip) ERO□ K : Metal Film (chip) ERC : Solid	10 : 1/8W 12 : 1/2W 25 : 1/4W 1A : 1W 18 : 1/8W S2 : 1/4W S1 : 1/2W 2F : 1/4W 50 : 1/2W 2A : 2W	J : ±5% F : ±1% G : ±2% K : ±10%

Capacitor Type	Voltage	Tolerance
ECE : Electrolytic ECCD : Ceramic ECKD : Ceramic ECQM : Polyester ECQP : Polyproylene ECG : Ceramic ECEA□□□N: Non Polar Electrolytic QCU□ : Ceramic (Chip Type) ECUX : Ceramic (Chip Type) ECF : Semiconductor EECW : Liquid electrolyte double layer capcitor	0J : 6.3V 1A : 10V 1C : 16V 1E : 25V 1H : 50V 1V : 35V 50 : 50V 05 : 50V 2H : 500V 2A : 100V 1 : 100V KC: 400V AC KC: 125VAC (UL) 1J : 63V	C : ±0.25pF J : ±5% K : ±10% Z : +80% –20% P : +100% –0% M : ±20% D : ±0.5pF G : ±2%

Ref. No.	Part No.	Part Code
RESISTORS		
R101	ERJ6GEYJ102V	
R102	ERJ6GMYJ102W	001 151 6307 0
R103	ERJ6GEYJ822V	001 151 6306 1
R104	ERJ6GMYJ682W	001 151 6312 3
R105, R106	ERJ6GEYJ222V	
R107	ERJ6GEYJ682V	001 151 6305 2
R108	ERJ6GEYJ822V	001 151 6306 1
R109	ERJ6GEYJ154V	001 151 6294 8
R110, R111	ERJ6GEYJ222V	
R112	ERJ8GEYJ100V	001 151 6315 0
R113, R114	ERJ6GMYJ102W	001 151 6307 0
R115	ERJ6GEYJ102V	
R116	ERJ6GEYJ223V	001 151 4770 9
R117	ERJ6GEYJ472V	001 151 6302 5
R118	ERJ6GEYJ332V	001 151 6300 7
R119	ERJ8GEYJ154V	001 151 6316 9
R131, R132	ERJ6GEYJ472V	001 151 6302 5
R133	ERJ6GEYJ222V	
R134	ERJ6GEYJ473V	001 151 6303 4
R135	ERJ6GEYJ681V	001 151 6304 3
R136	ERJ6GEYJ223V	001 151 4770 9
R137	ERJ6GEYJ124V	001 151 6293 9
R138, R139	ERJ8GCYJ2R7W	001 151 6314 1
R140	ERJ6GEYJ223V	001 151 4770 9
R141	ERJ6GEYJ681V	001 151 6304 3
R142	ERJ6GEYJ473V	001 151 6303 4
R143	ERJ6GEYJ222V	
R144	ERJ6GEYJ152V	001 151 4769 2
R145	ERJ6GEYJ224V	001 151 6297 5
R146	ERJ6GEYJ104V	001 151 6292 0
R147	ERJ6GMYJ334W	001 151 6308 9
R148	ERJ6GEYJ183V	
R149	ERJ6GMYJ473W	001 151 6309 8
R150	ERJ6GEYJ473V	001 151 6303 4
R151	ERJ6GEYJ472V	001 151 6302 5
R152	ERJ6GEYJ473V	001 151 6303 4
R251	ERJ6GMYJ562W	001 151 6310 5
R252	ERJ6GMYJ473W	001 151 6309 8
R253	ERJ6GMYJ683W	001 151 6313 2
R254	ERJ6GMYJ473W	001 151 6309 8
R255	ERJ6GMYJ563W	001 151 6311 4
R256	ERJ6GEYJ223V	001 151 4770 9
R257	ERJ8GEYJ2R2V	001 151 6317 8
R303	ERJ6GEYJ152V	001 151 4769 2
R304	ERJ6GEYJ561V	001 151 4772 7
R401, R402	ERJ6GEYJ222V	
R403	ERJ6GEYJ222V	
R404, R405	ERJ6GEYJ472V	001 151 6302 5
R407, R408	ERJ6GEYJ472V	001 151 6302 5
R409, R410	ERJ6GEYJ102V	
R411	ERJ6GEYJ102V	
R413, R414	ERJ6GEYJ103V	001 151 6291 1
R415	ERJ6GEYJ102V	
R451	ERDS2TJ152	001 152 2350 8
R704	ERJ6GEYJ274V	001 151 6298 4
R705	ERJ6GEYJ223V	001 151 4770 9
R801, R802	ERJ6GEYJ4R7V	001 151 6301 6
R803, R804	ERJ6GEYJ162V	001 151 6295 7
R805, R806	ERJ6GEYJ152V	001 151 4769 2
R807, R808	ERJ6GEYJ102V	
R809, R810	ERJ6GEYJ102V	
R811, R812	ERJ6GEYJ331V	001 151 6299 3
R817, R818	ERJ8GEYJ390V	001 151 6318 7
R821	ERJ6GMYJ473W	001 151 6309 8
R822	ERJ6GEYJ473V	001 151 6303 4
R832, R833	ERJ6GEYJ102V	
R906	ERJ6GEYJ222V	
R907, R908	ERJ6GEYJ332V	001 151 6300 7
CAPACITORS		
C102	RCUV1H222KB	001 103 8694 8
C103	RCUV1H102K	001 103 8689 5
C104	RCUX1H102K	001 103 8700 7
C105	RCUV1H681K	001 103 8698 4
C106, C107	RCUV1H102K	001 103 8689 5
C108	ECEA1AKS470	001 120 3073 4
C109	RCUV1H220KC	001 103 8693 9
C110, C111	RCUV1H271KC	001 103 8695 7
C112	RCUV1E104ZF	001 103 7066 4
C113	ECEA0JKS101I	001 120 5506 2
C114	ECEA1HSN010L	001 120 4659 0
C115, C116	RCUV1E104ZF	001 103 7066 4
C117	RCUV1H681K	001 103 8698 4
C118	ECEA0JSN220I	001 120 4655 4
C119	ECEA1HKS010L	001 120 4799 9
C120	RCUV1H471KC	001 103 7070 8
C121	ECUV1E333MB	001 103 8683 1
C122	RCUV1H682KB	001 103 7071 7
C123	RCUV1H182KB	001 103 8692 0
C124	ECSE1VY334R	001 123 1152 9
C125	RCUV1E104ZF	001 103 7066 4
C128, C129	RCUV1H102KB	001 103 8329 6
C141	ECUV1E333MB	001 103 8683 1
C142	ECEA1HSNR47L	001 120 5649 8
C143	RCUV1E183KB	
C144	RCUV1H392KB	001 103 8696 6
C145	RCUV1E223KB	001 103 8688 6
C146	RCUV1E153KB	001 103 7156 3
C147	RCUV1H561KB	001 103 8697 5
C148	RCUV1H822KB	001 103 8699 3
C149	ECEA1ESN3R3I	001 120 4658 1
C150	ECUV1E223KB	001 103 8682 2
C151	RCUV1H152KB	001 103 8691 1
C152	ECUV1E333KB	001 103 6707 8
C153	ECEA1ESN3R3I	001 120 4658 1
C154	ECUV1E223KB	001 103 8682 2
C155	ECSE1ET155R	001 123 1151 0
C156	ECSE1AT225SR	001 123 1150 1
C157	ECSE0JT336	001 123 1146 7
C158	ECUV1H473KB	001 103 8685 9
C159	ECSE0JT336	001 123 1146 7
C251	RCUV1E104ZF	001 103 7066 4
C252	ECUX1H152KB	001 103 8686 8
C253	ECUX1E273KB	001 103 5425 9
C254	ECUV1E223KB	001 103 8682 2
C255	ECSE1CY474R	
C256	ECEA1CKS330I	001 120 5647 0
C257	RCUX1E104ZF	001 103 5655 7
C258	ECEA1CSN220L	001 120 5648 9
C259	ECEA1CSN220I	
C260	ECEA1CSN220L	001 120 5648 9
C301	ECEA1VSN2R2I	001 120 5108 2
C302	RCUX1H103ZF	001 103 5685 1
C303	RCUV1H220KC	001 103 8693 9
C304	RCUV1H070DC	
C306	RCUV1H103ZF	001 103 8690 2
C308	ECUV1C105ZF	001 103 7118 9

Ref. No.	Part No.	Part Code	Ref. No.	Part No.	Part Code	Ref. No.	Part No.	Part Code
C309, C311	RCUV1E104ZF	001 103 7066 4	C708	ECUV1H182KC	001 103 8684 0	C807, C808	ECEA0JSN220L	001 120 5646 1
C351	RCBS1H6R8KLY	001 103 5639 7	C709, C710	RCUV1E104ZF	001 103 7066 4	C809, C810	ECUV1H473KB	001 103 8685 9
C401	RCUV1H103ZF	001 103 8690 2	C711	ECSE1CT106R		C813	RCUV1H103ZF	001 103 8690 2
C402, C451	RCUV1E104ZF	001 103 7066 4	C712	ECEA0JKS2201	001 120 5645 2	C814, C815	RCUV1E104ZF	001 103 7066 4
C701, C702	ECSF1AE226		C714	ECEA0JKS1011	001 120 5506 2	C816, C817	ECSE1AT105R	001 123 1148 5
C703	ECSE0JT225SR		C715, C716	RCUV1E104ZF	001 103 7066 4	C818	RCUV1E104ZF	001 103 7066 4
C704	ECSE09T225R5	001 123 1147 6	C717	ECEA0JKS1011	001 120 5506 2	C819, C820	ECUV1H102KC	001 103 6755 0
C705	ECSE1AT155R	001 123 1149 4	C801, C802	ECEA0JKS4701	001 120 5507 1	C821, C822	ECSE0GT106R	
C706, C707	ECSE0JT225SR		C805, C806	RCUV1H331KC	001 103 6733 6	C824	RCBS1H221KBY	001 103 5603 9

■ INTERNAL CONNECTIONS OF LCD (Liquid Crystal Display)

• Common connection diagram

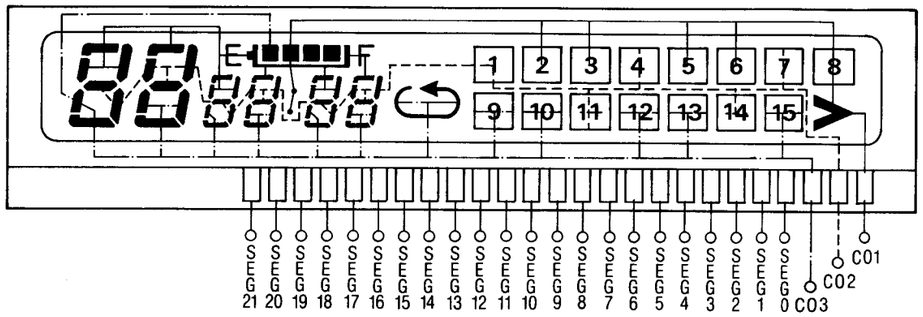

• Segment connection diagram

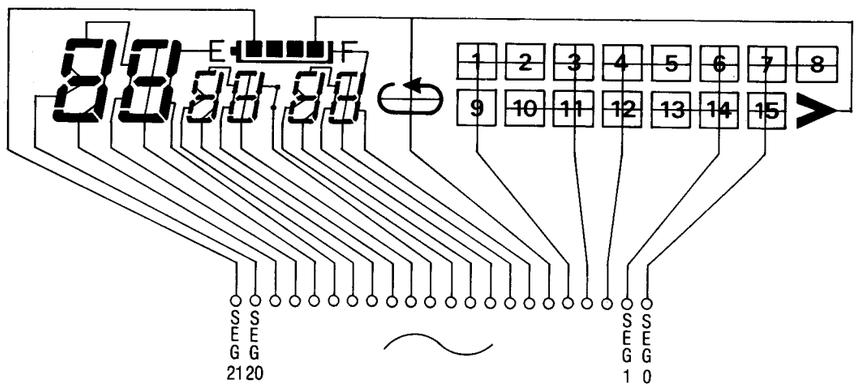

■ TROUBLE SHOOTING

Note: 1. Carefully handle the compact disc because stain, dust or warping may cause generation of noise.
2. If the optical pickup lens is stained, it may sometime cause sound skip of failure of performance.
Refer to "CLEANNING OF LENS (page 8)".

• Check points (Parts side)

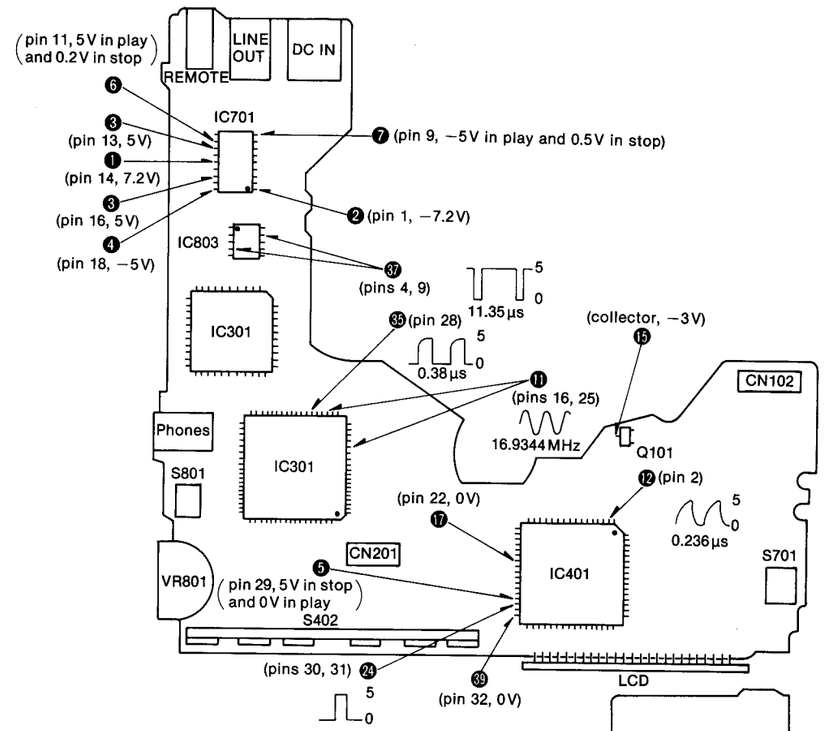

• Check points (Solder side)

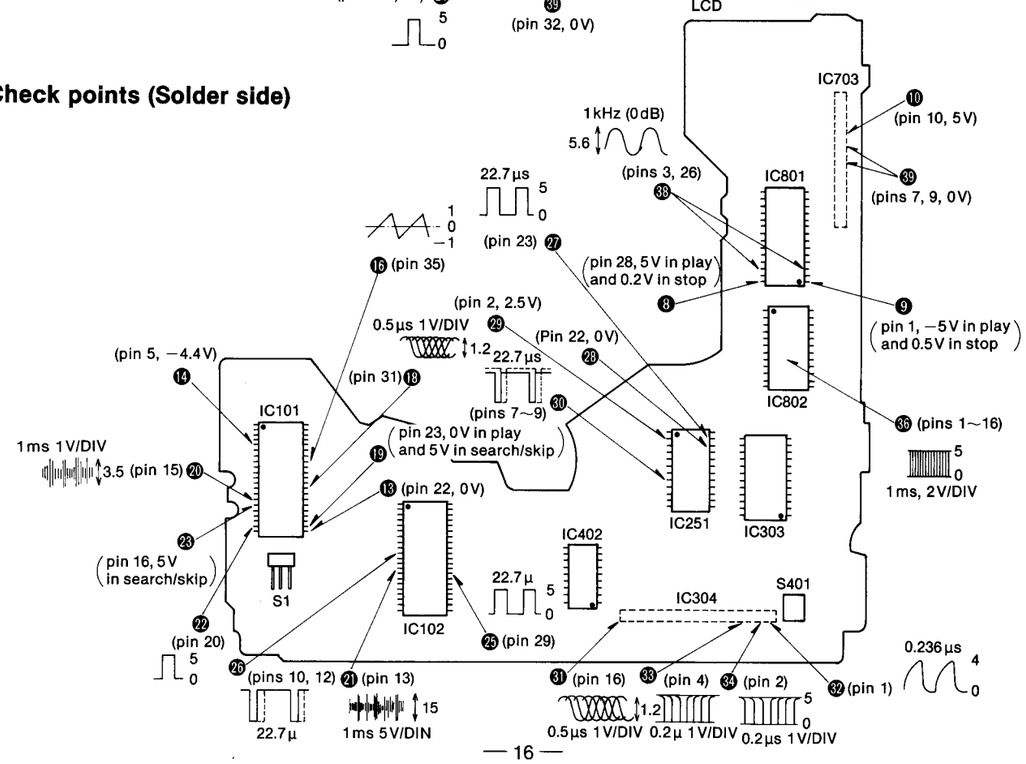

• Check the power supply circuit

❶ Check the voltage of IC701, pin 14...7.2V — NO → S701, IC702, Q708, D702 defective

YES ↓

❷ Check the voltage of IC701, pin 1...−7.2V — NO → S701, IC702, Q708 defective

YES ↓

❸ Check the voltage of IC701, pins 13 and 16...5V — NO → IC701, IC703 defective

YES ↓

❹ Check the voltage of IC701, pin 18...−5V — NO → IC701, IC703 defective

YES ↓

❺ Check the power save signal (IC401, pin 29)..."5V" in stop and "0V" in play. — NO → IC401, IC701, IC801 defective

YES ↓

❻ Check the voltage of IC701, pin 11..."5V" in play and "0.2V" in stop. — NO → IC701, Q705 defective

YES ↓

❼ Check the voltage of IC701, pin 9..."−5V" in play and "0.5V" in stop. — NO → IC701, Q706 defective

YES ↓

❽ Check the voltage of IC801, pin 28..."5V" in play and "0.2V" in stop. — NO → IC801, IC703 defective

YES ↓

❾ Check the voltage of IC801, pin 1..."−5V" in play and "0.5V" in stop. — NO → IC801, IC703 defective

• Check the focus servo

Check the power supply circuit.

YES ↓

❿ Reset signal is "H (5V)" ? (IC703, pin 10) — NO → IC703 defective

YES ↓

⓫ Clock is oscillating (16.9344MHz) ? (IC301, pins 16 and 25) — NO → X301, IC301, IC302 defective

YES ↓

⓬ Clock is oscillating (4.2336MHz) ? (IC401, pin 2) — NO → IC301, IC401 defective

YES ↓

⓭ Focus ON signal level is "L (0V)" ? (IC101, pin 22) — NO → IC101, IC401 defective

YES ↓

⓮ Laser APC signal level is "L (−4.4V)" ? (IC101, pin 5) — NO → IC101 defective

YES ↓

⓯ Laser APC signal level is "L (−3V)" ? (Q101 collector) — NO → S1, Q101, IC101 defective

YES ↓

⓰ Focus search signal (triangular wave) is emitted ? (IC401, pin 35) — NO → IC101 defective

YES ↓

⓱ Focus OK signal is "L (0V)" ? (IC401, pin 22) — NO → IC101, IC401 defective

YES ↓

Focus lens moves up and down for a few seconds ? (Not needed to set the disc) — NO → IC101, IC102, Pickup defective

YES ↓

⓲ RF signal is emitted ? (IC101, pin 31) — NO → IC101, Pickup defective

Ⓐ

• Check the tracking servo

Ⓐ

⓳ Check the TRON signal (IC101, pin 23)..."L" in play and "H" in search/skip. — NO → IC101, IC401 defective

YES ↓

⓴ Tracking error signal is emitted ? (IC101, pin 15) — NO → IC101, IC102 defective

YES ↓

㉑ Tracking coil drive signal is emitted ? (IC102, pin 13) — NO → IC101, IC102 defective

YES ↓

㉒ Track jamp pulse is emitted during search/skip ? (IC101, pin 20) — NO → IC401, IC101 defective

YES ↓

㉓ Check the tracking hold signal (IC101, pin 16)..."H" in search/skip. — NO → IC101, IC102 defective

• Check the traverse servo

㉔ Kick pulse is emitted in skip mode ? (IC401, pins 30, 31) — NO → IC401 defective

YES ↓

㉕ Clock signal is emitted ? (IC102, pin 29) — NO → IC301, IC102 defective

YES ↓

㉖ Traverse motor drive signal is emitted ? (IC102, pins 10, 12) — NO → IC102, Motor defective

• Check the spindle motor drive

㉗ Clock signal is emitted ? (IC251, pin 23) — NO → IC301, IC251 defective

YES ↓

㉘ Spindle motor ON signal is "L (0V)" ? (IC251, pin 22) — NO → IC301, IC251 defective

YES ↓

㉙ Standard voltage is 2.5V ? (IC251, pin 2) — NO → IC251, R252, R254 defective

YES ↓

㉚ Spindle motor drive signal is emitted ? (IC251, pins 7~9) — NO → IC251, Spindle Coil P.C.B. defective

• Check the digital and audio

㉛ RF signal is emitted ? (IC304, pin 16) — NO → IC101, IC304 defective

YES ↓

㉜ PCK signal is emitted ? (IC304, pin 1) — NO → IC304, IC301 defective

YES ↓

㉝ SRF signal is emitted ? (IC304, pin 4) — NO → IC304, IC301 defective

YES ↓

㉞ EFM signal is emitted ? (IC304, pin 2) — NO → IC304, IC301 defective

YES ↓

㉟ Serial data beat clock is emitted ? (IC301, pin 28) — NO → IC301 defective

YES ↓

㊱ Data signal is emitted ? (IC802, pins 1~16) — NO → IC301, IC302, IC802 defective

YES ↓

㊲ Deglitch signal is emitted ? (IC803, pins 4, 9) — NO → IC302, IC803 defective

YES ↓

㊳ AF signal is emitted ? (IC801, pins 3, 26) — NO → IC802, IC803, IC801 defective

YES ↓

㊴ Muting signal level is "L (0V)" ? (IC401, pin 32 and IC703, pins 7, 9) — NO → IC401, IC703 defective

■ TERMINAL FUNCTION OF LSI

• AN8370S (Optical Servo Control)

Pin No.	Mark	I/O Devision	Function
1	VEE	I	Power supply (connected to −5V)
2	LSA	I	Phase difference input (A)
3	GND	I	GND terminal
4	LSB	I	Phase difference input (B)
5	APC	O	Auto laser power control output
6	TEOUT	O	Tracking error signal output
7	TEG	I	Tracking error gain adjusting input
8	TE−	I	Phase difference-voltage conversion (−)
9	TE +	I	Phase difference-voltage conversion (+)
10	APC −	O	Laser power inversion input
11	C·MEM	I	Capacitor connection for phase difference memory
12	APC +	I	Laser power non-inversion input
13	VREF	O	Reference current generation
14	SENSE	O	Selector output (track-crossed)
15	HIN	I	Tracking hold circuit input
16	HOUT	O	Tracking hold circuit output
17	SPCNT	O	Track-cross speed control output (not used, grounded)
18	C·MSP	I	Track-cross reference speed setting capacitor connection (not used, grounded)
19	C·AF	I	Auto focus timer capacitor connection
20	KICK R/$\overline{F}$	O	Track kick signal output
21	VCC	I	Power supply (connected to +5V)
22	CNT1	I	Control input ($\overline{FOON}$: Focus servo ON signal)

Pin No	Mark	I/O Devision	Function
23	CNT2	I	Control input ($\overline{TRON}$: Tracking servo ON signal)
24	CNT3	I	Control input (KICKF : Kick direction [forward] command)
25	CNT4	I	Control input (KICKR : Kick direction [reverse] command)
26	$\overline{F\cdot LOCK}$	O	Focus lock signal output
27	C·FBDO	O	Capacitor connection for inversion RF high speed detection
28	C·SBDO	O	Capacitor connection for inversion RF low speed detection
29	C·SBRT	O	Capacitor connection for non-inversion RF low speed detection
30	C· FBRT	O	Capacitor connection for non-inversion RF high speed detection
31	RF OUT	O	RF signal output
32	BDO	O	Drop-out detection output
33	RFIN	I	RF signal input
34	S·OUT	O	Focus search signal output
35	C·LW	I	Capacitor connection for triangular wave generation
36	FE·OUT	O	Focus error signal output
37	FEG	I	Focus error gain adjusting input
38	FE·REF	I	Focus error comparison voltage generation
39	PDB	I	Photo detector current input (B)
40	IVB	O	Current/voltage conversion output (B)
41	IVA	O	Current/voltage conversion output (A)
42	PDA	I	Photo detector current input (A)

• MN1550PDL (Remote Control Signal Processing)

Pin No.	Mark	Signal	I/O Devision	Function
1	VDD	——	I	Power supply (connected to +5V)
2	OSC	SMCK	I	Clock input
3	P23	——	——	——
4	P22	——	——	——
5	RST	RESET	I	Reset signal input
6	P21	——	——	——
7	P20	——	——	——
8	IRQ	——	I	Remote control signal input

Pin No.	Mark	Signal	I/O Devision	Function
9	P31	——	O	Clock output
10 ~ 13	P10 ~ P13	Data	I	Key strobe
14 ~ 17	P00 ~ P03	Data	I	Key strobe
18	VSS	GND	I	GND terminal

• MN6617S (Digital Signal Processing: EFM Decoder, Error Correction, CLV Servo)

Pin No.	Mark	I/O Devision	Function
1	BLKCK	O	Sub-code block (Q data) clock (75 Hz)
2	$\overline{CLDCK}$	O	Sub-code frame (Q data) clock (7.35 kHz)
3	$\overline{SUBQ}$	O	Sub-code (Q data) output
4	CRC	O	Sub-code (Q data) CRC check (Not used, open)
5	$\overline{RST}$	I	Reset signal input (reset at "L")
6	MLD	I	Command load input
7	MCLK	I	Command clock input
8	MDATA	I	Command data input
9	DMUTE	I	Muting control (muting ON at "H")
10	$\overline{TRON}$	I	Tracking servo ON signal (tracking servo ON at "L")
11	STAT	O	Processing condition (CRC, OTC, CLVOK, TT STOP) output
12	SMCK	O	Clock output (4.2336 MHz)
13	PMCK	O	Pitch control clock output (Not used, open)
14	ITC	I	Track counter input signal (Not used, connected to +5V)
15	$\overline{TEST}$	I	Test mode selection (Not used, connected to +5V)
16	X2	O	Clock output (16.9344MHz)
17	X1	I	Clock input (16.9344 MHz)
18	SEL	I	DA output parallel/serial selection (serial at "L")
19	LDG/WDCK	O	L channel deglitch signal/serial data word clock.
20	RDG	O	R channel deglitch signal.
21	DEMPH	O	De-emphasis ON signal (de-emphasis ON at "H")
22	IPFLAG	O	Interpolation flag (interpolation at "H")
23	FLAG0	O	Error flag (error at "H")
24	FLAG6	O	16 K RAM address reset signal (reset at "H")
25	XCK	O	Clock (16.9344MHz) output (Not used, open)
26	DA15/ SRDATA	O	16-bit data output/serial data output (MSB first)
27	DA14/ SRDATAX	O	16-bit data output/serial data output (LSB first)
28	DA13/SRCK	O	16-bit data output/serial data beat clock.
29	DA12/WDCK	O	16-bit data output/serial data word clock (Not used)
30	DA11/ BYTCK	O	16-bit data output/serial data byte clock (Not used)
31	GND	I	GND terminal
32	DA10/RIL	O	16-bit data output/RIL signal
33	DA9/RESY	O	16-bit data output/ Resynchronizing signal

Pin No.	Mark	I/O Devision	Function
34	DA8/FCLV	O	16-bit data output/Synchronizing detection signal (Not used)
35	DA7/ IPBYTE	O	16-bit data output/Interpolation flag for each byte (Not used)
36	DA6/IPSEL	I/O	16-bit data output/ interpolation inhibit (Not used)
37	DA5/FLAG5	O	16-bit data output/C2 decoder correction flag 3 (Not used)
38	DA4/FLAG4	O	16-bit data output/C2 decoder correction flag 2 (Not used)
39	DA3/FLAG3	O	16-bit data output/C2 decoder correction flag 1 (Not used)
40	DA2/FLAG2	O	16-bit data output/C1 decoder correction flag 2 (Not used)
41	DA1/FLAG1	O	16-bit data output/C1 decoder correction flag 1 (Not used)
42	DA0/FLCK0	O	16-bit data output/Crystal frame clock
43 ~ 50	D7 ~ D0	I/O	16 K RAM data output
51	RAMOE	O	16 K RAM $\overline{OE}$ signal
52	RAMWE	O	16 K RAM $\overline{WE}$ signal
53 ~ 63	RAMA 0 ~ RAMA10	O	16 K RAM address signal (RAMA0 : LSB, RAMA10: MSB)
64	PC	O	Spindle motor ON signal (ON at "L")
65	EC	O	Spindle motor drive signal
66	FG	I	Spindle motor FG signal input
67	——	——	——
68	——	——	——
69	——	——	——
70	——	——	——
71	——	——	——
72	PCK	I	PLL extract clock input
73	VDD	I	Power supply (connected to +5V)
74	EFM	I	EFM signal input (PLL)
75	SRF	I	EFM signal input (DSL)
76	DO	I	Drop-out signal (Drop-out at "H")
77	CLVS	O	11T servo OK signal (OK at "H")
78	FPC	O	PLL frequency comparision signal
79	BSSEL	O	PLL frequency in take operation signal.
80	——	——	——
81	——	——	——
82	——	——	——
83	SUBC	O	Sub-code serial output data
84	SBCK	I	Clock for sub-code serial output

• MN6618 (Digital Filter)

Pin No.	Mark	I/O Device	Function
1	———	——	———————
2	D012	O	16-bit parallel deta output
3	D011/SCK	O	16-bit parallel data output/ serial output bit clock
4	D010/SOUT	O	16-bit parallel data output/ serial output data
5	GND	I	GND terminal
6	D09	O	16-bit parallel data
7	———	——	———————
8	D08	O	16-bit parallel data
9	D07	O	16-bit parallel data
10	———	——	———————
11	———	——	———————
12	D06	O	16-bit parallel data
13	D05	O	16-bit parallel data
14	D04	O	16-bit parallel data
15	D03/2RLCK	O	16-bit parallel data/RL signal
16	———	——	———————
17	———	——	———————
18	D02/WCK	O	16-bit parallel data/serial output word clock
19	D01	O	16-bit parallel data
20	D00	O	16-bit parallel data (LSB)
21	MDATA	I	Command data input
22	———	——	———————
23	MCLK	I	Command clock input
24	MLD	I	Command load input
25	———	——	———————
26	$\overline{RST}$	I	Reset signal input (reset at "L")
27	VDD	I	Power supply (connected to +5V)
28	LRCK	I	R/L signal
29	———	——	———————
30	SFT	I	Serial data input clock
31	SIN	I	Serial data input
32	———	——	———————
33	X OUT	O	Clock output (Not used)
34	X IN	I	Clock input (16.9344 MHz)
35	OSEL	I	DA output parallel/serial selection. (parallel at "H")
36	LDGL	O	L channel deglitch signal
37	RDGL	O	R channel deglitch signal
38	VDD	I	Power supply (connected to +5V)
39	D015	O	16-bit parallel data (MSB)
40	D014	O	16-bit parallel data
41	———	——	———————
42	D013	O	16-bit parallel data

• AN8290S (Spindle Motor Drive)

Pin No.	Mark	I/O Devision	Function
1	GND	I	Minimum potential of IC control. (In this unit, it is connected to VEE [−8.5V])
2	DCR	I	Standard voltage of FAI, PC, CLK. (In this unit, it is connected to 2.5V.)
3	FAI	I	Torque command filter amp. input. (Normar rotation command when FAI < DCR.)
4	FAO	O	Filter amp. output.
5	DI	I	Absolute value circuit input.
6	LPF	I	Capacitor terminal for low pass filter of current feedback loop.
7	A1	O	Drive signal output.
8	A2	O	
9	A3	O	
10	PGND	I	Minimum potential of IC power. (In this unit, it is connected to VEE [−8.5V])
11	CS	I	Drive current detection resistor terminal.
12	PVCC	I	Power input for IC power.
13	H3−	I	Not used in this unit.
14	H3+	I	
15	H2−	I	Negative output of Hall element is input.
16	H2+	I	Positive output of Hall element is input.
17	H1−	I	Negative output of Hall element is input.
18	H1+	I	Positive output of Hall element is input.
19	HSW	I	Bias switch of Hall element. (OFF when PC > DCR)
20	HB	I	Bias power of Hall element.
21	VCC	I	Power input for IC control.
22	PC	I	Power control. (Power down mode when PC > DCR)
23	CLK	I	Clock input. (DCR standard, operated at the edge of rise.)
24	TC	I	Triangular wave generation capacitor terminal.

• MN15845PDG (System Control)

Pin No.	Mark	Signal	I/O Devision	Function
1	VDD	VDD	I	Power supply (connected to +5V)
2	OSC1	OSC	I	Clock input (4.2336 MHz)
3	OSC 2	——	O	Not used (open)
4	XI	TCNT	I	Track count input (track-cross input in rough search)
5	X0	——	O	Not used (open)
6	$\overline{RST}$	$\overline{RESET}$	I	Reset signal input (reset at "L")
7	$\overline{SYNC}$	——	O	Not used (open)
8	$\overline{IRQ}$	BLKCK	I	Q data read-in timing strobe signal input (sub-code block clock : 75 Hz)
9	$\overline{SIRQ}$	——	I	Not used. (connected to VDD)
10	$\overline{SBI}$	$\overline{SUBQ}$	I	Q data read-in input (sub-code Q code)
11	$\overline{SBO}$	——	O	Not used (open)
12	$\overline{SBT}$	$\overline{CLDCK}$	I	Q data read-in data strobe signal input (sub-code block clock : 7.35 kHz)
13 ~ 16	P40 ~ P43	——	I	Key input
17	P00	MCLK	I/O	Key input strobe and data clock output
18	P01	MDATA	I/O	Key input strobe and data output
19	P02	STROBE	I/O	Key input strobe signal
20	P03	MLD	O	Data strobe signal output (signal processing LSI command load output)
21	P10	SENSE	I	Optical servo status (track-cross) input
22	P11	$\overline{FLOCK}$	I	Optical servo status (focus) input.
23	P12	BATT	I	Battery voltage detection signal input
24	P13	STAT	I	Processing status input from signal processing LSI
25	P20	CNT4	O	Optical servo IC control signal (KICKR : Kick direction [revers] command)
26	P21	CNT3	O	Optical servo IC control signal (KICKF : Kick direction [forward] command)
27	P22	CNT2	O	Optical servo IC control signal ($\overline{TRON}$: Track servo)
28	P23	CNT1	O	Optical servo IC control signal ($\overline{FOON}$: Focus servo)
29	P30	POWER	O	Power save control (power save at "H")
30	P31	TRFWD	O	Traverse motor forward command signal
31	P32	TRREV	O	Traverse motor revers command signal
32	P33	MUTE	O	Muting control (muting ON at "H")
33	VLCD 1	——	I	LCD drive power supply (3.33V)
34	VLCD2	——	I	LCD drive power supply (1.67V)
35	VLCD3	——	I	LCD drive power supply (0V)
36 ~ 38	COM0 ~ COM2	——	O	LCD common line output
39	COM3	——	O	Not used (open)
40 ~ 44	SEG0 ~ SEG4	——	O	LCD segment line output
45 ~ 47	SEG5 ~ SEG7	——	O	Not used (open)
48 ~ 63	SEG8 ~ SEG23	——	O	LCD segment line output
64	VSS	GND	I	GND terminal.

• EHDGA1245 (Data Slice and PLL)

Pin No.	Mark	I/O Devision	Function
1	PCK	O	Clock output extracted from SRF
2	EFM	O	EFM signal output synchronized with PCK
3	D·GND	I	GND terminal (digital system)
4	SRF	O	RF signal output data-sliced into digital value
5	SLC	I	Slice level control signal input
6	DO	O	Drop-out detection pulse output
7	FPC	I	Frequency comparison error signal input.
8	VCC	I	Power supply (connected to +5V)
9	NC	——	Non connection
10	VR	I	Resistor connection for VCO oscillation frequency
11	VEE	I	Power supply (connected to −5V)
12	VC1	I	Capacitor connection for VCO oscillation frequency
13	VC2	I	Capacitor connection for VCO oscillation frequency
15	A·GND	I	GND terminal (analog system)
16	RF	I	RF signal input

■ EXPLODED VIEW

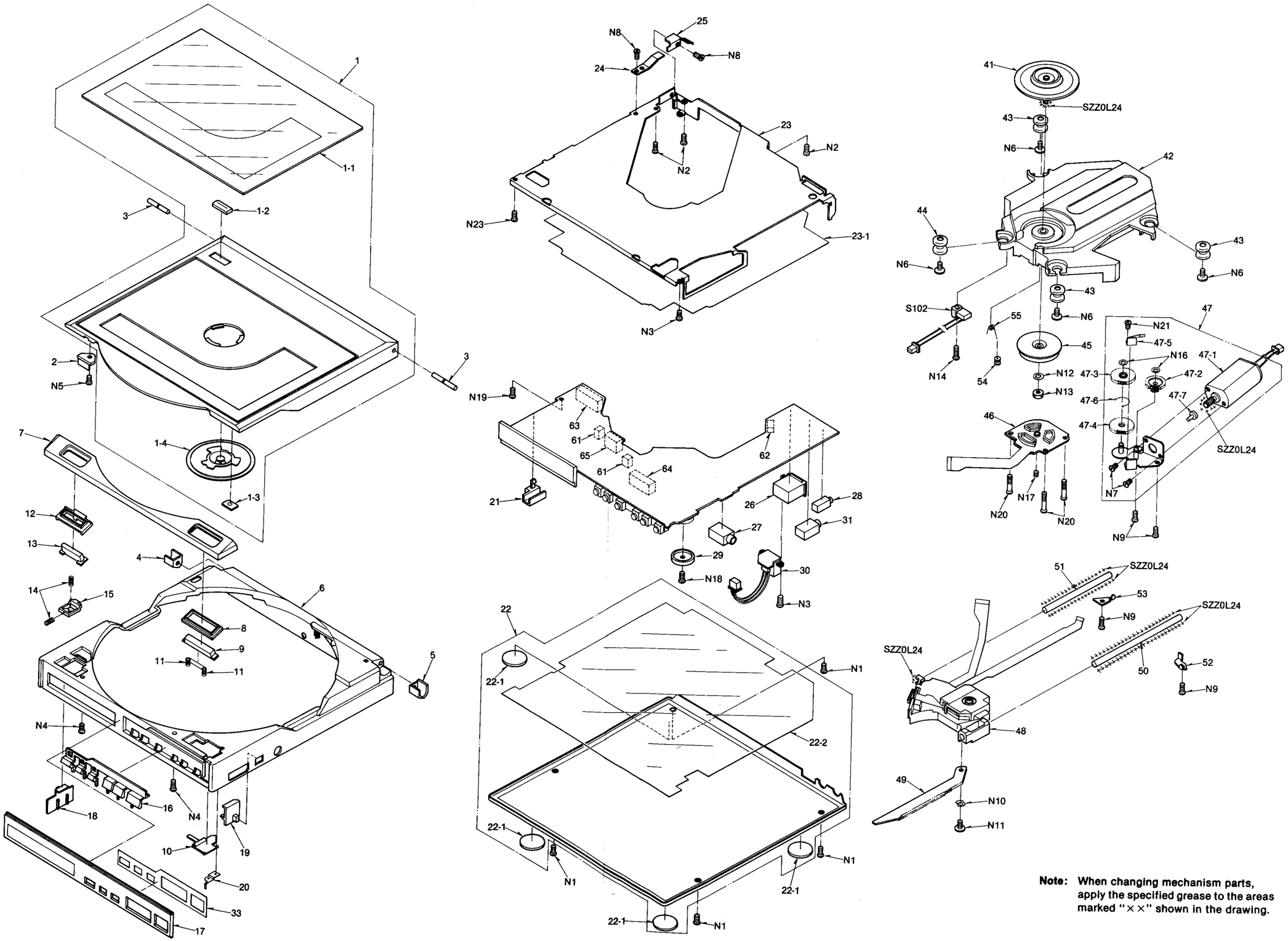

Note: When changing mechanism parts, apply the specified grease to the areas marked "× ×" shown in the drawing.

■ REPLACEMENT PARTS LIST

Notes: * Important safety notice:
Components identified by ⚠ mark have special characteristics important for safety. When replacing any of these components use only manufacturer's specified parts.

* Bracketed indications in Ref. No. columns specify the area.
Parts without these indications can be used for all areas.
* "Ⓢ" mark parts are used for silver type only.
* "Ⓚ" mark parts are used for black type only.
Parts other than "Ⓢ" and "Ⓚ" marked are used for both silver and black types.

Main PCB Board
Part No. SXCP550

Ref. No.	Part No.	Part Code	Description
INTEGRATED CIRCUITS			
IC101	AN8370S	001 060 8399 8	INTEGRATED CIRCUIT
IC102	AN8375S	001 061 3156 0	INTEGRATED CIRCUIT
IC251	AN8290S	001 061 3034 9	INTEGRATED CIRCUIT
IC301	MN6617	001 060 8411 9	INTEGRATED CIRCUIT
IC302	MN6618	001 061 0855 2	INTEGRATED CIRCUIT
IC303	MN4416S-12	001 060 9746 5	INTEGRATED CIRCUIT
IC304	EHDGA1245A	001 061 3395 7	INTEGRATED CIRCUIT
IC401	MN15845PDG	001 061 3160 4	INTEGRATED CIRCUIT
IC402	MN1550PDL		INTEGRATED CIRCUIT
IC701	AN8050S		INTEGRATED CIRCUIT
IC702	EHDRD1253		INTEGRATED CIRCUIT
IC703	EHDRD1254	001 061 3396 6	INTEGRATED CIRCUIT
IC801	AN8376S	001 061 3035 8	INTEGRATED CIRCUIT
IC802	SVIPCM55HP	001 060 8286 6	INTEGRATED CIRCUIT
IC803	MN6636S	001 061 3044 7	INTEGRATED CIRCUIT
IC805, IC806	SVIGA011	001 061 3045 6	INTEGRATED CIRCUIT
TRANSISTORS			
Q101	2SD601-QRSTX	001 030 6065 3	TRANSISTOR
Q401	DTA144EKT96	001 030 6056 4	TRANSISTOR
Q402, Q403	2SB709-QRSTX	001 030 6059 1	TRANSISTOR
Q403	2SB709QRSTX		TRANSISTOR
Q404	DTC114EKT96	001 030 6058 2	TRANSISTOR
Q405	DTB113ZKT96	001 030 6057 3	TRANSISTOR
Q406	DTA114EKT96		TRANSISTOR
Q705	2SB766-QRSTX	001 030 6060 8	TRANSISTOR
Q706	2SD674-QRSTX	001 030 6066 2	TRANSISTOR
Q707	2SD601-QRSTX	001 030 6065 3	TRANSISTOR
Q708	2SD1280STTW	001 030 6063 5	TRANSISTOR
Q901	2SD601-QRSTX	001 030 6065 3	TRANSISTOR
Q902	2SB709-QRSTX	001 030 6059 1	TRANSISTOR
Q903, Q904	2SD1328QRSTX	001 030 6064 4	TRANSISTOR
DIODES			
D101	MA151WKTX	001 032 9272 6	DIODE
D102, D103	MA721TX		DIODE
D251	MA153TX	001 032 7614 2	DIODE
D404, D405	MA151WKTX	001 032 9272 6	DIODE
D406, D407	MA151KTX	001 032 7613 3	DIODE
D702, D703	SVDAK03		DIODE
HALL ELEMENTS			
H501, H502	0H-001	001 036 0010 2	HALL ELEMENT
VARIABLE RESISTORS			
VR101	EVM07SX00B53		VARIABLE RESISTOR
VR102	EVM07SX00B24		VARIABLE RESISTOR
VR103, VR104	EVM07SX00B14		VARIABLE RESISTOR
VR105	EVM07SX00B14		VARIABLE RESISTOR
VR106	EVM07SX00B53		VARIABLE RESISTOR
VR301	EVM07SX00B52		VARIABLE RESISTOR
VR701	EVM07SX00B15		VARIABLE RESISTOR
VR801	EVUBPAT50A24	001 174 8801 6	VARIABLE RESISTOR
COILS AND TRANSFOMERS			
L101	SLQDT4151	001 211 3301 5	COIL
L251	SLQDNL100KT	001 211 3300 6	COIL
L804	ELEPH2R2KA		COIL
L805, L806	SLQDNL100KT	001 211 3300 6	COIL
L807, L808	SLQDMLF1R0KT	001 211 3382 8	COIL
L809	SLQDMLF1R0KT	001 211 3382 8	COIL
OSCILLATORS			
X301	SVQAT1693	001 250 1505 4	16.9344MHZ
DISPLAYS			
LCD40	EDD062C71A3P	001 080 0328 3	DISPLAY
SWITCHS			
S1 ⚠	SSPD4	003 434 1033 7	SWITCH, LASER
S101	SSHD1-1	003 435 4950 2	SWITCH, REST
S401	EVQQFT02K-1		SWITCH, PLAY/PAUSE
S402	SSGD3		SWITCH, OPERATION
S701, S801	ESD10909	003 431 3658 7	SWITCH, POWER/FILTER

Ref. No.	Part No.	Part Code	Description
CABINET AND CHASSIS			
1 Ⓚ	SGDLXP5-KM	016 820 0586 8	DUST COVER ASS'Y
1 Ⓢ	SGDLXP5-SM	016 820 0585 9	DUST COVER ASS'Y
1-1	SGULXP5-SM	016 842 1521 9	ORNAMENT PANEL
1-2	SGBD1	016 863 0268 0	BADGE
1-3	SHGD15	016 653 1015 5	CUSHIONT RUBBER
1-4	SDOD16-1A	016 766 0211 9	CLAMPER
2	SSED9		HOOK
3	SUXD38	016 634 0138 6	SHAFT
4	SHRD27-1	016 652 0667 4	CAP
5	SHRD28	016 652 0648 7	CAP
6	SKMD100KY1Z	016 800 2920 8	CABINET
7 Ⓚ	SGXD1361KE00	016 846 3563 1	FRONT PANEL
7 Ⓢ	SGXD1361SW00	016 846 3564 0	FRONT PANEL
8	SHRD29	016 652 0643 2	FRAME
9	SBCD260	016 702 6735 8	BUTTON
10	SHRD30-1	016 652 0671 8	SPACER
11	SUSD59-1		SPRING
12	SHRD31	016 652 0641 4	FRAME
13	SBCD250	016 702 6740 1	BUTTON
14	SUSD47	016 726 0853 5	SPRING
15	SHRD32	016 652 0674 5	SPACER
16	SBCD240	016 702 6741 0	BUTTON
17	SGUD130-1	016 842 1530 8	PANEL
18	SBDD5	016 700 1924 5	KNOB
19	SBDD7	016 700 1926 3	KNOB
20	SUSD48-1		SPRING
21	SHRD26	016 652 0650 3	SPACER
22 Ⓚ (E, EG)	SYULXP5-KE	016 802 2065 2	BOTTOM COVER ASS'Y
22 Ⓚ (EK)	SYULXP5-KEK		BOTTOM COVER ASS'Y
22 Ⓚ (M)	YULXP5-KM	016 802 2064 3	BOTTOM COVER ASS'Y
22 Ⓚ (OTHERS)	SYULXP5-KMC		BOTTOM COVER ASS'Y
22 Ⓚ (XA)	SYULXP5-KXA		BOTTOM COVER ASS'Y
22 Ⓢ (E, EG)	SYULXP5-SE	016 802 2069 8	BOTTOM COVER ASS'Y
22 Ⓢ (EK)	SYULXP5-SEK		BOTTOM COVER ASS'Y
22 Ⓢ (M)	SYULXP5-SM	016 802 2063 4	BOTTOM COVER ASS'Y
22 Ⓢ (OTHERS)	SYULXP5-SMC		BOTTOM COVER ASS'Y
22 Ⓢ (XA)	SYULXP5-SXA		BOTTOM COVER ASS'Y
22-1	SGHD54	016 653 1097 7	RUBBER
22-2	SMXD16	016 600 0513 1	SHIELD SHEET
23	SUALXP5-SM	016 802 2046 5	CHASSIS ASS'Y
23-1	SMXD15	016 600 0516 8	SHIELD SHEET
24	SUSD45-1		SPRING
25	SUSD46	016 726 0867 9	SPRING
26	SJSD13		CONNECTOR, DC IN
27	SJJD10		JACK, PHONES
28	SJJD12		JACK, REMOTE CONTROL
29	RBT207ZA-0	015 700 3065 3	DIAL, LEVEL CONTROL
30	SJSD14	003 400 7443 7	CONNECTOR, DC IN
31	SJJD10		JACK, LINE OUT
33	SMZD2	016 601 0586 9	PLATE
CONNECTORS			
61	EMCS0252B		CONNECTOR (CN103, CN405)
62	EMCS0352B		CONNECTOR (CN702)
63	SJSD1108		CONNECTOR (CN102)
64	SJSD0908		CONNECTOR (CN801)
65	SJSD0408		CONNECTOR (CN101)

Ref. No.	Part No.	Part Code	Description
TRAVERS DECK			
41	SIRD24E		TURNTABLE ASS'Y
42	SIRD21E	016 630 1775 9	TRAVERSE BASE
43	SHGD50	016 653 1085 1	RUBBER
44	SHGD51	016 653 1086 0	RUBBER
45	SOMD10E-1	003 453 0341 5	ROTOR ASS'Y
46	SXPD580		SPINDLE P.C.B. ASS'Y
47	SDGD22E-1	016 745 0211 6	GEAR ASS'Y
47-1	SDGD21E	002 310 2330 4	MOTOR ASS'Y
47-2	SDGD22	016 745 0212 5	GEAR
47-3	SDGD24	016 745 0215 2	GEAR
47-4	SDGD23	016 745 0213 4	GEAR
47-5	SUWD30-1	016 726 0877 7	SPRING
47-6	SUSD41	016 726 0876 8	SPRING
47-7	SHRD63		SPACER
48 ⚠	S0AD40A	001 271 0693 2	OPTICAL PICK UP
49	SDGD25	016 745 0201 8	GEAR
50	SUXD26	016 634 0132 2	SHAFT
51	SUXD27	016 634 0131 3	SHAFT
52	SUWD27	016 650 5287 2	BRACKET
53	SUWD28	016 650 5286 3	BRACKET
54	SHRD24	016 652 0647 8	ROLLER
55	SUSD35-1	016 726 0869 7	SPRING
SCREWS, WASHERS AND NTS			
N1 Ⓢ	XQN17+A4FN		SCREW
N1 Ⓚ	XQN17+A4FZ		SCREW
N2	XTN17+4J	005 501 2838 4	SCREW
N3	XTN17+6JFYR		SCREW
N4	XTN2+5J		SCREW
N5	XTN2+A35JFZ		SCREW
N6	SNSD16	016 643 0980 9	SCREW
N7	XQN2+A2		SCREW
N8	XQN17+A2		SCREW
N9	XTS2+A6JFZ		SCREW
N10	SNWD1	005 513 3549 0	WASHER
N11	SNSD4	005 500 4875 6	SCREW
N12	XWC2AV		WASHER
N13	XNF2BBN	005 507 1328 5	NUT
N14	XTN2+E8JFN		SCREW
N16	SHWD1	005 513 3548 1	WASHER
N17	SNSD20		SCREW
N18	XQN17+C3FZ	005 500 4606 5	SCREW
N19	XQN17+A4FYR		SCREW
N20	XTS2+A13JW		SCREW
N21	XQN2+A15FN		SCREW
N23	SHDD2	016 652 0665 6	SCREW

Ref. No.	Part No.	Part Code	Description
PACKINGS			
P1 Ⓢ (M)	SPND136		CARTON BOX
P1 Ⓢ (MC)	SPND137		CARTON BOX
P1 Ⓢ (OTHERS)	SPND145		CARTON BOX
P1 Ⓢ (EF)	SPND146		CARTON BOX
P1 Ⓚ (M)	SPND148	016 971 4750 6	CARTON BOX
P1 Ⓚ (MC)	SPND149		CARTON BOX
P1 Ⓚ (OTHERS)	SPND150	016 971 4749 9	CARTON BOX
P1 Ⓚ (EF)	SPND151	016 971 4753 3	CARTON BOX
P2	SPSD77		PAD
P3	SPSD14	016 977 2843 0	SHEET
P5	SPSD54	016 977 3123 1	CARTON BOX, AC ADAPTOR
P6 (EK, XL)	SPSD24	016 977 2957 1	PAD, AC ADAPTOR
P6 (OTHERS)	SPSD33	016 977 2913 3	PAD, AC ADAPTOR
P6 (XA, XB, PA) (PE, PC)	SPSD56		PAD, AC ADAPTOR
P7	XZB15X17A02		POLYETHYLENE BAG, BATTERY
P8	XZB20X28A02	016 978 0485 5	POLYETHYLENE BAG
P9	SPDD1R-1	016 978 0482 8	POLYETHYLENE BAG
ACCESSORYES			
A1 (M)	SQUD125	016 983 4864 1	INSTRUCTION BOOK
A1 (EG, EF) (EI)	SQUD127	016 983 4875 8	INSTRUCTION BOOK
A1 (EI)	SQUD129		INSTRUCTION BOOK
A1 (EK)	SQUD130	016 983 4889 2	INSTRUCTION BOOK
A1 (E, EB, EH)	SQULXP5-KE	016 983 4880 1	INSTRUCTION BOOK
A1 (MC)	SQULXP5-SMC		INSTRUCTION BOOK
A1 (PA, PE, PC)	SQULXP5-SPA	016 983 4883 8	INSTRUCTION BOOK
A1 (XL, XA, XB)	SQULXP5-SXL		INSTRUCTION BOOK
A2 ⚠ (E)	SH-CDA5U-E	016 914 0011 1	AC ADAPTOR
A2 ⚠ (EK)	SH-CDA5U-EK	016 914 0016 6	AC ADAPTOR
A2 ⚠ (EG, EB, EH) (EF, EI)	SH-CDA5U-E5		AC ADAPTOR
A2 ⚠ (M)	SH-CDA5U-M	016 914 0010 2	AC ADAPTOR
A2 ⚠ (MC)	SH-CDA5U-MC		AC ADAPTOR
A2 ⚠ (XA, PA, PE) (PC)	SH-CDA5U-X	016 914 0012 0	AC ADAPTOR
A2 ⚠ (XB)	SH-CDA5U-XB	016 914 0014 8	AC ADAPTOR
A2 ⚠ (XL)	SH-CDA5U-XL		AC ADAPTOR
A3 (EK)	SH-CDB5U-EK		BATTERY
A3 (OTHERS)	SH-CDB5U-M	016 952 0097 5	BATTERY
A3 (MC, EF)	SH-CDB5U-MC		BATTERY
A4	SPDD8	016 918 0603 3	SOFT CASE
A5	SJPD5-1	003 492 6511 2	PHONO OUTPUT CORD
A6 EXCEPT (M) (MC, PA, PE)	SJP2201-1		CORD, REMOTE CONTROL
A7 ⚠ (XA, XB, PA) (PE, PC) ONLY	RJP120ZBS-H	003 402 1437 9	PLUG
A8 (M, MC, XL, XA) (XB) ONLY	SH-HP5	016 915 0064 3	STEREO EARPHONES
A9	SHGD100		RUBBER, FOOT

■ PACKING

AC adaptor

•AC adaptor

• For [M] and [MC]

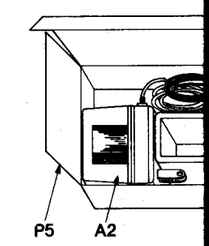

• For [PC] area

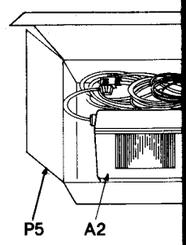

mns specify the

ed for all areas.
only.
only.
ed are used for

Description
IODE
IODE
IODE
IODE
IODE
ALL ELEMENT
ARIABLE RESISTOR
ARIABLE RESISTOR
ARIABLE RESISTOR
ARIABLE RESISTOR
ARIABLE RESISTOR
ARIABLE RESISTOR
ARIABLE RESISTOR
ARIABLE RESISTOR
OIL
OIL
OIL
OIL
OIL
OIL
6.9344MHZ
ISPLAY
WITCH, LASER
WITCH, REST
WITCH, PLAY/PAUSE
WITCH, OPERATION
WITCH, POWER/FILTER

Description
OTTOM COVER ASS'Y
OTTOM COVER ASS'Y
OTTOM COVER ASS'Y
OTTOM COVER ASS'Y
OTTOM COVER ASS'Y
OTTOM COVER ASS'Y
OTTOM COVER ASS'Y
UBBER
HIELD SHEET
HASSIS ASS'Y
HIELD SHEET
PRING
PRING
ONNECTOR, DC IN
ACK, PHONES
ACK, REMOTE CONTROL
AL, LEVEL CONTROL
ONNECTOR, DC IN
ACK, LINE OUT
LATE
ONNECTOR (CN103, CN405)
ONNECTOR (CN702)
ONNECTOR (CN102)
ONNECTOR (CN801)
ONNECTOR (CN101)

Main PCB Board
Part No. SXCP550

Ref. No.	Part No.	Part Code	Description
TRAVERS DECK			
41	SIRD24E		TURNTABLE ASS'Y
42	SIRD21E	016 630 1775 9	TRAVERSE BASE
43	SHGD50	016 653 1085 1	RUBBER
44	SHGD51	016 653 1086 0	RUBBER
45	SOMD10E-1	003 453 0341 5	ROTOR ASS'Y
46	SXPD580		SPINDLE P.C.B. ASS'Y
47	SDGD22E-1	016 745 0211 6	GEAR ASS'Y
47-1	SDGD21E	002 310 2330 4	MOTOR ASS'Y
47-2	SDGD22	016 745 0212 5	GEAR
47-3	SDGD24	016 745 0215 2	GEAR
47-4	SDGD23	016 745 0213 4	GEAR
47-5	SUWD30-1	016 726 0877 7	SPRING
47-6	SUSD41	016 726 0876 8	SPRING
47-7	SHRD63		SPACER
48 ⚠	SOAD40A	001 271 0693 2	OPTICAL PICK UP
49	SDGD25	016 745 0201 8	GEAR
50	SUXD26	016 634 0132 2	SHAFT
51	SUXD27	016 634 0131 3	SHAFT
52	SUWD27	016 650 5287 2	BRACKET
53	SUWD28	016 650 5286 3	BRACKET
54	SHRD24	016 652 0647 8	ROLLER
55	SUSD35-1	016 726 0869 7	SPRING

Ref. No.	Part No.	Part Code	Description
SCREWS,WASHERS AND NTS			
N1 Ⓢ	XQN17+A4FN		SCREW
N1 Ⓚ	XQN17+A4FZ		SCREW
N2	XTN17+4J	005 501 2838 4	SCREW
N3	XTN17+6JFYR		SCREW
N4	XTN2+5J		SCREW
N5	XTN2+A35JFZ		SCREW
N6	SNSD16	016 643 0980 9	SCREW
N7	XQN2+A2		SCREW
N8	XQN17+A2		SCREW
N9	XTS2+A6JFZ		SCREW
N10	SNWD1	005 513 3549 0	WASHER
N11	SNSD4	005 500 4875 6	SCREW
N12	XWC2AV		WASHER
N13	XNF2BBN	005 507 1328 5	NUT
N14	XTN2+E8JFN		SCREW
N16	SHWD1	005 513 3548 1	WASHER
N17	SNSD20		SCREW
N18	XQN17+C3FZ	005 500 4606 5	SCREW
N19	XQN17+A4FYR		SCREW
N20	XTS2+A13JW		SCREW
N21	XQN2+A15FN		SCREW
N23	SHDD2	016 652 0665 6	SCREW

Ref. No.	Part No.	Part Code	Description
PACKINGS			
P1 Ⓢ (M)	SPND136		CARTON BOX
P1 Ⓢ (MC)	SPND137		CARTON BOX
P1 Ⓢ (OTHERS)	SPND145		CARTON BOX
P1 Ⓢ (EF)	SPND146		CARTON BOX
P1 Ⓚ (M)	SPND148	016 971 4750 6	CARTON BOX
P1 Ⓚ (MC)	SPND149		CARTON BOX
P1 Ⓚ (OTHERS)	SPND150	016 971 4749 9	CARTON BOX
P1 Ⓚ (EF)	SPND151	016 971 4753 3	CARTON BOX
P2	SPSD77		PAD
P3	SPSD14	016 977 2843 0	SHEET
P5	SPSD54	016 977 3123 1	CARTON BOX, AC ADAPTOR
P6 (EK, XL)	SPSD24	016 977 2957 1	PAD, AC ADAPTOR
P6 (OTHERS)	SPSD33	016 977 2913 3	PAD, AC ADAPTOR
P6 (XA, XB, PA) (PE, PC)	SPSD56		PAD, AC ADAPTOR
P7	XZB15X17A02		POLYETHYLENE BAG, BATTERY
P8	XZB20X28A02	016 978 0485 5	POLYETHYLENE BAG
P9	SPDD1R-1	016 978 0482 8	POLYETHYLENE BAG
ACCESSORYES			
A1 (M)	SQUD125	016 983 4864 1	INSTRUCTION BOOK
A1 (EG, EF) (EI)	SQUD127	016 983 4875 8	INSTRUCTION BOOK
A1 (EI)	SQUD129		INSTRUCTION BOOK
A1 (EK)	SQUD130	016 983 4889 2	INSTRUCTION BOOK
A1 (E, EB, EH)	SQULXP5-KE	016 983 4880 1	INSTRUCTION BOOK

Ref. No.	Part No.	Part Code	Description
A1 (MC)	SQULXP5-SMC		INSTRUCTION BOOK
A1 (PA, PE, PC)	SQULXP5-SPA	016 983 4883 8	INSTRUCTION BOOK
A1 (XL, XA, XB)	SQULXP5-SXL		INSTRUCTION BOOK
A2 ⚠ (E)	SH-CDA5U-E	016 914 0011 1	AC ADAPTOR
A2 ⚠ (EK)	SH-CDA5U-EK	016 914 0016 6	AC ADAPTOR
A2 ⚠ (EG, EB, EH) (EF, EI)	SH-CDA5U-E5		AC ADAPTOR
A2 ⚠ (M)	SH-CDA5U-M	016 914 0010 2	AC ADAPTOR
A2 ⚠ (MC)	SH-CDA5U-MC		AC ADAPTOR
A2 ⚠ (XA, PA, PE) (PC)	SH-CDA5U-X	016 914 0012 0	AC ADAPTOR
A2 ⚠ (XB)	SH-CDA5U-XB	016 914 0014 8	AC ADAPTOR
A2 ⚠ (XL)	SH-CDA5U-XL		AC ADAPTOR
A3 (EK)	SH-CDB5U-EK		BATTERY
A3 (OTHERS)	SH-CDB5U-M	016 952 0097 5	BATTERY
A3 (MC, EF)	SH-CDB5U-MC		BATTERY
A4	SPDD8	016 918 0603 3	SOFT CASE
A5	SJPD5-1	003 492 6511 2	PHONO OUTPUT CORD
A6 EXCEPT (M) (MC, PA, PE)	SJP2201-1		CORD, REMOTE CONTROL
A7 ⚠ (XA, XB, PA) (PE, PC) ONLY	RJP120ZBS-H	003 402 1437 9	PLUG
A8 (M, MC, XL, XA) (XB) ONLY	SH-HP5	016 915 0064 3	STEREO EARPHONES
A9	SHGD100		RUBBER, FOOT

■ PACKING

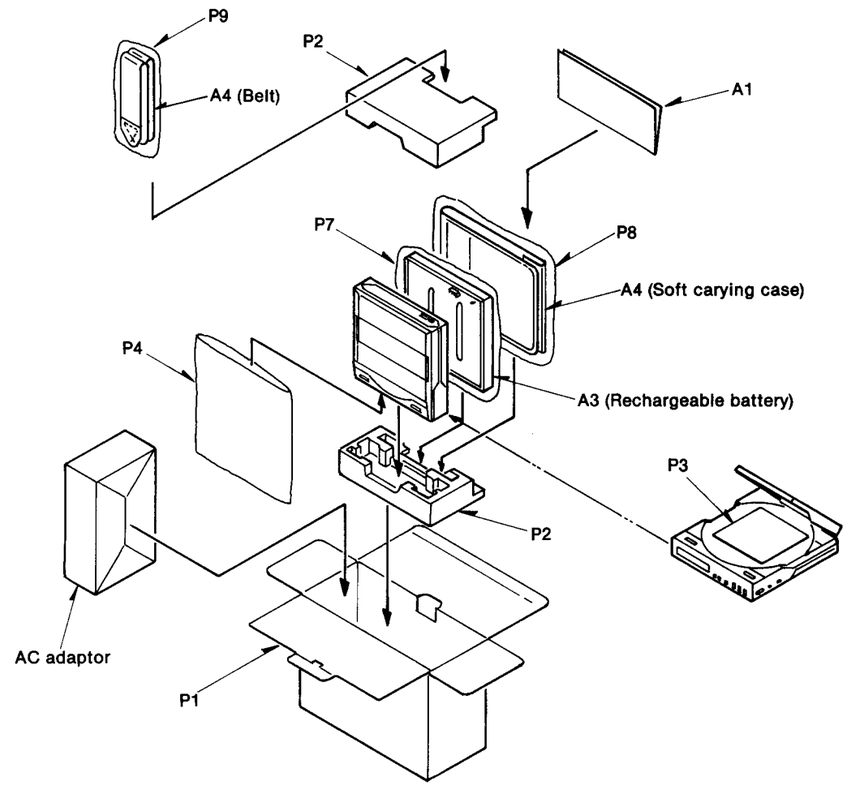

•AC adaptor

• For [M] and [MC] areas

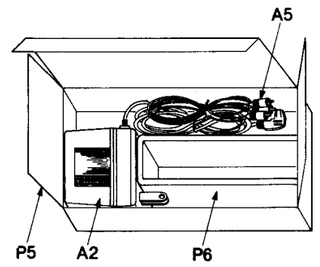

• For [EK] and [XL] areas

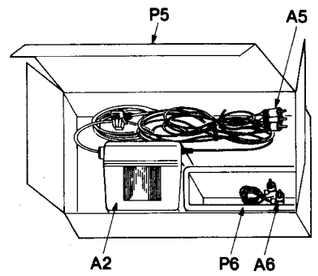

• For [XA] and [XB] areas

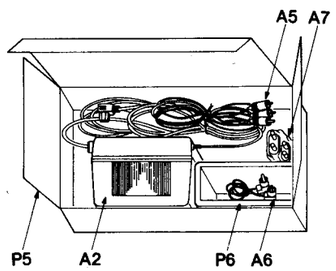

• For [PC] area

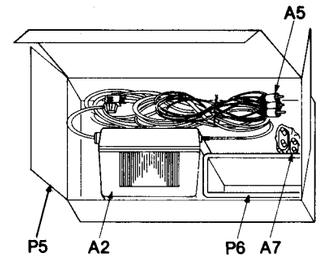

• For others

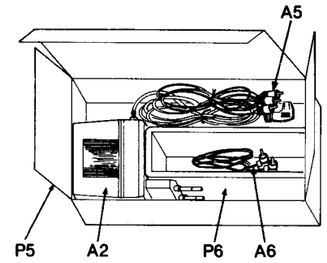

■ PRINTED CIRCUIT BOARD

• Parts side

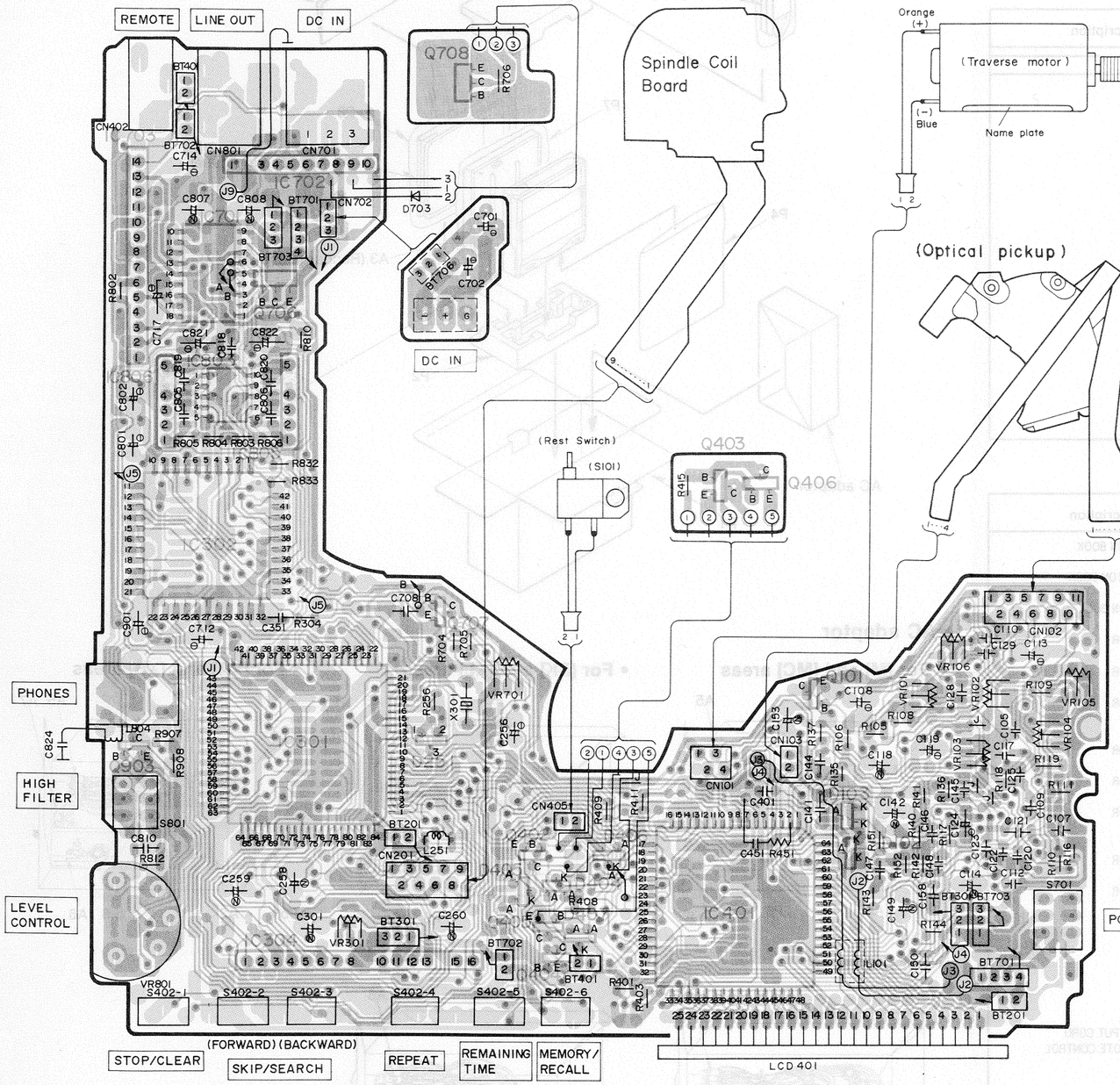

• Solder side

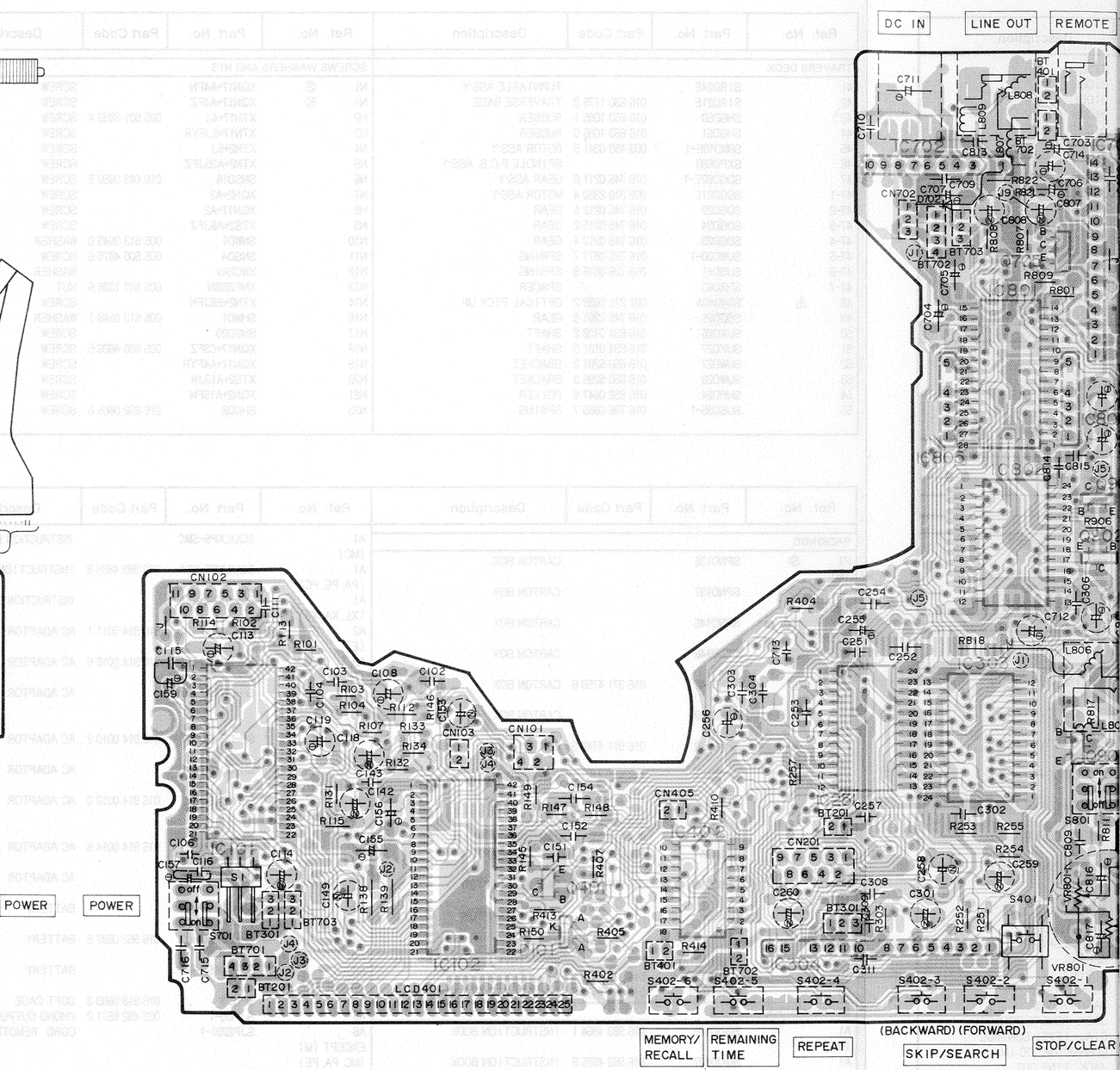

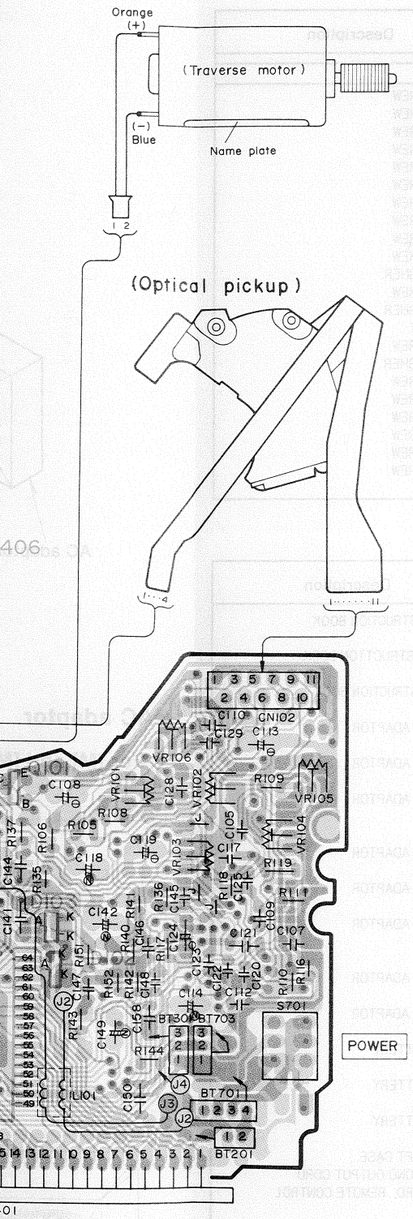

• Solder side

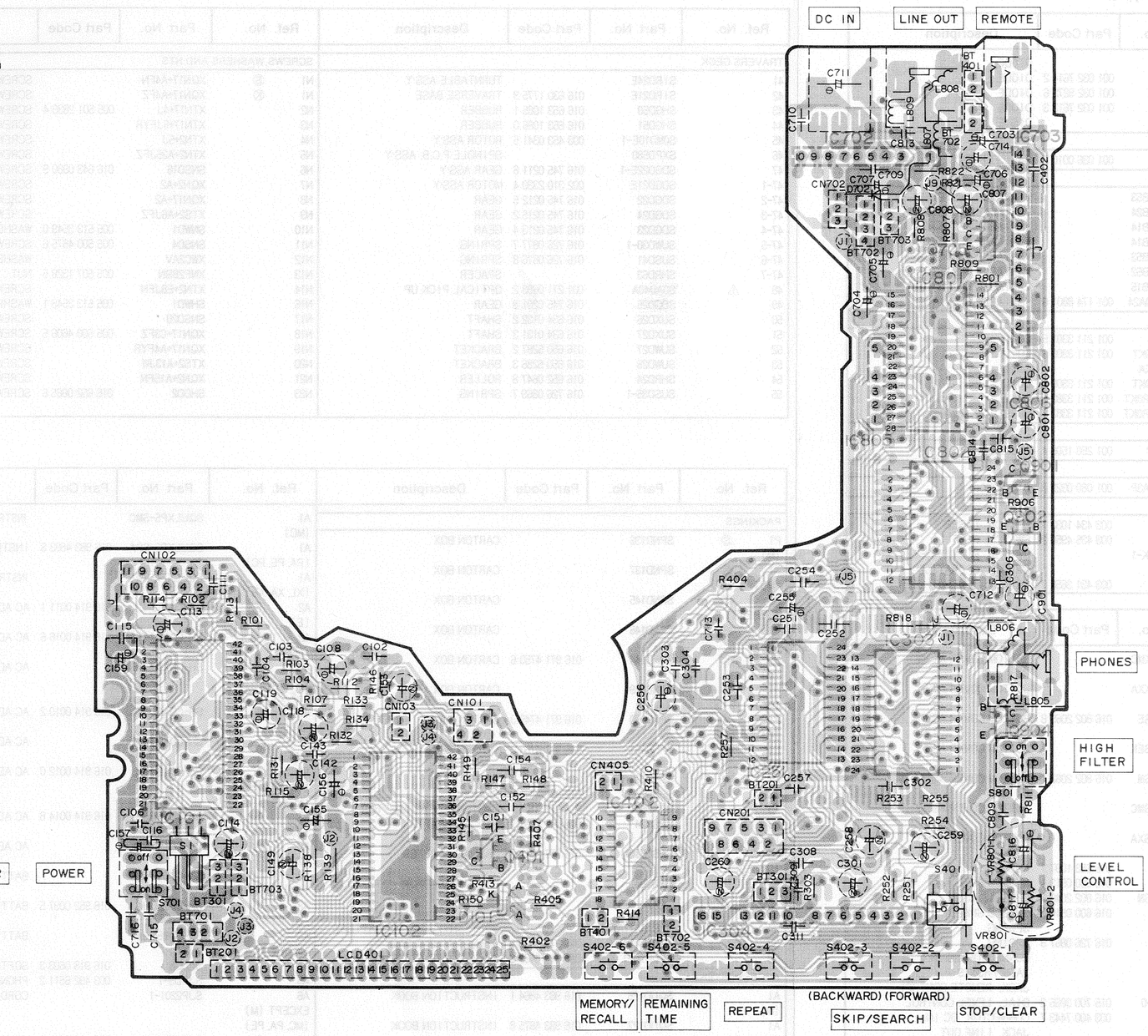

■ SCHEMATIC DIAGRAM

(This schematic diagram may be modified at any time with the development of new technology.)

Notes:

1. **S1** : Laser ON/OFF switch in "**off**" position. (It turns "**on**" with disc holder closed.)
2. **S101** : Rest switch in "**off**" position. (It turns "**on**" when optical pickup comes to innermost periphery.)
3. **S401** : Play/pause switch.
4. **S402-1** : Stop/clear clear switch.
5. **S402-2** : Skip/search (Forward) switch.
6. **S402-3** : Skip/serach (Backward) switch.
7. **S402-4** : Repeat switch.
8. **S402-5** : Remaining time switch.
9. **S402-6** : Memory/recall switch.
10. **S701** : Power switch in "**on**" position.
11. **S801** : High filter switch in "**off**" position.
12. The voltage value and waveforms are the reference voltage of this unit measured by DC electronic voltmeter (high impedance) and oscilloscope on the basis of GND terminal (DC IN Jack).
    Accordingly, there may arise some error in the voltage values and waveforms depending upon the internal impedance of the tester or measuring unit.
    * The parenthesized is the voltage for test disc (1kHz, L+R, 0dB) in play mode, and the other, for no disc in stop mode.
    * AC adaptor (SH-CDA5U) is used for power supply.
13. ——— : Positive voltage lines and negative voltage lines.
    ▒▒▒ : Audio signal lines
14. Important safety notice:
    Components identified by ⚠ mark have special characteristics important for safety. When replacing any of these components, use only manufacturer's specified parts.

* Caution !

IC and LSI are sensitive to static electricity.
Secondary trouble can be prevented by taking care during repair.

* Cover the parts boxes made of plastics with aluminum foil.
* Ground the soldering iron.
* Put a conductive mat on the work table.
* Do not touch the legs of IC or LSI with the fingers directly.

• Terminal guide of IC's, transistors and diodes

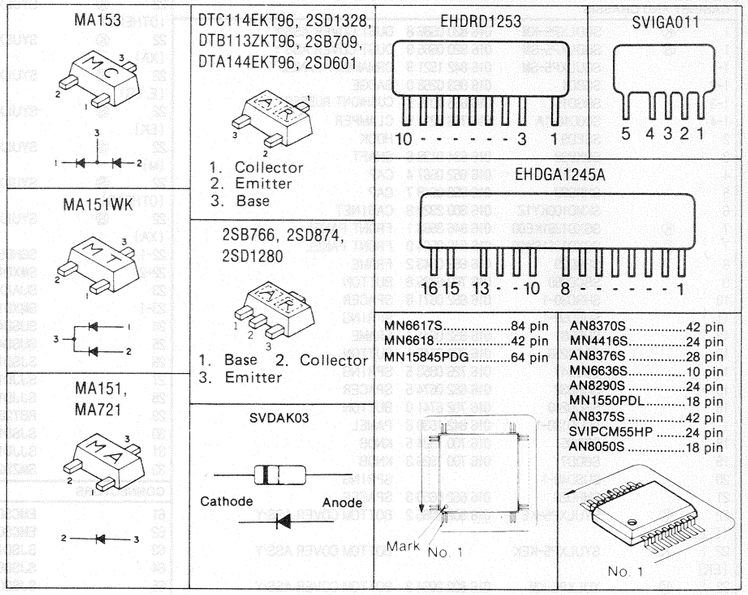

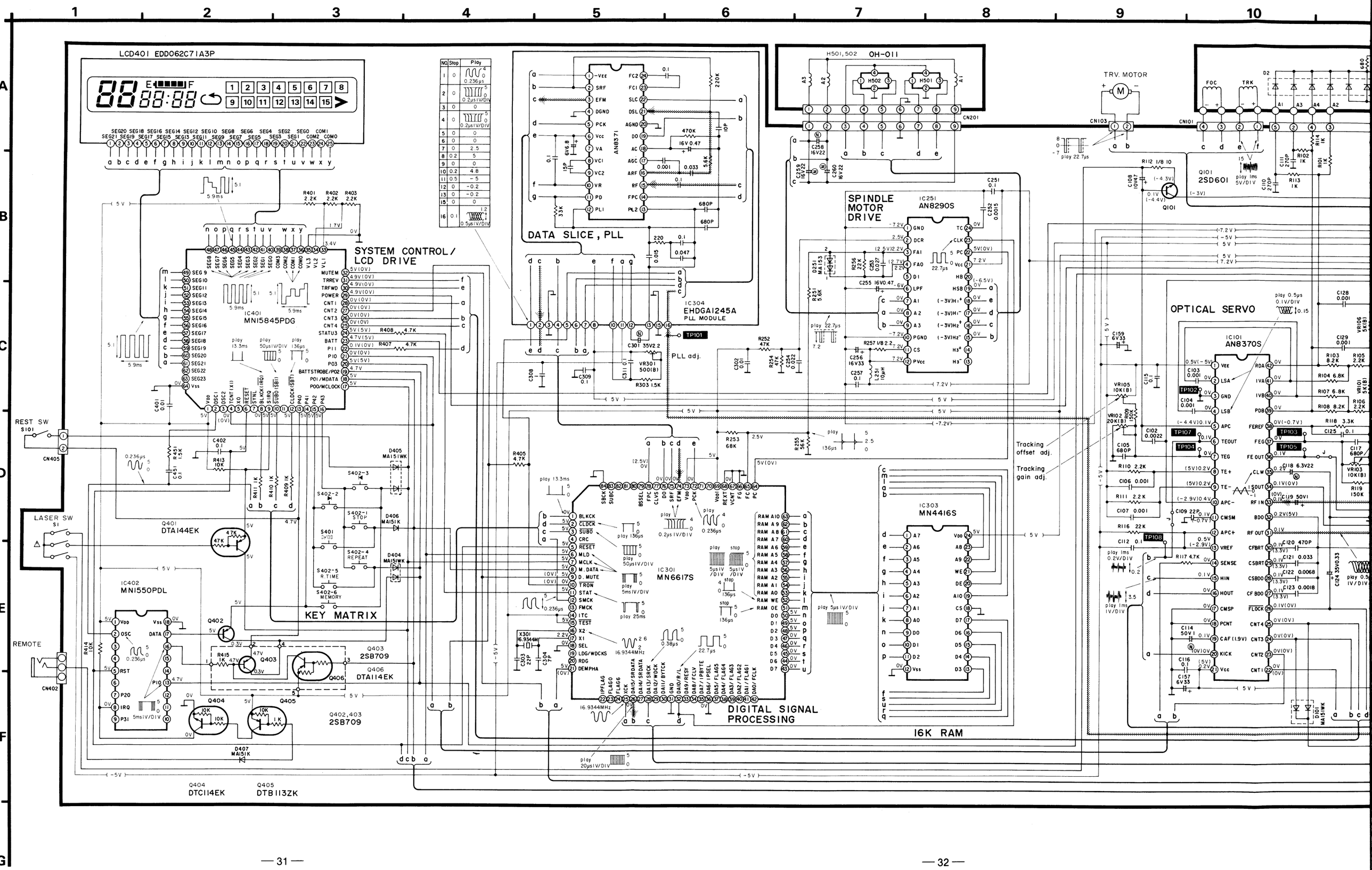
LCD401 EDD062C71A3P
SYSTEM CONTROL/ LCD DRIVE
IC401 MN15845PDG
DATA SLICE, PLL
IC304 EHDGA1245A PLL MODULE
PLL adj.
SPINDLE MOTOR DRIVE
IC251 AN8290S
TRV. MOTOR
OPTICAL SERVO
IC101 AN8370S
Tracking offset adj.
Tracking gain adj.
REST SW S101
LASER SW S1
REMOTE
KEY MATRIX
IC402 MN1550PDL
Q401 DTA144EK
Q402 Q403 2SB709
Q404 DTC114EK
Q405 DTB113ZK
Q406 DTA114EK
Q402,403 2SB709
IC301 MN6617S
DIGITAL SIGNAL PROCESSING
IC303 MN4416S
16K RAM

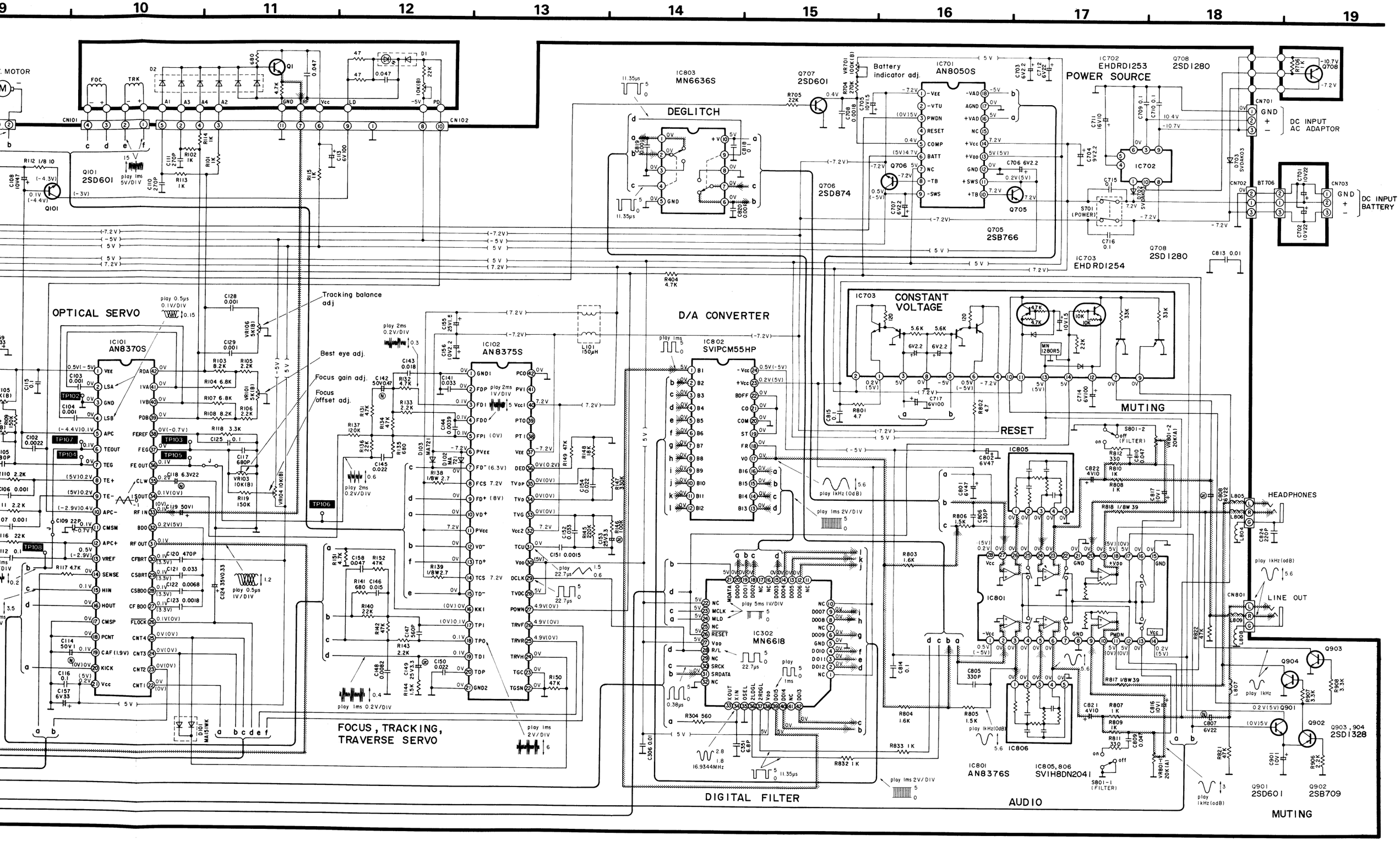
OPTICAL SERVO
IC101 AN8370S
IC102 AN8375S
D/A CONVERTER
IC802 SVIPCM55HP
DEGLITCH
IC803 MN6636S
Q707 2SD601
IC701 AN8050S
Battery indicator adj.
IC702 EHDRD1253
POWER SOURCE
Q708 2SD1280
IC703 EHDRD1254
Q706 2SD874
Q705 2SB766
Q101 2SD601
CONSTANT VOLTAGE
MUTING
RESET
Tracking balance adj
Best eye adj.
Focus gain adj.
Focus offset adj.
FOCUS, TRACKING, TRAVERSE SERVO
IC302 MN6618
DIGITAL FILTER
IC801 AN8376S
IC805,806 SVIH8DN2041
AUDIO
HEADPHONES
LINE OUT
DC INPUT AC ADAPTOR
DC INPUT BATTERY
Q903,904 2SD1328
Q901 2SD601
Q902 2SB709
MUTING

■ BLOCK DIAGRAM

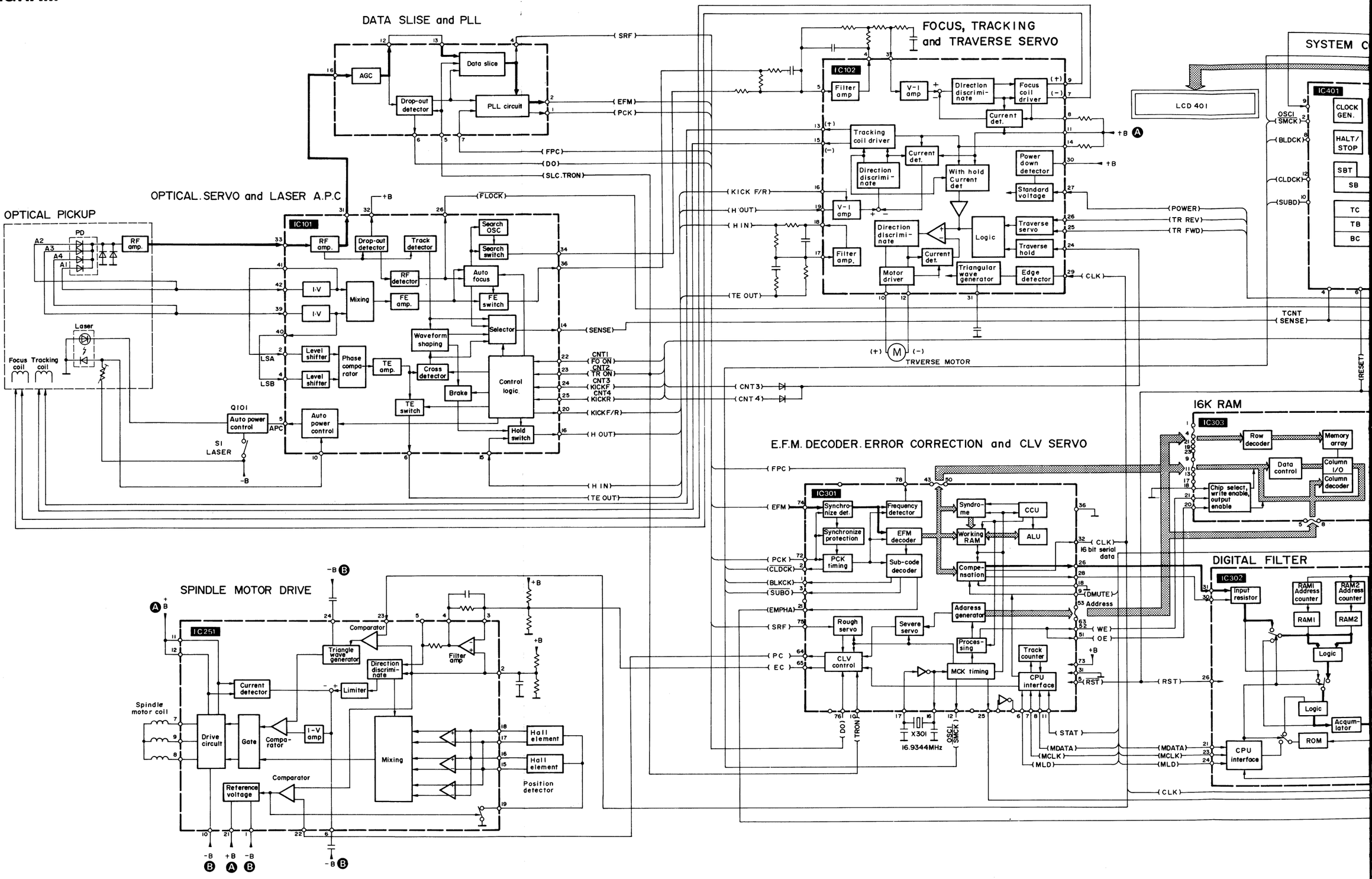

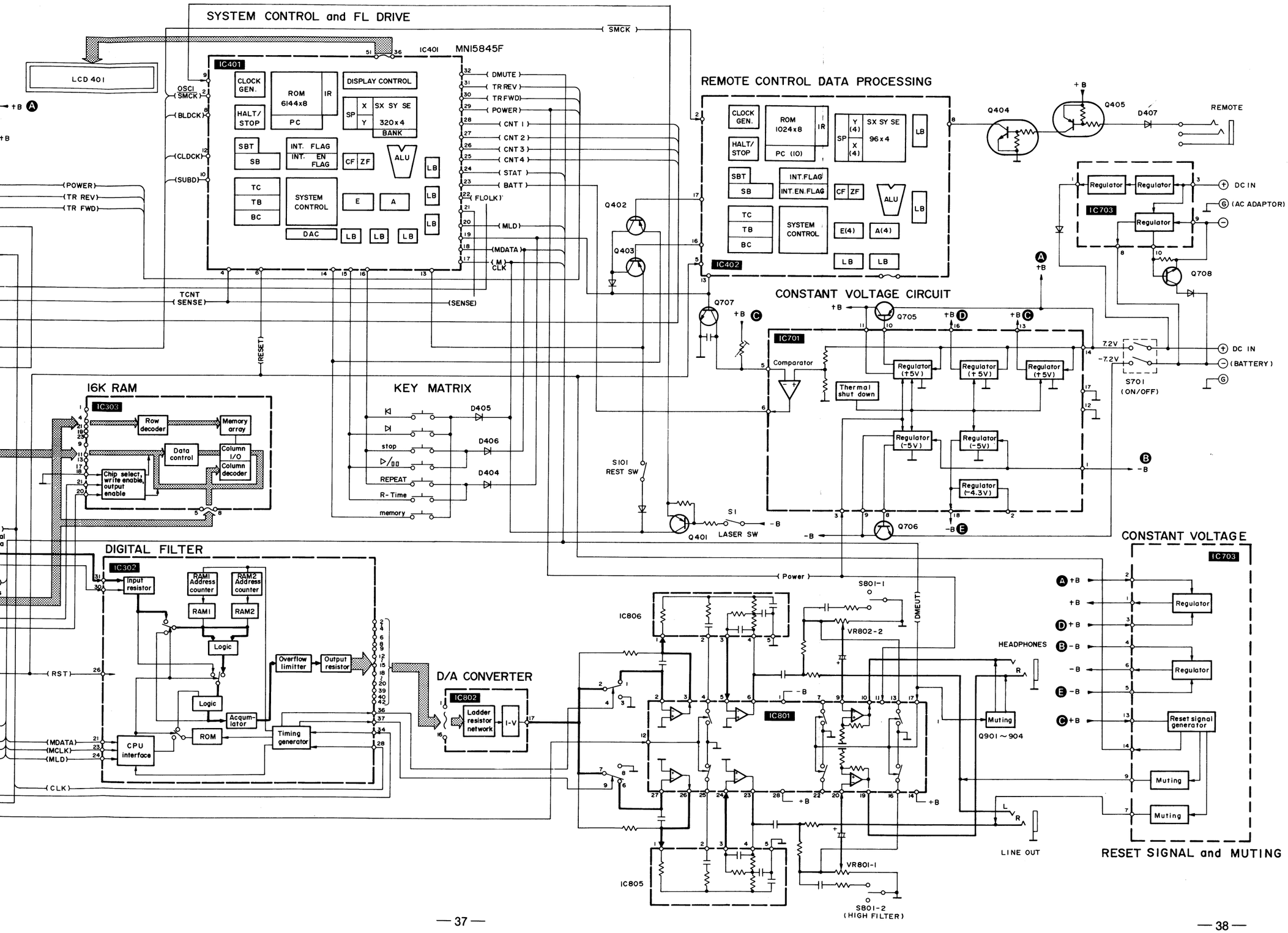

Printed in Japan
860809800 Ⓗ AM/HS